Panasonic

1997 Semiconductor Selection Guide

Microcomputers, Memories, ASICs, Bipolar ICs, Discrete Semiconductors

SEMICONDUCTOR PRODUCTS

MATSUSHITA ELECTRONICS CORPORATION

⚠ Caution for Safety

⚠ **DANGER**	Do not touch or look at a laser beam directly. It is in danger of a injury to eyesight or outer skin in the worst case.

Request for your special attention and precautions in using the technical information and semiconductors described in this book

1. An export permit needs to be obtained from the competent authorities of the Japanese Government if any of the products or technologies described in this book and controlled under the "Foreign Exchange and Foreign Trade Control Law" is to be exported or taken out of Japan.

2. The technical information described in this book is limited to showing representative characteristics and applied circuit examples of the products. It does not constitute the warranting of industrial property, the granting of relative rights, or the granting of any license.

3. The products described in this book are intended to be used for standard applications or general electronic equipment (such as office equipment, communications equipment, measuring instruments and household appliances).
   Consult our sales staff in advance for information on the following applications:
   - Special applications (such as for airplanes, aerospace, automobiles, traffic control equipment, combustion equipment, life support systems and safety devices) in which exceptional quality and reliability are required, or if the failure or malfunction of the products may directly jeopardize life or harm the human body.
   - Any applications other than the standard applications intended.

4. The products and product specifications described in this book are subject to change without notice for reasons of modification and/or improvement. At the final stage of your design, purchasing or use of the products, therefore, ask for the most up-to-date Product Standards in advance to make sure that the latest specifications satisfy your requirements.

5. When designing your equipment, comply with the guaranteed values, in particular those of maximum rating, the range of operating power supply voltage and heat radiation characteristics. Otherwise, we will not be liable for any defect which may arise later in your equipment.
   Even when the products are used within the guaranteed values, redundant design is recommended, so that such equipment may not violate relevant laws or regulations because of the function of our products.

6. When using products for which vacuum packing is required, observe the conditions (including shelf life and after-unpacking stand-by time) agreed upon when specification sheets are individually exchanged.

7.

If you have any inquiries or questions about this book or our semiconductors, please contact one of our sales offices listed at the back of this book or Matsushita Electronics Corporation's Sales Department.

Contents

Integrated Circuits (MOS LSIs)

Type No.	Page
MOS LSI	
○ MN101C01A	46
▲ MN101C01C	46
▲ MN101C01D	46
▲ MN101C025	46
▲ MN101C027	46
▲ MN101C03A	46
▲ MN101C037	46
MN1020003	47
MN1020004A	47
MN1020004AFB	47
MN1020012A	47
▲ MN1020012AFA	47
MN1020015	47
MN1020017	47
MN1020019	47
MN1020215	47
MN1020219	47
MN1020407	47
MN1020415	47
MN1020419	47
MN1020701	47
MN1020705	47,88,90
MN1020715	47
MN1020817	47
MN1020819	47
MN1021213	47
MN1021617	47
MN102L230	47
MN102P0705	88
MN102P081P	47
MN102P1213	47
▲ MN103000	47
MN12510	50
MN1256	50
MN1258	50
MN12861	50
MN12862	50
MN1380	50
MN13801	50
MN13802	50
MN1381	50
MN13811	50
MN13812	50
MN1382	50
MN13821	50
MN13822	50
▲ MN150120	43
MN150202	43
▲ MN150222	43
MN150401	43
MN150402	43
MN150404	43
MN150409	43
MN150413	43
MN150414	43
MN150602	43
MN150609	43
▲ MN15P0802	43
MN150804	43
MN150810	43
MN150813	43
MN150814	43
▲ MN150831	43
MN150832	43
MN150837	43
MN151233	43

Type No.	Page
MN151614	43
▲ MN151630	43
MN152810	43
MN152811	43
MN1551A2	43
MN155201	43
MN155202	43
MN155402	43
MN15P5402	43
MN158851A	43
MN170401	44
MN170801	44
MN170803A	44
MN170804	44
MN170805	44
MN171202	44
MN171601A	44
MN171602	44
MN171603	44
MN171604	44
MN171605	44
MN171608	44
MN171609	44
MN172412	44
MN173222	44
MN17P1601	44
MN17P1602	44
MN17P1603	44
MN17P1604	44
MN17P1605	44
MN17P1608	44
MN17P3212	44
▲ MN17P3222	44
MN1860003	46
MN1860004	46
MN1866405	46
MN1866406	46
MN18P66405	46
MN1871215	45
MN187124	45
MN1871610	45
MN1871618	44
MN1871631	45
MN187164	45
MN1871675	45
MN187204	45
MN1872410	45
MN1872423	44
MN1872432	45
MN187244	45
MN1872457	45
MN1873210	45
MN1873223	44
MN187324	45
MN1873265	45
MN1874023	44
MN1874033	45
MN1874823	44
MN1874876	45
MN1876476	45
MN187818	44
MN1880023	46
MN1880024	46
MN18806	46
MN188161	45
MN188166	45
MN1882010	45
MN1882414	46

Type No.	Page
MN1882417	45
MN1882421	46
MN188321	45
MN1883210	46
MN1883210(A)	46
MN1883214	46
MN1883220	46
MN1884820	46
MN1884824	46
MN18888THW	96
MN18P66405	46
▲ MN18P73210	45
MN18P7324	45
MN18P73257	45
▲ MN18P76423	44
MN18P76476	45
▲ MN18P82410(A)	46
MN18P8321	43
MN18P83210	45
▲ MN18P83214	46
MN18P83217	45
MN18P83220	46
▲ MN18P83221	46
MN18P8326	45
MN18P86420	46
▲ MN18P86424	46
MN18P888	45
MN1900003	48
MN1900402	48
MN1900403	48
MN1900011	48
MN1901012	48
MN1901611	48
MN19041A	48
MN19091A	48
MN1920001	48
MN1920802	48
MN1920811	48
MN1920813	48
MN1921814	48
MN1921816	48
MN1932801	48
▲ MN1933211	48
MN19411	48
MN19412A	48
▲ MN19413	48
MN195001	104
▲ MN195902	105
● MN3000 Series	68
MN3003	68
MN3004	68
MN3005	68
MN3006	68
MN3007	68
MN3008	68
MN3009	68
MN3010	68
MN3011	68
MN3012	68
MN3101	68
MN3104	66
MN3110S/SA	92
MN3111H	92
MN3112SA	92
MN3113F	92

Type No.	Page
● MN3200 Series	68
MN3204	68
MN3205	68
MN3206	68
MN3207	68
MN3208	68
MN3209	68
MN3210	68
MN3214	68
MN3102	68
● MN3300 Series	68
MN3304	68
MN3305	68
MN3306	68
MN3307	68
MN3308	68
MN3309	68
MN3105	68
MN35502	98
MN35503	98
MN3803S	66
MN3804CS	67
MN3804YS	67
MN3805CS	67
MN3805YS	67
MN3814/S	66
MN3822S	67
MN3825S	67
MN3826S	67
MN3830S	66
MN3858S	66
MN3859S	66
MN3860SA	67
MN3866S	66
MN38662S	66
MN38663S	66
MN38664S	66
MN3867S	66
MN3870S	66
MN3880S	67
MN3881S	67
MN3882S	67
MN3883S	67
MN5117	91
MN5126	91
MN5128	91
MN5137	91
MN5139	91
MN5150	91
MN5151-1/51H	91
MN5161	91
MN5177	91
MN5179/H	91
MN5181	91
MN5501	50
MN5502	50
MN5520AQ	106
▲ MN5520AC	106
MN5521Q	106
▲ MN5521C	106
▲ MN5522Q	106
▲ MN5522C	106
▲ MN5523	106

Type No.	Page
● MN56000 Series	58
MN56020	58
MN56030	58
MN56050	58
MN56070	58
● MN56A00 Series	58
MN56A25	58
MN56A34	58
MN56A45	58
MN56A57	58
MN56A69	58
● MN56E00 Series	58
MN56E02	58
MN56E03	58
MN56E06	58
MN56E10	58
● MN5AA000 Series	57
MN5AA003	57
MN5AA005	57
MN5AA010	57
MN5AA017	57
MN5AA020	57
MN5AA030	57
MN5AA040	57
MN5AA060	57
MN5AA090	57
MN5AA120	57
MN5AA180	57
● MN5C000 Series	57
MN6095	103
MN6112A/AS	104
MN6114	104
MN6126FA	105
MN6152U	105
MN6153UC	105
MN6155	105
MN6251	103
MN6263	103
MN6280	68,94
MN6460A	98
MN6470	98
MN6474A	98
MN6475A	98
MN647511	98
MN6479A	98
MN6516	68
MN6550B/S	65
MN65523A/S	65
MN65531AS	65
MN65543S	65
MN655431SH	65
MN6556A/S	65
MN6557A/S	65
MN6559S	65
MN6570F	65
MN6570EF	65
MN6570TF	65
MN65701FHP	65
MN657011H	65
MN65702H	65
MN657021F	65
MN65703T	65
MN6571K	65

▲Under development

Type Number List

■ Integrated Circuits (MOS LSIs)

▲Under development

Integrated Circuits (MOS LSIs)

▲Under development

Type Number List

■ Integrated Circuits (MOS LSIs)

△Tentative ▲Under development

Type Number List

■ Integrated Circuits (MOS LSIs)

Type No.	Page
AN90B21/S	77
AN90B22/S	78
AN90B60/S	78
AN90B70/S	78
AN90B81/S	78
AN90B82S	78
● AN90C00 Series	
AN90C10	78
AN90C21	78
AN90C22	78
AN90C23	78
● AN9DX00 Series	
AN9DA00	70
AN9DB00	70
AN9DC00	70
AN9DD00	70
AN9DE00	70
● AN9CX00 Series	
AN9CA00	70
AN9CB00	70
● AN9AX00 Series	
AN9AA00	70

■ Discrete Devices

Transistors

Type No.	Package	Page
2SA683	TO92L	113,121
2SA684	TO92L	113,121
2SA699/A	TO202	117,124
2SA719	TO92	112,121
2SA720/A	TO92	112,121
2SA748	TO220	117,124
2SA777	TO92L	113,121
2SA794/A	TO126	115,125
2SA838	TO92	112,123
2SA879	TO92L	113,122
2SA885	TO126	115,124
2SA886	TO126	115,124
2SA900	TO126	115,125
2SA914	TO126	115,125
2SA921	TO92	112,121
2SA963	TO126	115,124
2SA1018	TO92	112,122
2SA1022	Mini 3P	111,123
2SA1034	Mini 3P	111,121
2SA1035	Mini 3P	111,121
2SA1096/A	TO126	115,124
2SA1110	TO126	115,125
2SA1111	TO220	117,125
2SA1123	TO92	112,121
2SA1124	TO92L	113,121
2SA1127	TO92	112,121
2SA1128	TO92	112,121
2SA1185	TOP3	117,128
2SA1254	M	114,123
2SA1309A	NS	114,121
2SA1310	NS	113,121
2SA1323	NS	113,123
2SA1375	U	116,126
2SA1495	I	117,129
2SA1498	N	116,129
2SA1499	TO220F	118,129
2SA1500	TO220F	117,129
2SA1501	TO220F	118,129
2SA1512	NS	113,121
2SA1531/A	S Mini 3P	111,121
2SA1532	S Mini 3P	111,123
2SA1533	TO92NL	113,121
2SA1534/A	TO92NL	113,121
2SA1535/A	TO220F	118,125
2SA1550	I	117,129
2SA1614	TO220F	118,129
2SA1619/A	TO92NL	113,121
2SA1674	MT2	114,121
2SA1737	Mini Power 3	111,122
2SA1738	Mini 3P	111,123
2SA1739	S Mini 3P	111,123
2SA1748	S Mini 3P	111,121
2SA1762	M	114,121
2SA1767	TO92	112,122
2SA1790	SS Mini 3P	111,123
2SA1791	SS Mini 3P	111,121
2SA1806	SS Mini 3P	111,123
2SA1816	NS	113,121
2SA1858	TO92NL	113,122
△ 2SA1868	U	116,129
2SA1890	Mini Power 3	112,121
2SA1949	U	116,125
2SA1950	U	116,125
2SA1951	U	116,125
2SA1961	MT2	114,122
2SA1982	MT2	114,121

Type No.	Package	Page
2SB621/A	TO92	112,121
2SB642	M	114,121
2SB643	M	114,121
2SB644	M	114,121
2SB709A	Mini 3P	111,121
2SB710/A	Mini 3P	111,121
2SB726	TO92	112
2SB745/A	M	114,121
2SB766/A	Mini Power 3	112,121
2SB767	Mini Power 3	112,121
2SB774	TO92	112,121
2SB779	Mini 3P	111,121
2SB788	M	114,121
2SB789/A	Mini Power 3	112,122
2SB790	M	114,121
2SB792/A	Mini 3P	111,121
2SB819	M	114,121
2SB873	TO92L	113,122
2SB928/A	N	116,126
2SB929/A	N	116,126
2SB930/A	N	116,126
2SB931	N	116,126
2SB932	N	116,126
2SB933	N	116,126
2SB934	N	116,126
2SB935/A	N	116,126
2SB936/A	N	116,126
2SB937/A ◎	N	116,127
2SB938/A ◎	N	116,127
2SB939/A ◎	N	116,127
2SB940/A	TO220F	118,126
2SB941/A	TO220F	118,125,126
2SB942/A	TO220F	118,126
2SB943	TO220F	118,126
2SB944	TO220F	118,126
2SB945	TO220F	118,126
2SB946	TO220F	119,126
2SB947/A	TO220F	119,126
2SB948/A	TO220F	119,126
2SB949/A ◎	TO220F	118,125,127
2SB950/A ◎	TO220F	118,127
2SB951/A ◎	TO220F	119,127
2SB952/A	N	116,126
2SB953/A	TO220F	119,126
2SB954/A	TO220F	118,126
2SB956	Mini Power 3	112,122
2SB967	U	116,125
2SB968	U	116,124
2SB970	Mini 3P	111,121
2SB976	TO92	112,122
2SB987	TO92L	113,122
2SB1011	TO126	115,125
2SB1030/A	NS	113,121
2SB1036	NS	113,121
2SB1050	M	114,122
2SB1052	TO220F	118,126
2SB1054	TOP3F	120,128
2SB1063	TO220F	118,126
2SB1070/A	N	116,126
2SB1071/A	TO220F	118,126
2SB1073	Mini Power 3	112,122
2SB1108 ◎	TO220F	119,127
2SB1148/A	I	117,126
2SB1154	TOP3F	120,128
2SB1155	TOP3F	120,128
2SB1156	TOP3F	120,128
2SB1169/A	I	117,126
2SB1170	I	117,126

[Discrete Devices Package Symbol]

SS Mini 3P: SS-Mini 3 Pins
S Mini 2P: S-Mini 2 Pins
S Mini 3P: S-Mini 3 Pins
S Mini 4P: S-Mini 4 Pins
S Mini 5P: S-Mini 5 Pins
S Mini 6P: S-Mini 6 Pins
Mini 2P: Mini 2 Pins
Mini 3P: Mini 3 Pins
Mini 4P: Mini 4 Pins
Mini 5P: Mini 5 Pins
Mini 6P: Mini 6 Pins
T Mini 3P: T Mini 3 Pins (Thin Type)
Mini Power 2P: Mini-Power 2 Pins
Mini Power 3P: Mini-Power 3 Pins
New Mini Power 2P: New Mini-Power 2 Pins
HNMP 2P: Half New Mini Power 2 Pins
Flat Mini 3P: Flat Mini 3 Pins
TO92: TO-92
TO92L: TO-92L
TO92NL: TO-92NL
TO92・2P: TO-92・2 Pins
S: S Type
NS: New S Type
U: U Type
M: M Type
MT1: MT1 Type
MT2: MT2 Type
MT3: MT3 Type
MT4: MT4 Type
N: N Type
I: I Type
TO126: TO-126
TO202: TO-202
TO220: TO-220
TO220F: TO-220 Full Pack
TO220D: TO-220D
TO220D 2P: TO-220D 2 Pins
TO220E: TO-220E
TOP3: TOP-3
TOP3E: TOP-3E
TOP3F: TOP-3 Full Pack
TOP3L: TOP-3L
SO10/14/16/28:
SO Package (10/14 Pins/16 Pins)
SIL8/SIL10/SIL12:
8-Pin SIP/10 Pins SIP/12-Pin SIP
DO34: DO-34
DO35: DO-35
DO41: DO-41
HSOP24D: HSOP-24D
SSOF10D: SSOF-10D
SSONF10D: SSONF-10D

△Tentative ◎Darlington

Type Number List

■ Discrete Devices

Type No.	Package	Page	Type No.	Package	Page	Type No.	Package	Page	Type No.	Package	Page
2SB1171/A	I	117,126	2SB1492 ◎	TOP3L	119,128	2SC1846	TO126	115,124	2SC3824/A	I	117,129
2SB1172/A	I	117,126	2SB1493 ◎	TOP3	119,128	2SC1847	TO126	115,124	2SC3825	I	117,129
2SB1173/A	I	117,126	2SB1498	I	117,129	2SC1905(H)	TO220	117,126	2SC3829	Mini 3P	111,123,124
2SB1174	I	117,126	2SB1500 ◎	TOP3L	119,128	2SC1953	TO126	115,125	2SC3850	TOP3	119,129
2SB1175	I	117,126	2SB1501 ◎	TOP3L	119,128	2SC1980	TO92	112,121	2SC3868	TO220F	118,130
2SB1176	I	117,126	2SB1502 ◎	TOP3L	119,128	2SC2188	M	114,122,123	2SC3869	TO220F	118,130
2SB1177	I	117,126	2SB1503 ◎	TOP3L	119,128	2SC2206	M	114,123	2SC3870	TO220F	119,130
2SB1178/A ◎	I	117,127	2SB1504 ◎	MT3	115,125	2SC2209	TO126	115,124	2SC3871	TO220F	119,130
2SB1179/A ◎	I	117,127	2SB1526	MT3	115,125	2SC2258	TO126	115,126	2SC3872	TOP3F	120,130
2SB1180/A ◎	I	117,127	2SB1528	TOP3L	119,128	2SC2295	Mini 3P	111,123	2SC3873	TOP3F	120,130
2SB1191/A	N	116,126	2SB1529	TOP3L	119,128	2SC2377	M	114,123	2SC3874	TOP3L	119,130
2SB1192/A	TO220F	118,126	2SB1531 ◎	TOP3L	119,128	2SC2404	Mini 3P	111,123	2SC3904	Mini 3P	111,123,124
2SB1193 ◎	TO220F	119,127	2SB1537	Mini Power 3	112,122	2SC2405	Mini 3P	111,121	2SC3910	TOP3L	119,129
2SB1194 ◎	TO220F	118,127	2SB1538	MT2	114,122	2SC2406	Mini 3P	111,121	2SC3929/A	S Mini 3P	111,121
2SB1195 ◎	TO220F	119,127	2SB1539	Mini Power 3	112,122	2SC2480	Mini 3P	111,123,124	2SC3930	S Mini 3P	111,123
2SB1207	NS	113,121	2SB1540	MT2	114,122	2SC2497/A	TO126	115,124	2SC3931	S Mini 3P	111,123
2SB1209	M	114,122	2SB1548/A	TO220D	118,126	2SC2590	TO126	115,125	2SC3932	S Mini 3P	111,123,124
2SB1218A	S Mini 3P	111,121	2SB1553	MT4	115,125	2SC2594	TO126	115,125	2SC3933	S Mini 3P	111,123,124
2SB1219/A	S Mini 3P	111,121	2SB1554	MT4	115	2SC2631	TO92	112,121	2SC3934	S Mini 3P	111,123,124
2SB1220	S Mini 3P	111,121	△2SB1573	U	116,125	2SC2632	TO92L	113,121	2SC3935	S Mini 3P	111,123,124
2SB1221	TO92NL	113,122	2SB1574	U	116,124	2SC2634	TO92	112,121	2SC3936	S Mini 3P	111,123
2SB1233/A	I	117,126	2SB1575	U	116,124	2SC2636	M	114,123,124	2SC3937	S Mini 3P	111,123,124
2SB1250 ◎	TO220F	118,128	△2SB1576 ◎	U	116,125	2SC2647	M	114,123	2SC3938	S Mini 3P	111,123
2SB1251 ◎	TO220F	118,128	△2SB1589	Mini Power 3	112,122	2SC2653(H)	TO202	117,126	2SC3939	TO92NL	113,121
2SB1252 ◎	TO220F	118,128	△2SB1592	TO92NL	113,122	2SC2671(F) ◇	TO92	112,123,124	2SC3940/A	TO92NL	113,121
2SB1253 ◎	TOP3F	120,128	△2SB1593	MT3	115,125	2SC2778	Mini 3P	111,123	2SC3941	TO92NL	113,122
2SB1254 ◎	TOP3F	120,128	2SB1597	NS	113,121	2SC2851	TO92L	113,123	2SC3942	TO220F	118,126
2SB1255 ◎	TOP3F	120,128	2SB1598	MT2	114,121	2SC2923	TO202	117,126	2SC3943	TO220F	118,125
2SB1288	TO92NL	113,122	2SB1599	Mini Power 3	112,121	2SC2924	U	116,126	2SC3944/A	TO220F	118,125
2SB1297	TO92NL	113,122	2SB1600	Mini Power 3	112,121	2SC2925	TO92	112,121	2SC3946	TO220F	118,126
2SB1299	TO220F	118,127	2SB1601	Mini Power 3	112,121	2SC2988	TO126	115,123	2SC3970/A	TO220F	118,130
2SB1317	TOP3L	119,128	△2SB1603	TO220E	118,126	2SC3063	TO126	115,126	2SC3971/A	TO220F	118,130
2SB1319	M	114,122	△2SB1604	TO220E	119,126	2SC3077	Mini 3P	111,123,124	2SC3972/A	TO220F	118,130
2SB1320A	MT1	114,121	△2SB1605	TO220E	118,126	2SC3130	Mini 3P	111,123,124	2SC3973/A	TO220F	119,130
2SB1321A	MT1	114,121	△2SB1606	TO220E	118,126	2SC3171	TOP3	119,129	2SC3974	TOP3F	120,130
2SB1322A	MT2	114,121	△2SB1607	TO220E	119,126	2SC3187	TO92	112,122	2SC3975	TOP3F	120,130
2SB1347	TOP3L	119,128	△2SB1612	Mini Power 3P	112	2SC3210	TOP3F	120,129	2SC3976	TOP3L	119,130
2SB1361	TOP3F	120,128	△2SB1613	MT2	114	2SC3211/A	TOP3F	120,129	2SC3977/A	TO220F	118,130
2SB1362	TOP3	119,128	△2SB1614	Mini Power 3P	112,122	2SC3212/A	TOP3F	120,129	2SC3978/A	TO220F	118,130
2SB1371	TOP3F	120,128	△2SB1618	S Mini 3P	111,121	2SC3311A	NS	113,121	2SC3979/A	TO220F	118,130
2SB1372	TOP3F	120,128	△2SB1619	S Mini 3P	111,122	2SC3312	NS	113,121	2SC3980/A	TOP3F	120,130
2SB1373	TOP3	119,128	2SB1623 ◎	TO220D	118,127	2SC3313	NS	113,123	2SC3981/A	TOP3F	120,130
2SB1377	MT2	114,121	△2SB1629	TO220E	118,127	2SC3314	NS	113,123	2SC3982/A	TOP3L	119,130
2SB1378	MT1	114,121	△2SB1630	MT3	115,126	2SC3315	NS	113,123	2SC4004	TO220F	118,129
2SB1393/A	TO220F	118,126	△2SB1631	MT4	115,126	2SC3352/A	TO220F	118,129	2SC4026	TO220F	118,130
2SB1398	MT2	114,122	2SB1632	U	116,129	2SC3353/A	TO220F	118,129	2SC4096	TOP3L	119,131
2SB1413	MT3	115,124	2SB1638	I	117,126	2SC3354	NS	113,123,124	2SC4111	TOP3L	119,131
2SB1414	MT3	115,125	2SB1643	N	116,127	2SC3403	N	116,129	2SC4152	TO220F	118,131
2SB1416	MT3	115,125	2SB1645	TOP3L	119,128	2SC3496/A	N	116,129	2SC4208/A	TO92NL	113,121
2SB1417/A	MT4	115,125	2SB1651	MT1	114,121	2SC3506	TOP3F	120,129	2SC4212	TO126	115
2SB1418/A ◎	MT4	115,125	2SB1653	MT3	115,125	2SC3507	TOP3F	120,129	2SC4358	TO220F	118
2SB1419	TOP3L	119,128	2SC829	TO92	112,123	2SC3526(H)	TO92L	113,122	2SC4359	TOP3F	120,129
2SB1421	TOP3	119,128	2SC1047	TO92	112,123	2SC3527	TOP3F	120,129	2SC4391	MT2	114,121
2SB1434	MT2	114,121	2SC1215	TO92	112,123,124	2SC3528	TOP3F	120,129	2SC4410	S Mini 3P	111,123
2SB1435	MT3	115,124	2SC1226/A	TO202	117,124	2SC3577	TOP3F	120,129	2SC4417	S Mini 3P	111,122
2SB1438	MT2	114,121	2SC1317	TO92	112,121	2SC3611	TO126	115,125	2SC4420	TOP3F	120,130
2SB1439	MT3	115,125	2SC1318/A	TO92	112,121	2SC3704	Mini 3P	111,123,124	2SC4502	MT2	114,122
2SB1440	Mini Power 3	112,121	2SC1359	TO92	112,123	2SC3707	Mini 3P	111,123	2SC4528 ◎	TOP3L	119,130
2SB1446	MT2	114,121	2SC1360/A	TO92L	113,122	2SC3738	TOP3L	119,131	2SC4533	TO220F	118,130
2SB1447	MT3	115,124	2SC1383	TO92L	113,121	2SC3743	TO220F	118,129	2SC4535 ◎	TOP3F	120,128
2SB1462	SS Mini 3P	111,121	2SC1384	TO92L	113,121	2SC3757	Mini 3P	111,123	2SC4543	Mini Power 3	112,121
2SB1463	SS Mini 3P	111,121	2SC1398/A	TO220	117,124,125	2SC3794/A	TO220F	118,129	2SC4545	MT3	115,124
2SB1464 ◎	TO220F	118,127	2SC1473/A	TO92	112,122	2SC3795/A	TO220F	118,129	2SC4559	TO220F	119,130
2SB1469 ◎	TOP3	119,128	2SC1509	TO92L	113,121	2SC3796/A	TOP3	119,129	2SC4562	S Mini 3P	111,121
2SB1470 ◎	TOP3L	119	2SC1518	TO92L	113,122	2SC3797/A	TOP3	119,129	2SC4576	TO220	117,131
2SB1473	MT2	114,122	2SC1567/A	TO126	115,125	2SC3798/A	TOP3F	120,129	2SC4606	M	114,121
2SB1488	MT2	114,122	2SC1568	TO126	115,125	2SC3799/A	TOP3F	120,129	2SC4621	TOP3F	120,130
2SB1490 ◎	TOP3L	119,128	2SC1573/A/B	TO92L	113,122	2SC3811	TO92	112,123	2SC4626	SS Mini 3P	111,123

△Tentative ◎Darlington ◇Center Emitter Transistor (1:B 2:E 3:C)

Discrete Devices

Type No.	Package	Page	Type No.	Package	Page	Type No.	Package	Page	Type No.	Package	Page
2SC4627	SS Mini 3P	111,123	2SC5283	TOP3E	120,129	2SD1272	TO220F	118,127	2SD1645 ◎	TO126	115,125
2SC4638	TO220F	118,130	△ 2SC5284	TOP3E	120,130	2SD1273/A	TO220F	118,126,127	2SD1663	TOP3F	120
2SC4655	SS Mini 3P	111,123	△ 2SC5285	U	116,125	2SD1274/A/B	TO220F	118,129	2SD1679	Mini 3P	111,122
2SC4656	SS Mini 3P	111,121	2SC5294	TOP3E	120,131	2SD1275/A ◎	TO220F	118,125,127	2SD1680	TOP3F	120,129
2SC4687	TOP3	119,130	2SC5295	SS Mini 3P	111,123	2SD1276/A ◎	TO220F	118,125,127	2SD1705	TOP3F	120,128
2SC4691	SS Mini 3P	111,123	△ 2SC5309	TOP3E	120,131	2SD1277/A ◎	TO220F	119,127	2SD1706	TOP3F	120,128
2SC4714	TO220	117,126	△ 2SC5335	MT2	114,121	2SD1280	Mini Power 3	112,122	2SD1707	TOP3F	120,128
2SC4715	NS	113,121	△ 2SC5340	MT3	115,126	2SD1295	U	116,124	2SD1719	N	116,127
2SC4716	NS	113,123,124	△ 2SC5341	MT3	115,125	2SD1302	TO92	112,121	2SD1727	TOP3	119,131
2SC4755	S Mini 3P	111,123	△ 2SC5346	MT2	114,121	2SD1315 ◎	TO220F	118,127	2SD1728	TOP3	119,131
2SC4767	TO92NL	113,123	△ 2SC5363	SS Mini 3P	111,123	2SD1316 ◎	N	116,127	2SD1729	TOP3	119,131
2SC4768	TOP3	119,130	2SC5378	S Mini 3P	123	2SD1317 ◎	N	116,127	2SD1731	TOP3	119,131
2SC4782	Mini 3P	111,123	2SC5379	SS Mini 3P	123	2SD1318 ◎	N	116,127	2SD1732	TOP3	119,131
2SC4787	MTI	114,122	2SC5380	TOP 3E	120,131	2SD1319 ◎	N	116,127	2SD1734	TO220F	118,131
2SC4805	S Mini 3P	111,123,124	2SC5381	TOP 3L	119,131	2SD1320 ◎	N	116,127	2SD1735	TOP3F	120,131
2SC4808	SS Mini 3P	111,123,124	2SC5389	TOP 3E	120,131	2SD1321 ◎	N	116,127	2SD1736	TOP3F	120,131
2SC4809	SS Mini 3P	111,123,124	2SD592/A	TO92	112,121	2SD1322 ◎	TO220F	118,127	2SD1737	TOP3F	120,131
2SC4835	S Mini 3P	111,123,124	2SD601A	Mini 3P	111,121	2SD1323 ◎	TO220F	118,127	2SD1738	TOP3F	120,131
2SC4892	MT4	115,129	2SD602/A	Mini 3P	111,121	2SD1324 ◎	TO220F	119,127	2SD1739	TOP3F	120,131
2SC4893	MT3	123	2SD637	M	114,121	2SD1325 ◎	TO220F	118,127	2SD1741/A	I	117,126
2SC4898	TO220D	118,130	2SD638	M	114,121	2SD1326 ◎	TO220F	118,127	2SD1742/A	I	117,126
2SC4953	TO220D	118,130	2SD639	M	114,121	2SD1327 ◎	TO220F	119,127	2SD1743/A	I	117,126
2SC4960	TOP3F	120,129	2SD661/A	M	114,121	2SD1328	Mini 3P	111,121	2SD1744	I	117,126
2SC4961	TO220E	118,130	2SD662/A/B	M	114,122	2SD1330	M	114,121	2SD1745	I	117,126
2SC4968	TO92	112,123	2SD814/A	Mini 3P	111,121	2SD1336/A ◎	TO220F	119,127	2SD1746	I	117,126
△ 2SC4985	MT3	115,129	2SD874/A	Mini Power 3	112,121	2SD1350/A	M	114,122	2SD1747/A	I	117,126
△ 2SC4986	MT3	115,129	2SD875	Mini Power 3	112,121	2SD1385	M	114,122	2SD1748/A ◎	I	117,127
△ 2SC5018	MT2	114,122	2SD946/A/B ◎	TO126	115,125	2SD1391	TOP3	119,131	2SD1749/A ◎	I	117,127
2SC5019	Mini Power 3	112,123,124	2SD958	M	114,121	2SD1423/A	NS	113,121	2SD1750/A ◎	I	117,127
△ 2SC5020	S Mini 3P	111,123	2SD965	TO92	112,122	2SD1424	NS	113,121	2SD1751	I	117,126
△ 2SC5021	SS Mini 3P	111,123	2SD966	TO92L	113,122	2SD1439	TOP3	119,131	2SD1752/A	I	117,126
2SC5026	Mini Power 3	112,121	2SD968/A	Mini Power 3	112,122	2SD1441	TOP3	119,131	2SD1753	I	117,127
2SC5032	TO220E	118,130	2SD973/A	M	114,121	2SD1444/A	TO220F	119,126	2SD1754/A	I	117,127
2SC5034	TO220E	119,130	2SD1010	TO92	112,121	2SD1445/A	TO220F	119,126	2SD1755	I	117,127
△ 2SC5035	TO220E	118,130	2SD1011	TO92	112,121	2SD1446 ◎	TO220F	119,127	2SD1771/A	N	116,126
△ 2SC5036	TO220E	118,130	2SD1030	Mini 3P	111,121	2SD1450	NS	113,121	2SD1772/A	TO220F	118,126
△ 2SC5037	TO220E	118,130	2SD1051	M	114,121	2SD1457/A ◎	TOP3F	120,128	2SD1773 ◎	TO220F	119,127
2SC5063	N	116,130	2SD1112	U	116,126	2SD1458	M	114,121	2SD1775/A	N	116,127
2SC5077	TO220E	119,130	2SD1119	Mini Power 3	112,122	2SD1474	TO220F	119,127	2SD1776/A	TO220F	118,127
2SC5104	N	116,130	2SD1149	Mini 3P	111,121	2SD1475	TO220F	118,126	2SD1808A ◎	NS	113
2SC5121	TO126(a)	115,126	2SD1198/A ◎	M	114,121	2SD1478/A ◎	Mini 3P	111,121	2SD1819A	S Mini 3P	111,121
2SC5127	TO220E	130	2SD1199	M	114,121	2SD1479	TOP3	119,131	2SD1820/A	S Mini 3P	111,121
2SC5128	TO220E	130	2SD1205/A ◎	M	114,121	2SD1480	TO220F	118,126	2SD1821/A	S Mini 3P	111,121
2SC5145	N	116,129	2SD1211	TO92L	113,122	2SD1485	TOP3F	120,128	2SD1823	S Mini 3P	111,121
2SC5156	TOP3E	120,129	2SD1244	M	114,122	2SD1499	TO220F	118,126	2SD1824	S Mini 3P	111,121
2SC5157	TOP3E	120,129	2SD1249/A	N	116,126	2SD1510 ◎	TO220F	118,127	2SD1831	TOP3F	120,128
2SC5158	TOP3E	120,130	2SD1250/A	N	116,126	2SD1511 ◎	Mini Power 3	112,121	2SD1844	TOP3F	120,131
2SC5159	TOP3E	120,130	2SD1251/A	N	116,126	2SD1512	NS	113,121	2SD1845	TOP3F	120,131
2SC5160	TOP3E	120,130	2SD1252/A	N	116,126	2SD1517	TO220F	118,126	2SD1846	TOP3F	120,131
2SC5163	TOP3E	120,131	2SD1253/A	N	116,126	2SD1528	TO220	117,126	2SD1847	TOP3F	120,131
2SC5164	TOP3E	120,131	2SD1254	N	116,126	2SD1529	N	116,126	2SD1848	TOP3F	120,131
2SC5165	TOP3E	120,131	2SD1255	N	116,126	2SD1530	TO220F	118,126	2SD1849	TOP3F	120,131
△ 2SC5166	TOP3E	120,131	2SD1256	N	116,126	2SD1534 ◎	N	116,127	2SD1850	TOP3F	120,131
△ 2SC5167	TOP3E	120,131	2SD1257/A	N	116,126	2SD1535 ◎	TO220F	119,127	2SD1890 ◎	TO220F	118,128
2SC5190	S Mini 3P	111,123,124	2SD1258	N	116,127	2SD1538/A	N	116,126	2SD1891 ◎	TO220F	118,128
△ 2SC5216	Mini 3P	111,123,124	2SD1259/A	N	116,127	2SD1539/A	TO220F	118,126	2SD1892 ◎	TO220F	118,128
△ 2SC5217	TO220E	119,130	2SD1260/A ◎	N	116,127	2SD1541	TOP3F	120,131	2SD1893 ◎	TOP3F	120,128
2SC5221	U	116,125	2SD1261/A ◎	N	116,127	2SD1575	TO220F	118,131	2SD1894 ◎	TOP3F	120,128
2SC5222	U	116,125	2SD1262/A ◎	N	116,127	2SD1576	TOP3F	120,131	2SD1895 ◎	TOP3F	120,128
2SC5223	U	116,125	2SD1263/A	TO220F	118,126	2SD1577	TOP3F	120,131	2SD1934	TO92NL	113,122
2SC5224	U	116,125	2SD1264/A	TO220F	118,126	2SD1608 ◎	TO220F	119,127	2SD1937	TO92NL	113,122
△ 2SC5235	TOP3L	119,131	2SD1265/A	TO220F	118,126	2SD1611	N	116,127	2SD1964	TO220F	119,126
2SC5243	TOP3L	119,131	2SD1266/A	TO220F	118,125,126	2SD1632	TOP3F	120,131	2SD1975	TOP3L	119,128
2SC5244	TOP3L	119,131	2SD1267/A	TO220F	118,126	2SD1633 ◎	TO220F	118,127	2SD1979	S Mini 3P	111,121
2SC5270	TOP3E	120,131	2SD1268	TO220F	118,126	2SD1634 ◎	TO220F	119,127	2SD1985/A	TO220F	118,126
2SC5278	TOP3	119,129	2SD1269	TO220F	118,126	2SD1640 ◎	TO126	115,125	2SD1990	TO220	117,126
2SC5281	TOP3E	120,130	2SD1270	TO220F	118,126	2SD1641	TOP3	119,129	2SD1991A	MT1	114,121
2SC5282	TOP3E	120,130	2SD1271/A	TO220F	119,126	2SD1643/A	TOP3F	129,128	2SD1992A	MT1	114,121

△Tentative ◎Darlington

Type Number List

■ Discrete Devices

Type No.	Package	Page
2SD1993	MT1	114,121
2SD1994A	MT2	114,121
2SD1995	MT1	114,121
2SD1996	MT1	114,121
2SD2000	TO220F	118,126
2SD2001	TO220F	117
2SD2018 ◎	TO126	115,125
2SD2029	TOP3L	119,128
2SD2051 ◎	TO220F	118,125
2SD2052	TOP3F	120,128
2SD2053	TOP3	119,128
2SD2057	TOP3F	120,131
2SD2064	TOP3F	120,128
2SD2065	TOP3F	120,128
2SD2066	TOP3	119,128
2SD2067 ◎	MT2	114,121
2SD2071	MT2	114,121
2SD2074	MT2	114,121
2SD2133	MT3	115,124
2SD2134	MT3	115,125
2SD2136	MT3	115,125
2SD2137/A	MT4	115,125
2SD2138/A ◎	MT4	115,125
2SD2139	MT4	115,126
2SD2140	TOP3	119,128
2SD2151	TO220F	119
2SD2156	TO220F	118,127
2SD2157/A ◎	TO220F	118,126,127
2SD2158	TO220F	118,127
2SD2177/A	MT2	114,121
2SD2178	MT3	115,124
2SD2179	MT2	114,121
△ 2SD2180	MT3	115,124
2SD2183	MT3	115,125
2SD2184	MT2	114,121
2SD2185	Mini Power 3	112,121
2SD2209 ◎	I	117,127
2SD2210	Mini Power 3	112,121
2SD2214 ◎	TO220F	127
2SD2215/A	I	117,126
2SD2216	SS Mini 3P	111,121
2SD2220 ◎	MT3	115,125
2SD2221 ◎	TOP3	119,128
2SD2222 ◎	TOP3L	119
2SD2225	MT2	114,122
2SD2240/A	SS Mini 3P	111,121
2SD2242/A ◎	MT4	115,125
2SD2249	MT2	114,122
2SD2250 ◎	TOP3L	119,128
2SD2254 ◎	TOP3L	119,128
2SD2255 ◎	TOP3	119,128
2SD2258	MT2	114,121
2SD2259	MT2	114,121
2SD2266	MT4	115
2SD2273 ◎	TOP3L	119,128
2SD2274 ◎	TOP3L	119,128
2SD2275 ◎	TOP3L	119,128
2SD2276 ◎	TOP3L	119,128
2SD2310	TO220F	118,131
2SD2321	NS	113,122
2SD2327	TOP3L	119,128
2SD2328	TOP3L	119,128
2SD2329	TOP3F	120,131
2SD2330	TOP3F	120,131
2SD2340 ◎	TOP3	119,128
2SD2341	MT3	115,125
2SD2345	SS Mini 3P	111,121
2SD2354	TOP3F	120,131

Type No.	Package	Page
2SD2355	TOP3F	120,131
2SD2357	Mini Power 3	112,122
2SD2358	MT2	114,122
2SD2359	Mini Power 3	112,122
2SD2360	MT2	114,122
2SD2374/A	TO220D	118,126
2SD2375/A	TO220D	118,127
2SD2407	U	116,125
2SD2408	U	116,124
2SD2409	U	116,124
△ 2SD2410 ◎	U	116,125
△ 2SD2411 ◎	U	116,125
△ 2SD2412	U	116,125
2SD2413	Mini Power 3P	112,122
2SD2416	Mini Power 3P	112
2SD2420 ◎	TO220D	118,127
△ 2SD2441	Mini Power 3	112,122
△ 2SD2443	U	116,126
△ 2SD2453	U	116,126
2SD2455	NS	113,121
2SD2456	MT2	114,121
2SD2457	Mini Power 3	112,121
2SD2458	Mini Power 3	112,121
2SD2459	Mini Power 3	112,121
2SD2460	NS	113,121
2SD2464	TO92	112,122
2SD2465	TO220E	118,126
2SD2466	TO220E	119,126
2SD2467	TO220E	118,126
2SD2468	TO220E	118,126
2SD2469	TO220E	119,126
2SD2479 ◎	MT3	115,125
△ 2SD2482	S Mini 3	111,121
△ 2SD2483	S Mini 3	111,122
△ 2SD2486	TO220F	118,126
2SD2504	TO92	112,122
2SD2510	TOP3E	120,131
2SD2511	TOP3E	120,131
2SD2512	TOP3E	120,131
2SD2513	TOP3E	120,131
2SD2514	TOP3E	120,131
2SD2515	TOP3E	120,131
2SD2521	TOP3E	120,131
2SD2523	TOP3E	120,131
△ 2SD2527	TO220D	118,127
△ 2SD2528	TO220D	118,127
2SD2530 ◎	MT4	115,125
△ 2SD2538 ◎	TO220D	118,127
2SD2544	MT4	115,126
△ 2SD2549	TO220D	118,126
2SD2554	TOP 3L	119,128
2SD2556	U	116,125
2SD2565	MT2	114,122
2SD2573	MT3	115,126
△ 2SD2575	TO92	112,122

Small Signal Transistor Arrays

Type No.	Package	Page
UN206	SO10C	138
UN216	SO14	138
UN217	SO10C	138
UN223	SO14	138
UN225	SO16	138
UN227	SO16	138
UN228	SO10C	138
UN230	SO10C	138
△ UNA0231	SO14	138
△ UNA0232	SO10C	138

Type No.	Package	Page
△ UNA0233	SO14	142

Transistors with built-in resistor

Type No.	Package	Page
● UN1000 Series		
UN1110	M	140
UN1111	M	140
UN1112	M	140
UN1113	M	140
UN1114	M	140
UN1115	M	140
UN1116	M	140
UN1117	M	140
UN1118	M	140
UN1119	M	140
UN111D	M	140
UN111E	M	140
UN111F	M	140
UN111H	M	140
UN111L	M	140
UN1121	M	140
UN1122	M	140
UN1123	M	140
UN1124	M	140
UN112X	M	140
UN112Y	M	140
UN1210	M	140
UN1211	M	140
UN1212	M	140
UN1213	M	140
UN1214	M	140
UN1215	M	140
UN1216	M	140
UN1217	M	140
UN1218	M	140
UN1219	M	140
UN121D	M	140
UN121E	M	140
UN121F	M	140
UN121K	M	140
UN121L	M	140
UN1221	M	140
UN1222	M	140
UN1223	M	140
UN1224	M	140
UN1231	M	140
UN1231A	M	140
● UN2000 Series		
UN2110	Mini 3P	140
UN2111	Mini 3P	140
UN2112	Mini 3P	140
UN2113	Mini 3P	140
UN2114	Mini 3P	140
UN2115	Mini 3P	140
UN2116	Mini 3P	140
UN2117	Mini 3P	140
UN2118	Mini 3P	140
UN2119	Mini 3P	140
UN211D	Mini 3P	140
UN211E	Mini 3P	140
UN211F	Mini 3P	140
UN211H	Mini 3P	140
UN211L	Mini 3P	140
UN211M	Mini 3P	140
UN211N	Mini 3P	140
UN211T	Mini 3P	140
UN211V	Mini 3P	140

Type No.	Package	Page
UN211Z	Mini 3P	140
UN2121	Mini 3P	140
UN2122	Mini 3P	140
UN2123	Mini 3P	140
UN2124	Mini 3P	140
UN212X	Mini 3P	140
UN212Y	Mini 3P	140
UN2154	Mini 3P	140
UN2210	Mini 3P	140
UN2211	Mini 3P	140
UN2212	Mini 3P	140
UN2213	Mini 3P	140
UN2214	Mini 3P	140
UN2215	Mini 3P	140
UN2216	Mini 3P	140
UN2217	Mini 3P	140
UN2218	Mini 3P	140
UN2219	Mini 3P	140
UN221D	Mini 3P	140
UN221E	Mini 3P	140
UN221F	Mini 3P	140
UN221K	Mini 3P	140
UN221L	Mini 3P	140
UN221M	Mini 3P	140
UN221N	Mini 3P	140
UN221T	Mini 3P	140
UN221V	Mini 3P	140
UN221Z	Mini 3P	140
UN2221	Mini 3P	140
UN2222	Mini 3P	140
UN2223	Mini 3P	140
UN2224	Mini 3P	140
● UN4000 Series		
UN4110	NS	140
UN4111	NS	140
UN4112	NS	140
UN4113	NS	140
UN4114	NS	140
UN4115	NS	140
UN4116	NS	140
UN4117	NS	140
UN4118	NS	140
UN4119	NS	140
UN411D	NS	140
UN411E	NS	140
UN411F	NS	140
UN411H	NS	140
UN411L	NS	140
UN4121	NS	140
UN4122	NS	140
UN4123	NS	140
UN4124	NS	140
UN412X	NS	140
UN412Y	NS	140
UN4210	NS	140
UN4211	NS	140
UN4212	NS	140
UN4213	NS	140
UN4214	NS	140
UN4215	NS	140
UN4216	NS	140
UN4217	NS	140
UN4218	NS	140
UN4219	NS	140
UN421D	NS	140
UN421E	NS	140
UN421F	NS	140

△Tentative ◎Darlington

Discrete Devices

Type No.	Package	Page
UN421K	NS	140
UN421L	NS	140
UN4221	NS	140
UN4222	NS	140
UN4223	NS	140
UN4224	NS	140
● UN5000 Series		
UN5110	S Mini 3P	140
UN5111	S Mini 3P	140
UN5112	S Mini 3P	140
UN5113	S Mini 3P	140
UN5114	S Mini 3P	140
UN5115	S Mini 3P	140
UN5116	S Mini 3P	140
UN5117	S Mini 3P	140
UN5118	S Mini 3P	140
UN5119	S Mini 3P	140
UN511D	S Mini 3P	140
UN511E	S Mini 3P	140
UN511F	S Mini 3P	140
UN511H	S Mini 3P	140
UN511L	S Mini 3P	140
UN511M	S Mini 3P	140
UN511N	S Mini 3P	140
UN511T	S Mini 3P	140
UN511V	S Mini 3P	140
UN511Z	S Mini 3P	140
UN5154	S Mini 3P	140
UN5210	S Mini 3P	140
UN5211	S Mini 3P	140
UN5212	S Mini 3P	140
UN5213	S Mini 3P	140
UN5214	S Mini 3P	140
UN5215	S Mini 3P	140
UN5216	S Mini 3P	140
UN5217	S Mini 3P	140
UN5218	S Mini 3P	140
UN5219	S Mini 3P	140
UN521D	S Mini 3P	140
UN521E	S Mini 3P	140
UN521F	S Mini 3P	140
UN521K	S Mini 3P	140
UN521L	S Mini 3P	140
UN521M	S Mini 3P	140
UN521N	S Mini 3P	140
UN521T	S Mini 3P	140
UN521V	S Mini 3P	140
UN521Z	S Mini 3P	140
UNR5225	S Mini 3P	140
UNR5226	S Mini 3P	140
UNR5227	S Mini 3P	140
● UN6000 Series		
UN6110	MT1	140
UN6111	MT1	140
UN6112	MT1	140
UN6113	MT1	140
UN6114	MT1	140
UN6115	MT1	140
UN6116	MT1	140
UN6117	MT1	140
UN6118	MT1	140
UN6119	MT1	140
UN611D	MT1	140
UN611E	MT1	140
UN611F	MT1	140
UN611H	MT1	140

Type No.	Package	Page
UN611L	MT1	140
UN6121	MT1	140
UN6122	MT1	140
UN6123	MT1	140
UN6124	MT1	140
UN612X	MT1	140
UN612Y	MT1	140
UN6210	MT1	140
UN6211	MT1	140
UN6212	MT1	140
UN6213	MT1	140
UN6214	MT1	140
UN6215	MT1	140
UN6216	MT1	140
UN6217	MT1	140
UN6218	MT1	140
UN6219	MT1	140
UN621D	MT1	140
UN621E	MT1	140
UN621F	MT1	140
UN621K	MT1	140
UN621L	MT1	140
UN6221	MT1	140
UN6222	MT1	140
UN6223	MT1	140
UN6224	MT1	140
● UN7000 Series		
UN7231	Mini Power 3	140
● UN8000 Series		
UN8231/A	MT2	140
● UN9000 Series		
UN9110	SS Mini 3P	140
UN9111	SS Mini 3P	140
UN9112	SS Mini 3P	140
UN9113	SS Mini 3P	140
UN9114	SS Mini 3P	140
UN9115	SS Mini 3P	140
UN9116	SS Mini 3P	140
UN9117	SS Mini 3P	140
UN9118	SS Mini 3P	140
UN9119	SS Mini 3P	140
UN911D	SS Mini 3P	140
UN911E	SS Mini 3P	140
UN911F	SS Mini 3P	140
UN911H	SS Mini 3P	140
UN911L	SS Mini 3P	140
UN9210	SS Mini 3P	140
UN9211	SS Mini 3P	140
UN9212	SS Mini 3P	140
UN9213	SS Mini 3P	140
UN9214	SS Mini 3P	140
UN9215	SS Mini 3P	140
UN9216	SS Mini 3P	140
UN9217	SS Mini 3P	140
UN9218	SS Mini 3P	140
UN9219	SS Mini 3P	140
UN921D	SS Mini 3P	140
UN921E	SS Mini 3P	140
UN921F	SS Mini 3P	140
UN921K	SS Mini 3P	140
UN921L	SS Mini 3P	140
UNR921M	SS Mini 3P	140
UNR921N	SS Mini 3P	140
△ UNR911AJ	SS Mini 3P	140
△ UNR911BJ	SS Mini 3P	140

Type No.	Package	Page
△ UNR911CJ	SS Mini 3P	140
△ UNR921AJ	SS Mini 3P	140
△ UNR921BJ	SS Mini 3P	140
△ UNR921CJ	SS Mini 3P	140

Power Transistor Arrays

Type No.	Package	Page
● PU1000 Series		
PU1101	SIL12	133
PU1501	SIL12	133
PU1601	SIL12	133
PU1619	SIL12	133
PU1620	SIL12	133
● PU3000 Series		
PU3110	SIL8	132
PU3111	SIL8	132
PU3112	SIL8	132
PU3113	SIL8	132
PU3114	SIL8	132
PU3116	SIL8	132
PU3117	SIL8	132
PU3118	SIL8	132
PU3119	SIL8	132
PU3120	SIL8	132
PU3121	SIL8	132
PU3122	SIL8	132
PU3123	SIL8	132
PU3124	SIL8	132
PU3127	SIL8	132
△ PU3131	SIL8	132
△ PU3132	SIL8	132
△ PU3133	SIL8	132
△ PU3134	SIL8	132
△ PU3135	SIL8	132
PU3136	SIL8	132
PU3137	SIL8	132
△ PU3138	SIL8	132
PU3141	SIL8	132
△ PU3142	SIL8	132
△ PU3143	SIL8	132
△ PU3144	SIL8	132
PU3145	SIL8	132
PU3146	SIL8	132
△ PU3147	SIL8	132
△ PU3148	SIL8	132
△ PU3151	SIL8	132
△ PU3152	SIL8	132
△ PU3153	SIL8	132
△ PU3154	SIL8	132
△ PU3161	SIL8	132
△ PU3162	SIL8	132
△ PU3163	SIL8	132
△ PU3164	SIL8	132
PU3171	SIL8	132
PU3173	SIL8	132
PU3210	SIL8	132
PU3211	SIL8	132
PU3212	SIL8	132
PU3213	SIL8	132
PU3214	SIL8	132
PU3215	SIL8	132
PU3216	SIL8	132
PU3219	SIL8	132
PU3220	SIL8	132
PU3226	SIL8	132
PU3273	SIL8	132
PUA3228	SIL8	132

Type No.	Package	Page
● PU4000 Series		
PU4110	SIL10	132
PU4111	SIL10	132
PU4112	SIL10	132
PU4113	SIL10	132
PU4114	SIL10	132
PU4116	SIL10	132
PU4117	SIL10	132
PU4118	SIL10	132
PU4119	SIL10	132
PU4120	SIL10	132
PU4121	SIL10	132
PU4122	SIL10	132
PU4123	SIL10	132
PU4124	SIL10	132
PU4126	SIL10	132
PU4127	SIL10	132
PU4128	SIL10	132
△ PU4131	SIL10	132
△ PU4132	SIL10	132
△ PU4133	SIL10	132
△ PU4134	SIL10	132
PU4136	SIL10	132
PU4137	SIL10	132
△ PU4138	SIL10	132
PU4141	SIL10	132
△ PU4142	SIL10	132
△ PU4143	SIL10	132
△ PU4144	SIL10	132
△ PU4147	SIL10	132
△ PU4148	SIL10	132
△ PU4151	SIL10	132
△ PU4152	SIL10	132
△ PU4153	SIL10	132
△ PU4154	SIL10	132
△ PU4161	SIL10	132
△ PU4162	SIL10	132
△ PU4163	SIL10	132
△ PU4164	SIL10	132
PU4171	SIL10	132
PU4173	SIL10	132
PU4210	SIL10	132
PU4211	SIL10	132
PU4212	SIL10	132
PU4213	SIL10	132
PU4214	SIL10	132
PU4215	SIL10	132
PU4216	SIL10	132
PU4219	SIL10	132
PU4220	SIL10	132
PU4273	SIL10	132
PU4310	SIL10	132
PU4311	SIL10	132
PU4312	SIL10	132
PU4313	SIL10	132
PU4314	SIL10	132
PU4316	SIL10	132
PU4319	SIL10	132
PU4320	SIL10	132
PU4325	SIL10	132
PU4410	SIL10	132
PU4411	SIL10	132
PU4412	SIL10	132
PU4413	SIL10	132
PU4414	SIL10	132
PU4416	SIL10	132
PU4417	SIL10	132
PU4418	SIL10	132

△Tentative ◎Darlington

Type Number List

■ Discrete Devices

Type No.	Package	Page
PU4419	SIL10	132
PU4420	SIL10	132
PU4421	SIL10	132
PU4422	SIL10	132
PU4423	SIL10	132
PU4424	SIL10	132
△ PU4431	SIL10	132
△ PU4432	SIL10	132
△ PU4433	SIL10	132
△ PU4434	SIL10	132
PU4435	SIL10	132
PU4436	SIL10	132
PU4437	SIL10	132
△ PU4438	SIL10	132
PU4441	SIL10	132
△ PU4442	SIL10	132
△ PU4443	SIL10	132
△ PU4444	SIL10	132
PU4445	SIL10	132
PU4446	SIL10	132
△ PU4447	SIL10	132
△ PU4448	SIL10	132
△ PU4451	SIL10	132
△ PU4452	SIL10	132
△ PU4453	SIL10	132
△ PU4454	SIL10	132
△ PU4461	SIL10	132
△ PU4462	SIL10	132
△ PU4463	SIL10	132
△ PU4464	SIL10	132
PU4471	SIL10	132
PU4473	SIL10	132
PU4510	SIL10	132
PU4511	SIL10	132
PU4512	SIL10	132
PU4513	SIL10	132
PU4514	SIL10	132
PU4515	SIL10	132
PU4516	SIL10	132
PU4519	SIL10	132
PU4520	SIL10	132
PU4573	SIL10	132
PUB4701	SIL10	133
PUB4702	SIL10	133
PUC4701	SIL12	133
● PU6000 Series		
PU61C56	SIL8	132
● PU7000 Series		
PU7456	SIL10	133

5- and 6-Pin Transistors
5- and 6-Pin Transistors with built-in resistor
5- and 6-Pin Field Effect Transistors

Type No.	Package	Page
● XN1000 Series		
XN1101	Mini 5P	136
XN1110	Mini 5P	136
XN1111	Mini 5P	136
XN1112	Mini 5P	136
XN1113	Mini 5P	136
XN1114	Mini 5P	136
XN1115	Mini 5P	136
XN1116	Mini 5P	136
XN1117	Mini 5P	136
XN1118	Mini 5P	136
XN1119	Mini 5P	136
XN111F	Mini 5P	136
XN111H	Mini 5P	136
XN111M	Mini 5P	136
XN1201	Mini 5P	136
XN1210	Mini 5P	136
XN1211	Mini 5P	136
XN1212	Mini 5P	136
XN1213	Mini 5P	136
XN1214	Mini 5P	136
XN1215	Mini 5P	136
XN1216	Mini 5P	136
XN1217	Mini 5P	136
XN121E	Mini 5P	136
XN121F	Mini 5P	136
XN121M	Mini 5P	136
XN1401	Mini 5P	134
XN1501	Mini 5P	134
XN1504	Mini 5P	134
XN1507	Mini 5P	134
XN1509	Mini 5P	134
XN1531	Mini 5P	134
XN1601	Mini 5P	134
XN1871	Mini 5P	138
XN1872	Mini 5P	138
XN1A312	Mini 5P	136
XN1B301	Mini 5P	134
XN1C301	Mini 5P	134
XN1D873	Mini 5P	138
XN1D874	Mini 5P	138
● XN2000 Series		
XN2210	Mini 5P	136
XN2211	Mini 5P	136
XN2212	Mini 5P	136
XN2215	Mini 5P	136
XN2216	Mini 5P	136
XN2401	Mini 5P	134
XN2501	Mini 5P	134
XN2531	Mini 5P	134
● XN4000 Series		
XN4111	Mini 6P	136
XN4112	Mini 6P	136
XN4113	Mini 6P	136
XN4114	Mini 6P	136
XN4115	Mini 6P	136
XN4116	Mini 6P	136
XN4130	Mini 6P	136
XN4210	Mini 6P	136
XN4211	Mini 6P	136
XN4212	Mini 6P	136
XN4213	Mini 6P	136
XN4214	Mini 6P	136
XN4215	Mini 6P	136
XN4216	Mini 6P	136
XN421N	Mini 6P	136
XN421F	Mini 6P	136
XN4311	Mini 6P	136
XN4312	Mini 6P	136
XN4314	Mini 6P	136
XN4315	Mini 6P	136
XN4316	Mini 6P	136
XN431L	Mini 6P	136
XN4322	Mini 6P	136
XN4381	Mini 6P	136
XN04382	Mini 6P	136
XN4401	Mini 6P	134
XN4402	Mini 6P	134
XN4404	Mini 6P	134
XN4482	Mini 6P	134
XN4501	Mini 6P	134
XN4502	Mini 6P	134
XN4503	Mini 6P	134
XN4504	Mini 6P	134
XN4505	Mini 6P	134
XN4506	Mini 6P	134
XN4509	Mini 6P	134
XN4556	Mini 6P	134
XN4601	Mini 6P	134
XN4604	Mini 6P	134
XN4608	Mini 6P	134
XN4609	Mini 6P	134
XN4683	Mini 6P	134
● XN5000 Series		
XN5501	Mini 6P	134
XN5531	Mini 6P	134
XN5553	Mini 6P	134
XN5601	Mini 6P	134
● XN6000 Series		
XN6111	Mini 6P	136
XN6112	Mini 6P	136
XN6113	Mini 6P	136
XN6114	Mini 6P	136
XN6115	Mini 6P	136
XN6116	Mini 6P	136
XN611FH	Mini 6P	136
XN6211	Mini 6P	136
XN6212	Mini 6P	136
XN6213	Mini 6P	136
XN6214	Mini 6P	136
XN6215	Mini 6P	136
XN6216	Mini 6P	136
XN6401	Mini 6P	134
XN6435	Mini 6P	134
XN6501	Mini 6P	135
XN6534	Mini 6P	135
XN6537	Mini 6P	135
XN6542	Mini 6P	135
XN6543	Mini 6P	135
XN6A554	Mini 6P	135
XN06506	Mini 6P	135
△ XN06776	Mini 6P	138
△ XN06877	Mini 6P	138
● XN7000 Series		
XN7651	Mini 6P	135,138
● XN8000 Series		
XN8081	Mini 6P	138
● XP1000 Series		
XP1101	S Mini 5P	136
XP1110	S Mini 5P	136
XP1111	S Mini 5P	136
XP1112	S Mini 5P	136
XP1113	S Mini 5P	136
XP1114	S Mini 5P	136
XP1115	S Mini 5P	136
XP1116	S Mini 5P	136
XP1117	S Mini 5P	136
XP1118	S Mini 5P	136
XP1119	S Mini 5P	136
XP111F	S Mini 5P	136
XP111H	S Mini 5P	136
XP0111M	S Mini 5P	136
XP1201	S Mini 5P	136
XP1210	S Mini 5P	136
XP1211	S Mini 5P	136
XP1212	S Mini 5P	136
XP1213	S Mini 5P	136
XP1214	S Mini 5P	136
XP1215	S Mini 5P	136
XP1216	S Mini 5P	136
XP1217	S Mini 5P	136
XP0121E	S Mini 5P	136
XP0121N	S Mini 5P	136
XP1401	S Mini 5P	132
XP1501	S Mini 5P	132
XP1504	S Mini 5P	134
XP1507	S Mini 5P	134
XP1554	S Mini 5P	134
XP1601	S Mini 5P	134
XP1B301	S Mini 5P	134
XP1C301	S Mini 5P	134
XP1D873	S Mini 5P	138
XP1D874	S Mini 5P	138
XP1E554	S Mini 5P	134
XP01531	S Mini 5P	134
XP0D875	S Mini 5P	138
● XP2000 Series		
XP2210	S Mini 5P	136
XP2211	S Mini 5P	136
XP2215	S Mini 5P	136
XP2401	S Mini 5P	134
XP2501	S Mini 5P	134
● XP3000 Series		
XP03311	Mini 5P	136
XP03312	Mini 5P	136
XP03383	Mini 5P	136
● XP4000 Series		
XP4111	S Mini 6P	136
XP4112	S Mini 6P	136
XP4113	S Mini 6P	136
XP4114	S Mini 6P	136
XP4115	S Mini 6P	136
XP4116	S Mini 6P	136
XP4210	S Mini 6P	136
XP4211	S Mini 6P	136
XP4212	S Mini 6P	136
XP4213	S Mini 6P	136
XP4214	S Mini 6P	136
XP4215	S Mini 6P	136
XP4216	S Mini 6P	136
XP04286	S Mini 6P	136
XP4311	S Mini 6P	136
XP4312	S Mini 6P	136
XP04313	S Mini 6P	136
XP4314	S Mini 6P	136
XP4315	S Mini 6P	136
XP4316	S Mini 6P	136
XP4401	S Mini 6P	134
XP4501	S Mini 6P	134
XP4506	S Mini 6P	134
XP4601	S Mini 6P	134
XP4654	S Mini 6P	134
XP4683	S Mini 6P	134
XP0431N	S Mini 6P	136

△Tentative

Discrete Devices

Type No.	Package	Page
● XP5000 Series		
XP5501	S Mini 6P	134
XP5553	S Mini 6P	134
XP5555	S Mini 6P	134
XP5601	S Mini 6P	134
XP05531	S Mini 6P	134
XP05543	S Mini 6P	134
XP05554	S Mini 6P	134
XP5A554	S Mini 6P	134
● XP6000 Series		
XP6111	S Mini 6P	136
XP6112	S Mini 6P	136
XP6113	S Mini 6P	136
XP6114	S Mini 6P	136
XP6115	S Mini 6P	136
XP6116	S Mini 6P	136
XP611FH	S Mini 6P	136
XP6210	S Mini 6P	136
XP6211	S Mini 6P	136
XP6212	S Mini 6P	136
XP6213	S Mini 6P	136
XP6214	S Mini 6P	136
XP6215	S Mini 6P	136
XP6216	S Mini 6P	136
XP6401	S Mini 6P	134
XP6435	S Mini 6P	134
XP6501	S Mini 6P	135
XP6534	S Mini 6P	135
XP06531	S Mini 6P	135
XP06545	S Mini 6P	135
● XP8000 Series		
XP8081	S Mini 6P	138

Composite Transistors

Type No.	Package	Page
UN601	Mini Power 6P	139
UN602	Mini Power 6P	139
UN603	Mini Power 6P	139
UN604	Mini Power 6P	139
UN801	Mini Power 6P	139

FETs

Type No.	Package	Page
2SJ146	Mini 3P	142
2SJ163	Mini 3P	141
2SJ164	NS	141
2SJ364	S Mini 3P	141
2SJ0398	U	142
△ 2SJ497	Mini 3P	138,141
2SK65	NS	141
2SK123	Mini 3P	141
2SK198	Mini 3P	141
2SK301	TO92	141
2SK374	Mini 3P	141
2SK601	Mini Power 3	142
2SK614	TO92	142
2SK615	M	142
2SK620	Mini 3P	142
2SK655	NS	142
2SK656	NS	142
2SK657	M	142
2SK662	Mini 3P	141
2SK663	Mini 3P	141
2SK664	Mini 3P	142
2SK665	Mini 3P	142
2SK690	Mini Power 3	147
2SK758	TO220F	143,145
2SK766	TO220F	145
2SK963	I	143,145
2SK1033	TO220F	143,145
2SK1035	TO220F	143,145
2SK1036	TO220F	143,145
2SK1103	Mini 3P	141
2SK1104	NS	141
2SK1214	TO220F	143,145
2SK1228	Mini 3P	142
2SK1255	TO220F	143,145
2SK1259	TOP3L	143,145
2SK1266	TO220F	143,145
2SK1267	TOP3	145
2SK1331	TOP3F	145
2SK1374	S Mini 3P	142
2SK1406	TOP3F	144,145
2SK1478	TO220F	143,145
2SK1605	TO220F	144,145
2SK1606	TO220F	144,145
2SK1607	TOP3	144,145
2SK1608	TO220F	144,145
2SK1609	TO220F	144,145
2SK1610	TOP3	144,145
2SK1611	TO220F	144,145
2SK1612	TO220F	144,145
2SK1613	TOP3	144,145
2SK1614	TOP3	144,145
2SK1635	TOP3L	143,145
2SK1803	TOP3F	144
2SK1833	TO220F	144,145
2SK1834	TO220F	144,145
2SK1842	Mini 3P	141
2SK1846	N	144,145
2SK1860	Flat Mini 3P	141
2SK1867	MT4	144
2SK1868	MT4	143
2SK1967	N	143,145
2SK1980	N	144,145
2SK2014	U	142,145
2SK2015	U	142,145
2SK2016	U	142,145
2SK2032	TOP3F	144,145
2SK2047	I	144,145
2SK2122	TO220E	143,145
2SK2123	TO220E	144,145
2SK2124	TO220E	144,145
2SK2125	TO220E	144,145
2SK2126	TO220E	144,145
2SK2127	TO220E	144,145
2SK2128	TO220E	144,145
2SK2129	TO220E	144,145
2SK2130	TO220E	144,145
2SK2210	TO220E	144,145
2SK2211	Mini Power 3	142
2SK2276	U	142,145
2SK2277	Mini Power 3	142,145
2SK2323	TO220E	144
2SK2324	TO220E	144
2SK2325	TO220E	144
2SK2326	TO220E	144
2SK2327	TOP3E	144
2SK2339	N	143
2SK2340	TO220E	144,145
2SK2342	U	142
2SK2374	TOP3E	144,145
2SK2375	TOP3E	144,145
2SK2377	TO220F(a)	143,145
2SK2380	SS Mini 3P	141
2SK2383	TOP3E	144,145
2SK2474	U	142
2SK2495	N	142
2SK2509	N	144,145
△ 2SK2537	Mini Power 3P	142
2SK2538	N	143,145
2SK2571	TOP3E	144,145
△ 2SK2572	TOP3F(a)	144,145
△ 2SK2573	TOP3E	144,145
2SK2574	TO220E	143,145
2SK2575	TO220E	143,145
2SK2576	TO220E	143,145
2SK2577	TO220E	143,145
2SK2578	TO220E	143,145
2SK2579	TO220E	143,145
2SK2580	TO220E	143,145
△ 2SK2581	TO220E	143,145
2SK2588	TO220E	143,145
2SK2593	SS Mini 3P	141
2SK2659	MT4	143,145
△ 2SK2660	U	142
2SK2751	Mini 3P	141
△ 2SK2772	U	142
△ 2SK2790	N	143,145
△ 2SK2797	U	142
△ 2SK2863	Mini 3P	138,141
3SK143	Mini 4P	124,141
3SK144	Mini 4P	124,141
3SK192	Mini 4P	141
3SK219	Mini 4P	124,141
3SK227	Mini 4P	124,141
3SK241	Mini 4P	124,147
3SK268	S Mini 4P	124,141
3SK269	S Mini 4P	124,141
3SK270	S Mini 4P	124,141
3SK271	S Mini 4P	124,141
3SK272	S Mini 4P	124,147
3SK273	S Mini 4P	124,147
3SK282	Mini 4P	147
3SK285	Mini 4P	124,141
3SK286	Mini 4P	124,141
3SK287	S Mini 4P	124,147
△ 3SK301	Mini 4P	141
△ 3SK302	Mini 4P	141
△ 3SK303	Mini 4P	141
△ 3SK304	Mini 4P	141
△ 3SK305	S Mini 4P	141
△ 3SK306	S Mini 4P	141
△ 3SK307	S Mini 4P	141
△ 3SK308	S Mini 4P	141

IPDs

Type No.	Package	Page
MIP102	SO28D	146
MIP103	HSOP24D	146
MIP106	HSOP24D	146
MIP108	HSOP24D	146
MIP109	HSOP24D	146
MIP111	HSOP24D	146
MIP115	HSOP24D	146
MIP153	TO220	146
MIP160	TO220	146
MIP161	U	146
MIP162	TO220	146
MIP163	TO220	146
MIP164	TO220	146
MIP165	TO220	146
MIP166	TO220	146
MIP170	TO220(c)	146
MIP172	TO220(c)	146
MIP173	TO220(c)	146
MIP174	TO220(c)	146
MIP175	TO220(c)	146
MIP176	TO220(c)	146
△ MIP403	DIL8	147
MIP501	MT3	147
MIP502	TO92NL	147
MIP503	TO92NL	147
MIP504	TO92NL	147
MIP506	MT3	147
MIP704	TO92NL	147
MIP705	U	147
MIP803	SSONF10D	147
MIP804	SSONF10D	147

IGBTs

Type No.	Package	Page
2PG301	N	146
2PG302	I	146
2PG351	I	146
2PG352	I	146
△ 2PG401	I	146

GaAs MMICs

Type No.	Package	Page
GN1042	Mini 4P	148
GN1044	Mini 4P	148
GN8061	DIL8	148
GN8062	DIL8	148

△Tentative

Type Number List

■ Discrete Devices

Type No.	Package	Page
● MMIC Series with Built-in Ferroelectric Substances		
GN1010	Mini 4P	148,149
△ GN01019B	Mini 6P	149
GN01032N	SSONF10D	149
△ GN01034N	SSONF10D	149
GN01037B	Mini 6P	149
GN01038B	Mini 6P	149
GN01039B	Mini 6P	149
△ GN01046B	Mini 6P	149
△ GN01047B	Mini 6P	149
△ GN01048B	Mini 6P	149
GN1051	Mini 6P	149
GN2011	Mini 6P	149
GN2012	S Mini 5P	149
GN02018B	Mini 6P	149
△ GN02019B	Mini 6P	149
GN4002	Mini 6P	149
GN4004	SSONF10D	149
GN04005	SSONF10D	149
GN05008N	SSOF10D	150
GN05009N	SO10D	150
GaAsPA Modules		
UN00301	PAM04-2	150
UN00303	PAM04-2	150
UN00304	PAM04-2	150
UN0036F	PAM04-2	150
△ UN0036H	PAM04-2	150
△ UN0037F	PAM04-3	150
△ UN0038F	PAM04-3	150
△ UN0039F	PAM04-3	150
UN00403	PAM04-2	150
UN00404	PAM04-2	150
△ UN0134H	PAM02-1	150
△ UN0134F	PAM02-1	150
Diodes		
MA27	DO35	153
MA27W	DO35	153
MA27T	DO35	153
MA27Q	DO35	153
MA28	Mini 3P	153
MA28W	Mini 3P	153
MA28T	Mini 3P	153
MA29	DO34	153
MA29W	DO34	153
MA29T	DO34	153
MA29Q	DO34	153
MA30	S Mini 2P	153
MA30W	S Mini 2P	153
MA57	Mini 3P	153
MA70	S Mini 3P	153
MA73	Mini 2P	153
MA75WA	Mini 3P	153
MA75WK	Mini 3P	153
MA77	S Mini 2P	153
MA78	Mini 6P	153
MA80WA	S Mini 3P	153
MA80WK	S Mini 3P	153
MA81	S Mini 2P	153
MA111	S Mini 2P	151
MA112	S Mini 2P	151
MA113	S Mini 2P	151
MA114	S Mini 2P	151
MA115	S Mini 2P	151
MA116	S Mini 2P	151

Type No.	Package	Page
MA121	Mini 6P	151
MA122	Mini 6P	151
MA123	Mini 6P	151
MA124	Mini 6P	151
MA125	Mini 6P	151
MA126	Mini 6P	151
MA127	Mini 6P	151
MA128	Mini 6P	151
MA129	Mini 6P	151
MA132A	SS Mini 3P	151
MA132HK	SS Mini 3P	151
MA132K	SS Mini 3P	151
MA132WA	SS Mini 3P	151
MA132WK	SS Mini 3P	151
MA133	SS Mini 3P	151
MA142A	S Mini 3P	151
MA142K	S Mini 3P	151
MA142WA	S Mini 3P	151
MA142WK	S Mini 3P	151
MA143/A	S Mini 3P	151
MA147	S Mini 3P	151
MA150	DO35	151
MA152A	Mini 3P	151
MA152HA	Mini 3P	151
MA152K	Mini 3P	151
MA152WA	Mini 3P	151
MA152WK	Mini 3P	151
MA153/A	Mini 3P	151
MA154WA	M	151
MA154WK	M	151
MA156	M	151
MA157A	Mini 3P	151
MA158	Mini 3P	151,153
MA159A	Mini 4P	151
MA160/A	Mini 4P	151
MA161	DO35	151
MA162	DO35	151
MA165	DO34	151
MA166	DO34	151
MA167	DO34	151
MA170	DO35	151
MA171	DO35	151
MA174	Mini 4P	151
MA175WA	NS	151
MA175WK	NS	151
MA176WA	NS	151
MA176WK	NS	151
MA177	NS	151
MA178	DO34	151
MA179	DO34	151
MA182	DO35	151
MA185	DO34	151
MA188	DO34	151
MA190	DO35	151
MA193	Mini 4P	151
MA194	Mini 4P	151
MA195	DO34	151
MA196	DO34	151
MA198	Mini 3P	151
MA199	Mini 3P	151
MA1U152A	T Mini 3P	151
MA1U152K	T Mini 3P	151
MA1U152WA	T Mini 3P	151
MA1U152WK	T Mini 3P	151
MA1U157A	T Mini 3P	151
MA10100	S Mini 3P	151
MA10152A	Flat Mini 3P	151
MA10152K	Flat Mini 3P	151

Type No.	Package	Page
MA10152D	Flat Mini 3P	151
MA10152E	Flat Mini 3P	151
MA10152F	Flat Mini 3P	151
MA10301	S Mini 2P	152
MA10700	S Mini 3P	156
MA10701	Mini 3P	156
MA10702	S Mini 3P	156
MA10703	Mini 3P	156
MA10704	S Mini 2P	156
MA10705	New Mini Power 2P	156
MA200A	Mini 3P	151
MA200K	Mini 3P	151
MA200WA	Mini 3P	151
MA200WK	Mini 3P	151
MA204WA	MT1	151
MA204WK	MT1	151
MA205WA	MT1	151
MA205WK	MT1	151
MA206	MT1	151
MA207	MT1	151
MA221	Leadless	151
MA222	Leadless	151
MA223	Leadless	151
MA291	Mini Power 2P	153
△ MA2H735	HNMP 2P	156
△ MA2H736	HNMP 2P	156
MA2D749/A	TO220D 2P	157
MA2D750/A	TO220D 2P	157
MA2D755	TO220D 2P	157
MA2D760	TO220D 2P	157
△ MA2QA01	New Mini Power 2P	153
△ MA2QA02	New Mini Power 2P	153
MA2QD01	New Mini Power 2P	156
MA2S077	SS Mini 2P	153
MA2S111	SS Mini 2P	151
MA2S304	SS Mini 2P	152
MA2S331	SS Mini 2P	152
MA2S357	SS Mini 2P	152
MA2S367	SS Mini 2P	152
MA2S372	SS Mini 2P	152
MA2S376	SS Mini 2P	152
MA2S728	SS Mini 2P	156
MA2S784	SS Mini 2P	156
MA2SV01	SS Mini 2P	152
MA2ZD02	S Mini 2P	156
MA2ZV01	S Mini 2P	152
MA2ZV02	S Mini 2P	152
MA2ZV03	S Mini 3P	152
MA304	S Mini 2P	152
MA321	Mini 2P	152
MA329	Mini 2P	152
MA331	S Mini 2P	152
MA333	Mini 2P	152
MA334	Mini 2P	152
MA335	Mini 2P	152
MA338	Mini 2P	152
MA339	Mini 2P	152
MA341	Mini 2P	152
MA344	Mini 6P	152
MA345	DO35	152
MA346	DO34	152
MA348	Mini 4P	152
MA357	S Mini 2P	152
MA360	S Mini 2P	152
MA362	S Mini 2P	152
MA365	S Mini 2P	152
MA366	S Mini 2P	152
MA367	S Mini 2P	152

Type No.	Package	Page
MA368	S Mini 2P	152
MA370	Mini 3P	152
MA371	S Mini 2P	152
MA372	S Mini 2P	152
MA372J	S Mini 2P	152
MA374	S Mini 2P	152
MA376	S Mini 2P	152
MA377	S Mini 2P	152
MA391	S Mini 2P	152
MA392	S Mini 2P	152
MA393	S Mini 2P	152
MA3U649	U	157
MA3U650	U	157
MA3U653	U	157
MA3U654	U	157
MA3U750	U	157
MA3U755	U	157
MA3U760	U	157
MA3X200F	Mini 3P	151
MA3Z551	S Mini 3P	157
MA4S159	S Mini 4P	151
MA4S713	S Mini 4P	156
MA551	Mini 3P	157
MA553	M	157
MA555	Mini 3P	157
MA556	Mini 6P	157
MA557	Mini 3P	157
MA558	Mini 3P	157
MA629	MT4	157
MA649	TO220F	157
MA650	TO220F	157
MA652	TO220F	157
MA653	TO220F	157
MA654	TO220F	157
MA655	TOP3F	157
MA689	TO220F	157
MA690	TO220F	157
MA693	TO220F	157
MA694	TO220F	157
MA695	TOP3F	157
MA6D49	TO220D	157
MA6D50	TO220D	157
MA6D52	TO220D	157
MA6D53	TO220D	157
MA6D54	TO220D	157
MA6D89	TO220D 2P	157
MA6D90	TO220D 2P	157
MA6D91	TO220D	157
MA6D93	TO220D	157
MA6D94	TO220D	157
MA6S121	S Mini 6P	151
MA6S718	S Mini 6P	156
MA700/A	DO34	156
MA701/A	Mini Power 2P	156
MA704/A	Mini 3P	156
MA704WA	Mini 3P	156
MA704WK	Mini 3P	156
MA707	Mini 2P	156
MA713	Mini 4P	156
MA714	Mini 4P	156
MA715	Mini 3P	156
MA716	Mini 3P	156
MA717	Mini 3P	156
MA717WA	Mini 3P	156
MA717WK	Mini 3P	156
MA718	Mini 6P	156
MA719	DO34	156
MA720	Mini 3P	156

△Tentative ▲Under development

■ Discrete Devices

Type No.	Package	Page
MA721	Mini 3P	156
MA721WA	Mini 3P	156
MA721WK	Mini 3P	156
MA723	DO34	156
MA724	Mini 4P	156
MA726	Mini 4P	156
MA727	Mini 3P	156
MA728	S Mini 2P	156
MA729	S Mini 2P	156
MA730	Mini 3P	156
MA732	S Mini 2P	156
MA735	New Mini Power 2P	156
MA736	New Mini Power 2P	156
MA737	New Mini Power 2P	156
MA738	New Mini Power 2P	156
MA739	New Mini Power 2P	156
MA740	Mini 3P	156
MA741	S Mini 3P	156
MA741WA	S Mini 3P	156
MA741WK	S Mini 3P	156
MA742	S Mini 3P	156
MA743	Mini 4P	156
MA744	S Mini 3P	156
MA745	S Mini 3P	156
MA745WA	S Mini 3P	156
MA745WK	S Mini 3P	156
MA746	Mini 4P	156
MA748	Mini 3P	156
MA749/A	TO220F	157
MA750/A	TO220F	157
MA751/A	TOP3F	157
MA752/A	TO220F	157
MA753/A	N	157
MA755	TO220F	157
MA756	TO220F	157
MA760	TO220F	157
MA761	TO220F	157
MA762	TOP3F	157
MA768	TO220F	157
MA769	TO220F	157
MA774	DO34	156
MA775	DO34	156
MA776	DO34	156
MA777	DO34	156
MA780	Leadless	156
MA781	SS Mini 3P	156
MA781WA/WK	SS Mini 3P	156
MA782	Leadless	156
MA784	S Mini 2P	156
MA785	S Mini 2P	156
MA786	Mini 3P	156
MA786WA	Mini 3P	156
MA786WK	Mini 3P	156
MA787	Mini 3P	156
MA788	Mini 3P	156
MA789	Mini 3P	156
MA790	Mini 3P	156
MA791	Mini 3P	156
MA792	S Mini 3P	156
MA792WA	S Mini 3P	156
MA792WK	S Mini 3P	156
MA793	S Mini 3P	156
MA795	SS Mini 3P	156
MA795WA	SS Mini 3P	156
MA795WK	SS Mini 3P	156
MA796	Mini 4P	156
MA7D49/A	TO220D	157
MA7D50/A	TO220D	157

Type No.	Package	Page
MA7D52/A	TO220D	157
MA7D55	TO220D	157
MA7D56	TO220D	157
MA7D60	TO220D	157
MA7D61	TO220D	157
MA7D68	TO220D	157
MA7D69	TO220D	157
MA7U49	U	157
MA840	DO34	152
MA856	DO34	153
MA858	DO34	153
MA859	DO34	153
MA860	Leadless	153
MA862	Mini 4P	153
MA950	Mini 6P	158
MA997	Mini 3P	158
MA999	Mini 4P	158
● MA1000 Series		
MA1020	DO35	154
MA1022	DO35	154
MA1024	DO35	154
MA1027	DO35	154
MA1030	DO35	154
MA1033	DO35	154
MA1036	DO35	154
MA1039	DO35	154
MA1043	DO35	154
MA1047	DO35	154
MA1051	DO35	154
MA1056	DO35	154
MA1062	DO35	154
MA1068	DO35	154
MA1075	DO35	154
MA1082	DO35	154
MA1091	DO35	154
MA1100	DO35	154
MA1110	DO35	154
MA1120	DO35	154
MA1130	DO35	154
MA1140	DO35	154
MA1150	DO35	154
MA1160	DO35	154
MA1180	DO35	154
MA1200	DO35	154
MA1220	DO35	154
MA1240	DO35	154
MA1270	DO35	154
MA1300	DO35	154
MA1330	DO35	154
MA1360	DO35	154
MA1390	DO35	154
● MA2000 Series		
MA2051	DO41	154
MA2056	DO41	154
MA2062	DO41	154
MA2068	DO41	154
MA2075	DO41	154
MA2082	DO41	154
MA2091	DO41	154
MA2100	DO41	154
MA2110	DO41	154
MA2120	DO41	154
MA2130	DO41	154
MA2150	DO41	154
MA2160	DO41	154
MA2180	DO41	154

Type No.	Package	Page
MA2200	DO41	154
MA2220	DO41	154
MA2240	DO41	154
MA2270	DO41	154
MA2300	DO41	154
MA2330	DO41	154
MA2360	DO41	154
MA2390	DO41	154
MA2430	DO41	154
MA2470	DO41	154
MA2510	DO41	154
MA2560	DO41	154
● MA3000 Series		
MA3024	Mini 3P	154
MA3027	Mini 3P	154
MA3030	Mini 3P	154
MA3033	Mini 3P	154
MA3036	Mini 3P	154
MA3039	Mini 3P	154
MA3043	Mini 3P	154
MA3047	Mini 3P	154
MA3051	Mini 3P	154
MA3056	Mini 3P	154
MA3062	Mini 3P	154
MA3068	Mini 3P	154
MA3075	Mini 3P	154
MA3082	Mini 3P	154
MA3091	Mini 3P	154
MA3100	Mini 3P	154
MA3110	Mini 3P	154
MA3120	Mini 3P	154
MA3130	Mini 3P	154
MA3140	Mini 3P	154
MA3150	Mini 3P	154
MA3160	Mini 3P	154
MA3180	Mini 3P	154
MA3200	Mini 3P	154
MA3220	Mini 3P	154
MA3240	Mini 3P	154
MA3270	Mini 3P	154
MA3300	Mini 3P	154
MA3330	Mini 3P	154
MA3360	Mini 3P	154
● MA3000W Series		
MA3047W	Mini 4P	153
MA3056W	Mini 4P	153
MA3062W	Mini 4P	153
MA3062WA	Mini 3P	153
MA3075WA	Mini 3P	153
MA3075WK	Mini 3P	153
MA3075T	Mini 4P	153
MA3082WA	Mini 3P	153
MA3091WK	Mini 3P	153
MA3100W	Mini 4P	153
MA3100WA	Mini 3P	153
MA3100WK	Mini 3P	153
MA3120WA	Mini 3P	153
MA3130WA	Mini 3P	153
MA3200W	Mini 4P	153
MA3200WA	Mini 3P	153
MA3360S	Mini 3P	153
MA3A100	Mini 6P	153
MA03270R	Mini 6P	153

Type No.	Package	Page
● MA4000 Series		
MA4020	DO34	154
MA4022	DO34	154
MA4024	DO34	154
MA4027	DO34	154
MA4030	DO34	154
MA4033	DO34	154
MA4036	DO34	154
MA4039	DO34	154
MA4043	DO34	154
MA4047	DO34	154
MA4051	DO34	154
MA4056	DO34	154
MA4062	DO34	154
MA4068	DO34	154
MA4075	DO34	154
MA4082	DO34	154
MA4091	DO34	154
MA4091X	DO34	153
MA4100	DO34	154
MA4110	DO34	154
MA4120	DO34	154
MA4130	DO34	154
MA4140	DO34	154
MA4150	DO34	154
MA4160	DO34	154
MA4180	DO34	154
MA4200	DO34	154
MA4220	DO34	154
MA4240	DO34	154
MA4270	DO34	154
MA4300	DO34	154
MA4330	DO34	154
MA4360	DO34	154
MA4390	DO34	154
● MA5000 Series		
MA5047	Mini Power 2P	154
MA5051	Mini Power 2P	154
MA5056	Mini Power 2P	154
MA5062	Mini Power 2P	154
MA5068	Mini Power 2P	154
MA5075	Mini Power 2P	154
MA5082	Mini Power 2P	154
MA5091	Mini Power 2P	154
MA5100	Mini Power 2P	154
MA5110	Mini Power 2P	154
MA5120	Mini Power 2P	154
MA5130	Mini Power 2P	154
MA5150	Mini Power 2P	154
MA5160	Mini Power 2P	154
MA5180	Mini Power 2P	154
MA5200	Mini Power 2P	154
MA5220	Mini Power 2P	154
MA5240	Mini Power 2P	154
● MA7000 Series		
MA7051	DO41	154
MA7056	DO41	154
MA7062	DO41	154
MA7068	DO41	154
MA7075	DO41	154
MA7082	DO41	154
MA7091	DO41	154
MA7100	DO41	154
MA7110	DO41	154
MA7120	DO41	154
MA7130	DO41	154

△Tentative

Type Number List

■ Discrete Devices/Opto-Electronic Devices

Type No.	Package	Page
MA7150	DO41	154
MA7160	DO41	154
MA7180	DO41	154
MA7200	DO41	154
MA7220	DO41	154
MA7240	DO41	154
MA7270	DO41	154
MA7300	DO41	154
MA7330	DO41	154
MA7360	DO41	154
MA7390	DO41	154
MA7430	DO41	154
MA7470	DO41	154
MA7510	DO41	154
MA7560	DO41	154
● MA8000 Series		
MA8024	S Mini 2P	154
MA8027	S Mini 2P	154
MA8030	S Mini 2P	154
MA8033	S Mini 2P	154
MA8036	S Mini 2P	154
MA8039	S Mini 2P	154
MA8043	S Mini 2P	154
MA8047	S Mini 2P	154
MA8051	S Mini 2P	154
MA8056	S Mini 2P	154
MA8062	S Mini 2P	154
MA8068	S Mini 2P	154
MA8075	S Mini 2P	154
MA8082	S Mini 2P	154
MA8091	S Mini 2P	154
MA8100	S Mini 2P	154
MA8110	S Mini 2P	154
MA8120	S Mini 2P	154
MA8130	S Mini 2P	154
MA8140	S Mini 2P	154
MA8150	S Mini 2P	154
MA8160	S Mini 2P	154
MA8180	S Mini 2P	154
MA8200	S Mini 2P	154
MA8220	S Mini 2P	154
MA8240	S Mini 2P	154
MA8270	S Mini 2P	154
MA8300	S Mini 2P	154
MA8330	S Mini 2P	154
MA8360	S Mini 2P	154
● MA1Z Series		
MA1Z047	New Mini Power 2P	154
MA1Z051	New Mini Power 2P	154
MA1Z056	New Mini Power 2P	154
MA1Z062	New Mini Power 2P	154
MA1Z068	New Mini Power 2P	154
MA1Z075	New Mini Power 2P	154
MA1Z082	New Mini Power 2P	154
MA1Z091	New Mini Power 2P	154
MA1Z100	New Mini Power 2P	154
MA1Z110	New Mini Power 2P	154
MA1Z120	New Mini Power 2P	154
MA1Z130	New Mini Power 2P	154
MA1Z150	New Mini Power 2P	154
MA1Z160	New Mini Power 2P	154
MA1Z180	New Mini Power 2P	154
MA1Z200	New Mini Power 2P	154
MA1Z220	New Mini Power 2P	154
MA1Z240	New Mini Power 2P	154
MA1Z270	New Mini Power 2P	154

Type No.	Package	Page
MA1Z300	New Mini Power 2P	154
MA1Z330	New Mini Power 2P	154
MA1Z360	New Mini Power 2P	154
MA1Z390	New Mini Power 2P	154
MA1Z430	New Mini Power 2P	154
MA1Z470	New Mini Power 2P	154
MA1Z510	New Mini Power 2P	154
● MA2Z Series		
MA2Z200	New Mini Power 2P	155
MA2Z220	New Mini Power 2P	155
MA2Z240	New Mini Power 2P	155
MA2Z270	New Mini Power 2P	155
MA2Z300	New Mini Power 2P	155
MA2Z330	New Mini Power 2P	155
● MA4Z Series		
MA4Z082WA	SS Mini 3P	155
● MA5Z Series		
MA5Z200	S Mini 2P	155
MA5Z220	S Mini 2P	155
MA5Z240	S Mini 2P	155
MA5Z270	S Mini 2P	155
MA5Z300	S Mini 2P	155
MA5Z330	S Mini 2P	155
● MA6Z Series		
MA6Z100WA/WK	S Mini 3P	153
● MA7Z Series		
MA7Z024	SS Mini 2P	155
MA7Z027	SS Mini 2P	155
MA7Z030	SS Mini 2P	155
MA7Z033	SS Mini 2P	155
MA7Z036	SS Mini 2P	155
MA7Z039	SS Mini 2P	155
MA7Z043	SS Mini 2P	155
MA7Z047	SS Mini 2P	155
MA7Z051	SS Mini 2P	155
MA7Z056	SS Mini 2P	155
MA7Z062	SS Mini 2P	155
MA7Z068	SS Mini 2P	155
MA7Z075	SS Mini 2P	155
MA7Z082	SS Mini 2P	155
MA7Z091	SS Mini 2P	155
MA7Z100	SS Mini 2P	155
MA7Z110	SS Mini 2P	155
MA7Z120	SS Mini 2P	155
MA7Z130	SS Mini 2P	155
MA7Z140	SS Mini 2P	155
MA7Z150	SS Mini 2P	155
MA7Z160	SS Mini 2P	155
MA7Z180	SS Mini 2P	155
MA7Z200	SS Mini 2P	155
MA7Z220	SS Mini 2P	155
MA7Z240	SS Mini 2P	155
MA7Z270	SS Mini 2P	155
MA7Z300	SS Mini 2P	155
MA7Z330	SS Mini 2P	155
MA7Z360	SS Mini 2P	155
MA7Z390	SS Mini 2P	155
●MAZ Series		
MAZ9062D	Mini 3P	154
●MAZC Series		
MAZC062D	Mini 3P	154

Type No.	Package	Page
●MAZK/L Series		
MAZK068D	Mini 5P	155
MAZK270D	Mini 5P	155
MAZL062D	Mini 5P	155
MAZL068D	Mini 5P	155
MAZL120D	Mini 5P	155
●MAZS Series		
MAZS024	SS Mini 2P	155
MAZS027	SS Mini 2P	155
MAZS030	SS Mini 2P	155
MAZS033	SS Mini 2P	155
MAZS036	SS Mini 2P	155
MAZS039	SS Mini 2P	155
MAZS043	SS Mini 2P	155
MAZS047	SS Mini 2P	155
MAZS051	SS Mini 2P	155
MAZS056	SS Mini 2P	155
MAZS062	SS Mini 2P	155
MAZS068	SS Mini 2P	155
MAZS075	SS Mini 2P	155
MAZS082	SS Mini 2P	155
MAZS091	SS Mini 2P	155
MAZS100	SS Mini 2P	155
MAZS110	SS Mini 2P	155
MAZS120	SS Mini 2P	155
MAZS130	SS Mini 2P	155
MAZS140	SS Mini 2P	155
MAZS150	SS Mini 2P	155
MAZS160	SS Mini 2P	155
MAZS180	SS Mini 2P	155
MAZS200	SS Mini 2P	155
MAZS220	SS Mini 2P	155
MAZS240	SS Mini 2P	155
MAZS270	SS Mini 2P	155
MAZS300	SS Mini 2P	155
MAZS330	SS Mini 2P	155
MAZS360	SS Mini 2P	155
MAZS390	SS Mini 2P	155
●MAZH Series		
MAZH062	HNMP 2P	155
MAZH120	HNMP 2P	155
●MAZV Series		
MAZV082D	S Mini 3P	155

GaAs Hall Elements

Type No.	Package	Page
● Hall Elements		
OH003/4	Mini 4P/convex	158
OH008	Mini 4P (Thin type) convex	158
OH009/010	Mini 4P/convex	158
OH017	Mini 4P (Thin type)	158
OH023	Mini 4P	158

InSb Hall Elements

Type No.	Package	Page
OH00033	Mini 4P	158
OH00035	Mini 4P	158
OH00036	S Mini 4P	158

Triggers

Type No.	Package	Page
MA2R064	Leadless	158
MA64	DO35	158

Hybrid ICs

Type No.	Package	Page
△ UNC0101	—	131

Infrared Light Emitting Diodes (incl. visible)

Type No.	Package	Page
LN51F	TO18	161
LN51L	TO18	161
LN52	TO18 (Small)	161
LN54	Side View	161
LN55	Side View	161
LN57	Double End	161
LN58	Side View	161
LN59	Double Direction	161
LN59L	Double Direction (Long Lead)	161
LN62S	3φ Ceramic	161
LN65	Side View	161
LN66	5φ Plastic	161
LN66A	5φ Plastic	161
LN66F	5φ Plastic	161
LN66(L)	5φ (Long Lead)	161
LN66(NC)	5φ (Dark Blue)	161
LN68	3φ Plastic	161
LN69	3φ Plastic	161
LN75X	Side View	161
LN77L	5φ Plastic	161
LN78	5φ Plastic	161
LN124W	5φ Plastic	161
LN145W	Side View	161
△ LN151L/F	TO18	161
LN152	TO18 (Small)	161
LN155	Side View	161
LN159	Double Direction	161
LN162S	3φ Plastic	161
LN166	5φ Plastic	161
LN172	TO18 (Small)	161
LN175	Side View	161
LN184	TO18	161
LN189L	Mini Mold	161
LN189M	Mini Mold	161
LN189S	Mini Mold	161
LN671	Flat	161
▲ LNA2601L	Side View	161
▲ LNA2602L	Side View	161
LNA2801L	3φ Plastic	161
LNA2901L	5φ Long Lead	161
LNA4201F	Flat Package	161
LNA4401L	TO18	161
LNA4402F	TO18	161
LNA4601L	Side View	161
LNA4801L	3φ Plastic	161
▲ LNA4802L	3φ Plastic	161
LNA4902L	5φ Long Lead	161
▲ LNA4904L	5φ Plastic	161

△Tentative

Opto-Electronic Devices

Laser Diodes

Type No.	Package	Page
LN7301	Round 9φ	161
LN7301F	Round 9φ	161
LN7301S	Round 9φ	161
LN9P01S	Round 5φ	161
LN9P03S/MS	Round 9φ	161
LN9R05MS	Round 9φ	161
LN9R05NS	Round 9φ	161
LNCR01PS	Round 5φ	161
LNC701PS	Round 5φ	161
LNC702DS/MS/PS	Round 5φ	161
LNC703PS	Round 5φ	161
LNC704PS	Round 5φ	161
LNC705PS	Round 5φ	161
LNC802DS/MS/PS	Round 5φ	161

Laser Modules

Type No.	Package	Page
LN7301M005	—	161

Photo Detectors

Type No.	Package	Page
PN101/F	TO18	162
PN102/F	TO18	162
PN106	TO18	162
PN107/F	TO18	162
PN108/F	TO18	162
PN108CL	TO18 (Small)	162
PN109F	TO18	162
PN109CL	TO18	162
PN109L	TO18	162
PN110	5φ Ceramic	162
PN111W	5φ Ceramic	162
PN115	Side View	162
PN116	Side View	162
PN120S	3φ Ceramic	162
PN121S	3φ Ceramic	162
PN123S	3φ Ceramic	162
PN126S	3φ Ceramic	162
PN127	Double End	162
PN147	Double End	162
PN150/L	Side View	162
PN154	Side View	162
PN155	Side View	162
PN158	Side View	162
PN163(NC)	Side View	162
PN166	Side View	162
PN168	3φ Plastic	162
PN202S	3φ Ceramic	162
PN205/L(NC)	Side View	162
PN207	Double End	162
PN208	Side View	162
PN263L-(NC)	Side View	162
PN268-(NC)	3φ Plastic	162
PN300	TO18	162
PN300F	TO18	162
PN303	TO39	162
PN307	Double End	162
PN312D(N)	Flat	162
PN313	Side View	162
PN313B	Side View	162
PN316K2	Flat (Clear)	162
PN322D	Flat	162
PN323	TO92	162
PN323B	TO92	162
PN327	Double End	162
PN328B	TO92	162
PN330CL	TO18 (Small)	162
PN331CL	TO18 (Small)	162
PN331F	TO18	162
PN332F	TO18	162
PN334	5φ Plastic	162
PN335	Side View	162
PN335-004	—	163
PN3108	Flat (Clear)	162
PN3112	Flat	162
PN3116	Flat (Clear)	162
PN3206	Flat (Clear)	162
PN3405	Flat (Clear)	162
PN3624K	Flat (Clear)	162
PN7103	Side View	162
PNA3201F	Flat (Clear)	162
▲ PNA3601M	Side View	162
△ PNA4211F	4*5 FLAT 10P	162
PNA4601M	Side View	162
PNA4602M	Side View	162
PNA4603H	Side View	162
PNA4605M	Side View	162
PNA4608M	Side View	162
△ PNA4610M	Side View	162
PNA4611M	Side View	162
PNA4612M	Side View	162
△ PNA4613M	Side View	162
PNA4614M	Side View	162

Photo Couplers

Type No.	Page
ON1002	163
ON1003	163
ON1004	163
ON1021	163
ON1022	163
ON1023	163
ON1024	163
ON1102	163
ON1105	163
ON1108	163
ON1109	163
ON1110	163
ON1111	163
ON1112	163
ON1113	163
ON1114	163
ON1120	163
ON1122	163
ON1128	163
ON1128S	163
ON1179	163
ON1215	163
ON1402A/B	163
ON1403A/B	163
ON1413A/B	163
ON1414A/B	163
ON1501	162
ON1503	162
ON1517HH-(A)	162
ON2152	163
ON2153	163
ON2170	163
ON2171	163
ON2173	163
ON2175	163
ON2179	163
ON2180	163
ON2253	163
ON2270	163
ON2280	163
ON2509	162
ON2521LA-(A)	162
ON3105	163
ON3131	163
ON3132	163
ON3133	163
ON3134	163
ON3171	163
ON3181	163
ON3182	163
ON3183	163
ON3184	163
ON3205	163
ON3401	163
ON3731/A	163
ON3732/A	163
ON3734/A	163
CNA1003H	163
CNA1006N	163
CNA1301H	163
△ CNA1311K	163
△ CNA1312K	163
CNB1001	163
CNB1002	163
△ CNB1003	163
△ CNB1004	163
△ CNB1005	163
CNB2001	163
△ CNB2002	163
CNB2003	163
△ CNB2004	163
△ CND0002A	163
HUL7001	163
△ HUL7202	163
△ HUL7281	163

Visible Light Emitting Diodes

Type No.	Page
LN01201C(Q)	167
LN01201C(Q)-(L)	167
LN01201CAL(U)	167
LN01203C-(L)	167
LN01301C(Q)	167
LN01301C(Q)-(L)	167
LN01303C-(L)	167
LN01401C(Q)	167
LN01401C(Q)-(L)	167
LN01403C-(L)	167
LN01801C(Q)	167
LN01801C(Q)-(L)	167
LN1251C-(TR)	167
LN1251CAL-(TR)	167
LN1261C-(TR)	167
LN1261CAL-(TR)	167
LN1271R-(TR)	167
LN1271RAL-(TR)	167
LN1351C-(TR)	167
LN1361C-(TR)	167
LN1371G-(TR)	167
LN1371G-6U(TR)	167
LN1451C-(TR)	167
LN1461C-(TR)	167
LN1471Y-(TR)	167
LN1851C-(TR)	167
LN1861C-(TR)	167
LN1871Y5-(TR)	167
LN213RPP	166
LN216RP	166
LN216RPH	166
LN2162C13-(TR)	167
LN2162C68-(TR)	167
LN217RP	166
LN217RPH	166
LN219RP	166
LN21CAL(U)	167
LN21CAL(UQS)	167
LN21CAL(UQPS)	167
LN21CPH	165
LN21CPHL	165
LN21CPSL	165
LN21RAL(U)	167
LN21RCAL(U)	167
LN21RCPH	165
LN21RCPHL	165
LN21RCPSL	165
LN21RCPSS	165
LN21RPH	165
LN21RPH-(TA)	168
LN21RPH-(TA2)	168
LN21RPH-(TA3)	168
LN21RPH-(TA5)	168
LN21RPH-(TT2)	168
LN21RPH-(TT5)	168
LN21RPHL	165

△Tentative ▲Under development

Type Number List

■ Opto-Electronic Devices

△Tentative

■ Opto-Electronic Devices

△Tentative

Application Block Diagrams

Contents

■ Video Applications

① VCR System

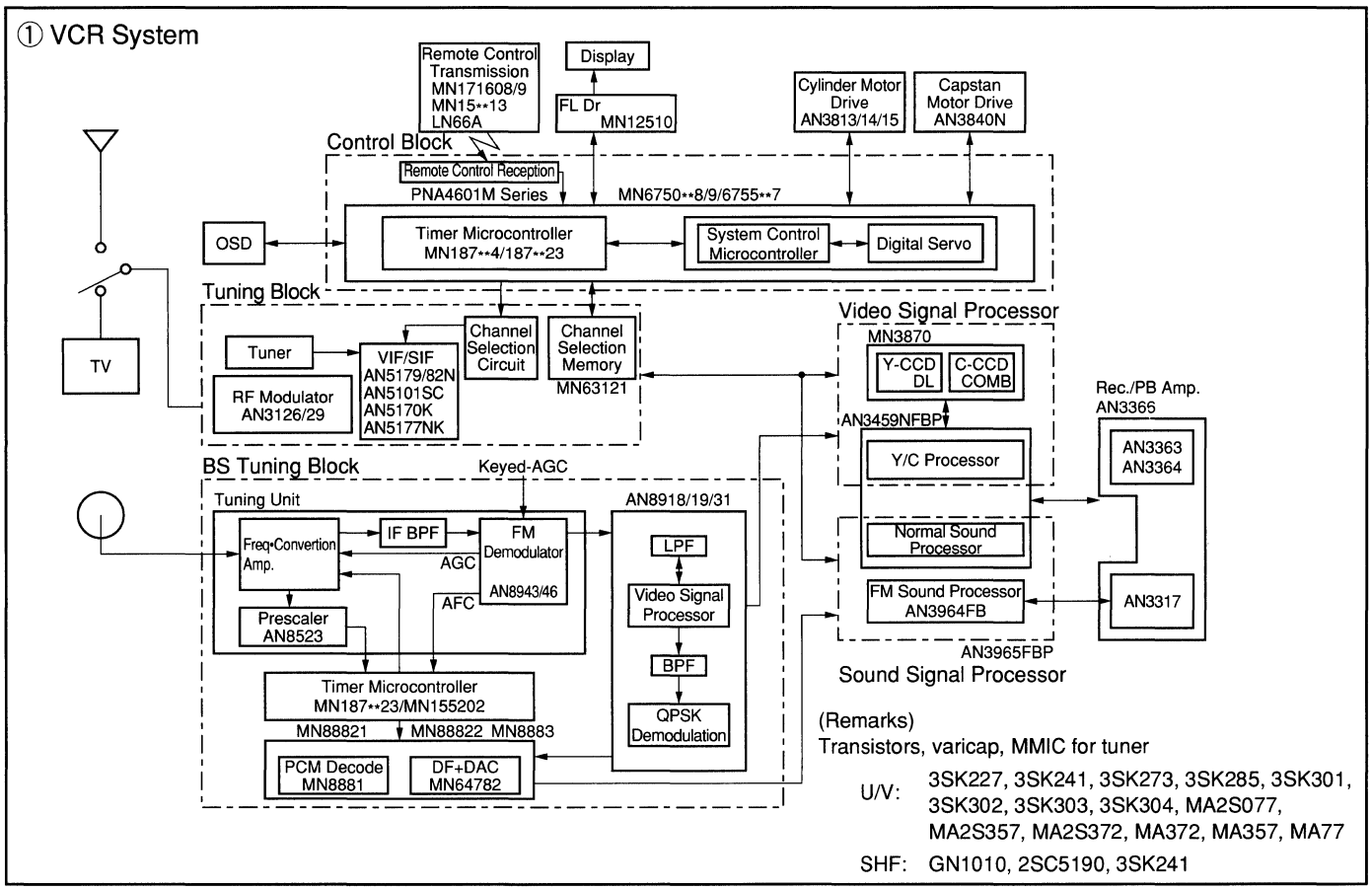

② TV-VCR Combination

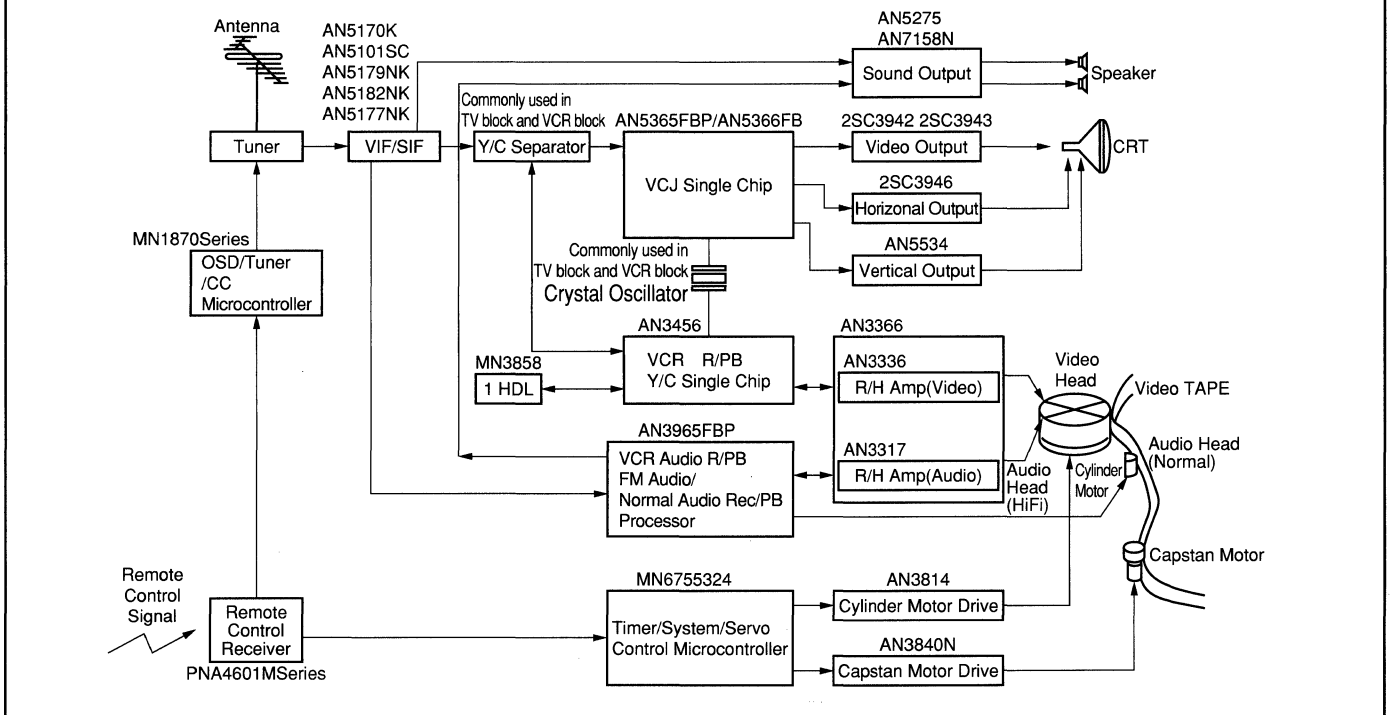

(Remarks) For tuner	Transistor	MOSFET:	3SK227, 3SK285, 3SK301, 3SK302, 3SK303, 3SK304
		GaAs MESFET:	3SK241, 3SK273
	Varicap	UHF MA372, MA357, MA2S372, MA2S357	
		VHF MA357, MA77, MA2S357, MA2S077	

Application Block Diagrams

■ Video Applications

③Video Camera System

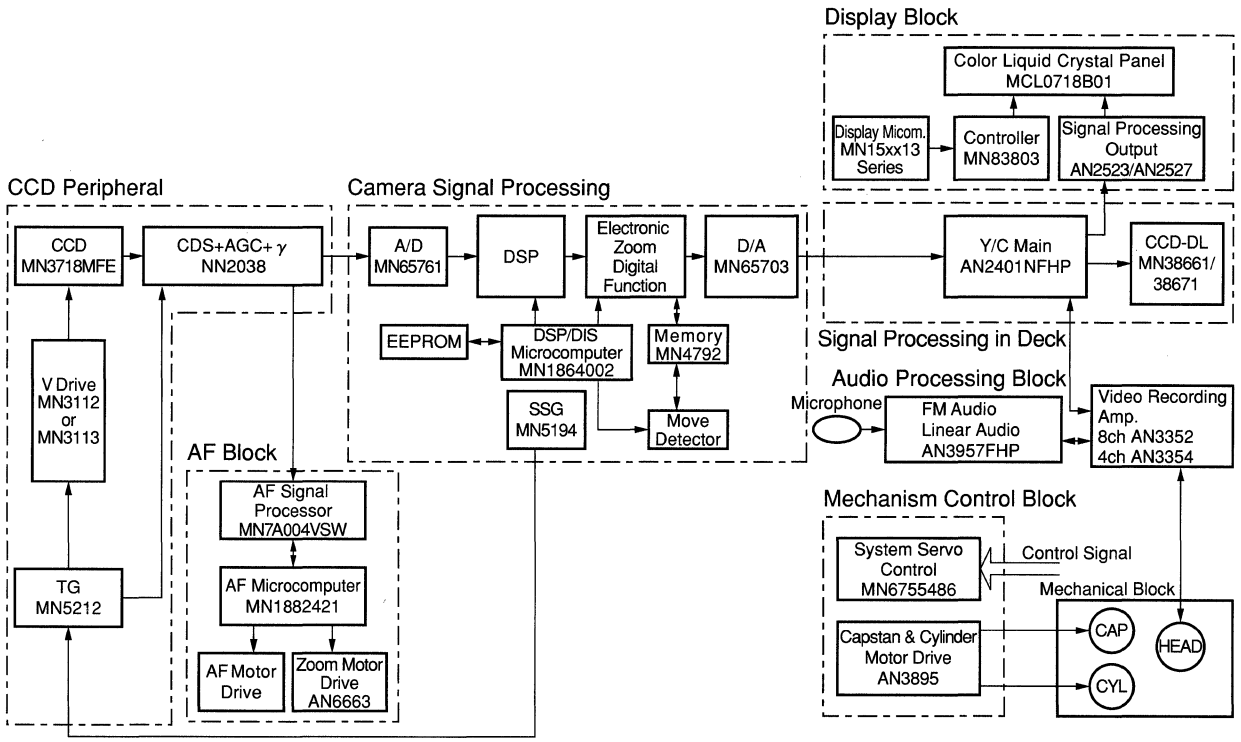

④Color TV (NTSC) — (1)

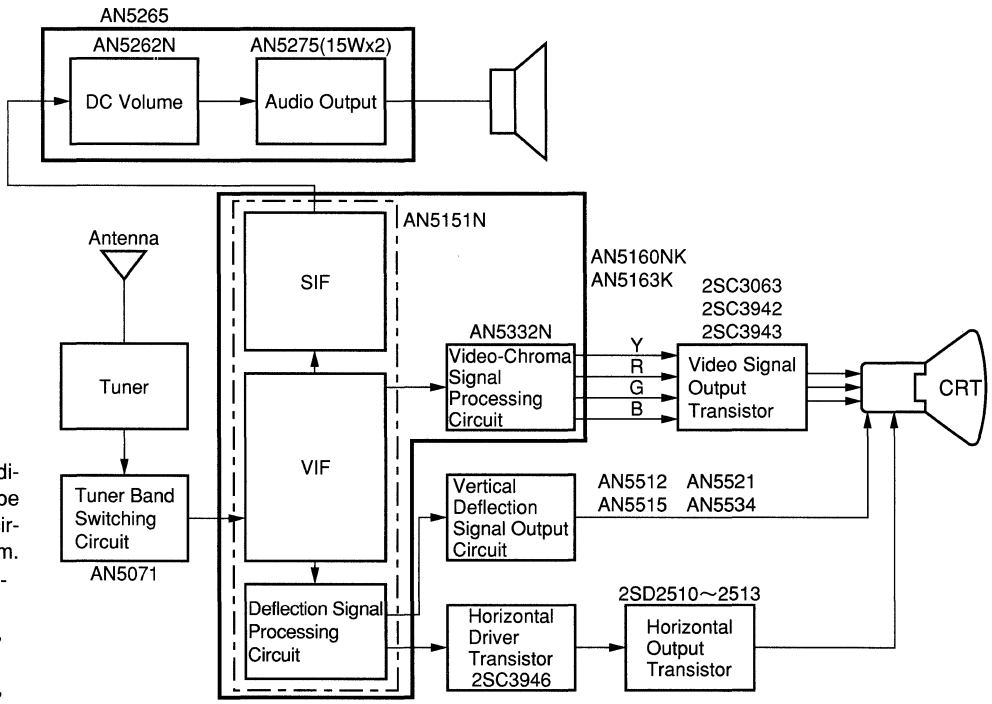

Note) The transistors and diodes listed below can be used for the peripheral circuits in this block diagram.

- Transistor with built-in resistors for interface: UN4000/UN2000 Series, etc.
- Switching diode: MA165, MA111, etc.
- Tuner (RF MOS FET, VARI- CAP BAND SW Di, Refer to ⑤ (Note 1)).

■ Video Applications

⑤ Color TV (NTSC) — (2)

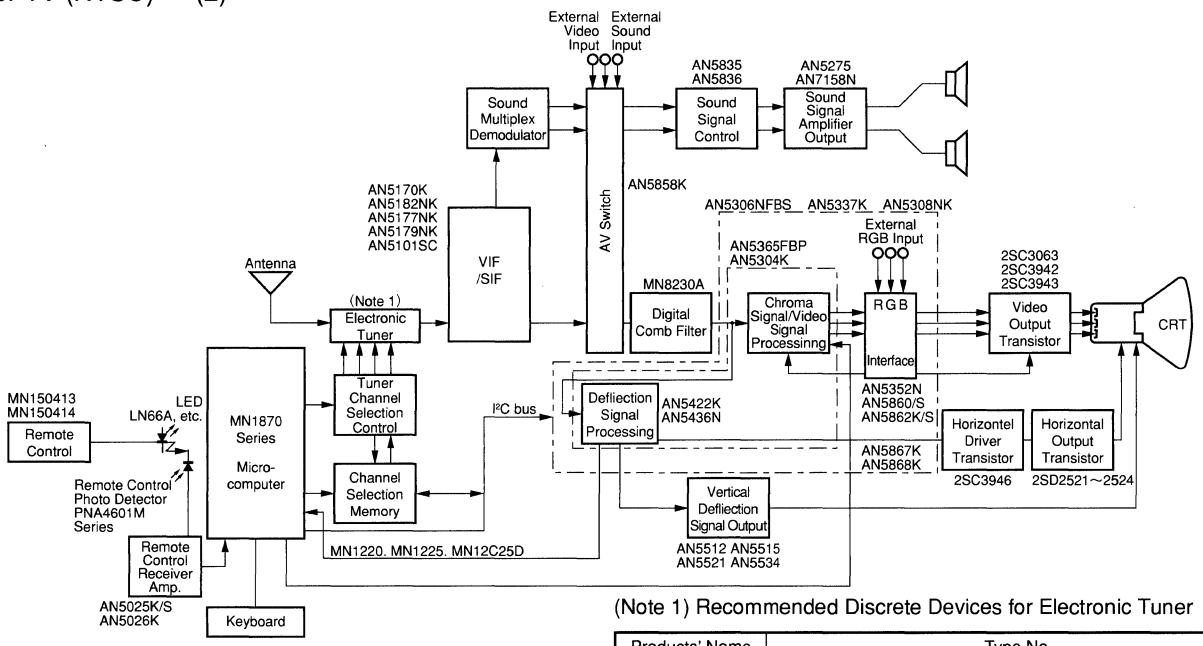

(Note 1) Recommended Discrete Devices for Electronic Tuner

Products' Name	Type No.
Transistor	2SC2404, 2SC2480, 2SC3077, 2SC3130, 2SC3932, 2SC3933, 2SC3935, 2SC5016
FET	3SK227, 3SK241, 3SK247, 3SK273, 3SK280, 3SK301, 3SK302, 3SK303, 3SK304, 3SK285
SW, Varicap	MA73, MA77, MA80WA/WK, MA339, MA353, MA371, MA372, MA338, MA366, MA859, MA862, MA2S372
Visible LED	LN524GA, LN526GA, LN21RCPH ×4, LN21RPH ×8, LN253RPL ×12

Note) The transistors and diodes listed below can be used for the peripheral circuits in this block diagram.
2SA1309A, 2SC3311A, etc.

- Transistor with built-in resistors for interface: UN4000/UN2000 Series, etc.
- Switching diode: MA165, MA111 etc.

⑥ Color TV (PAL/SECAM)

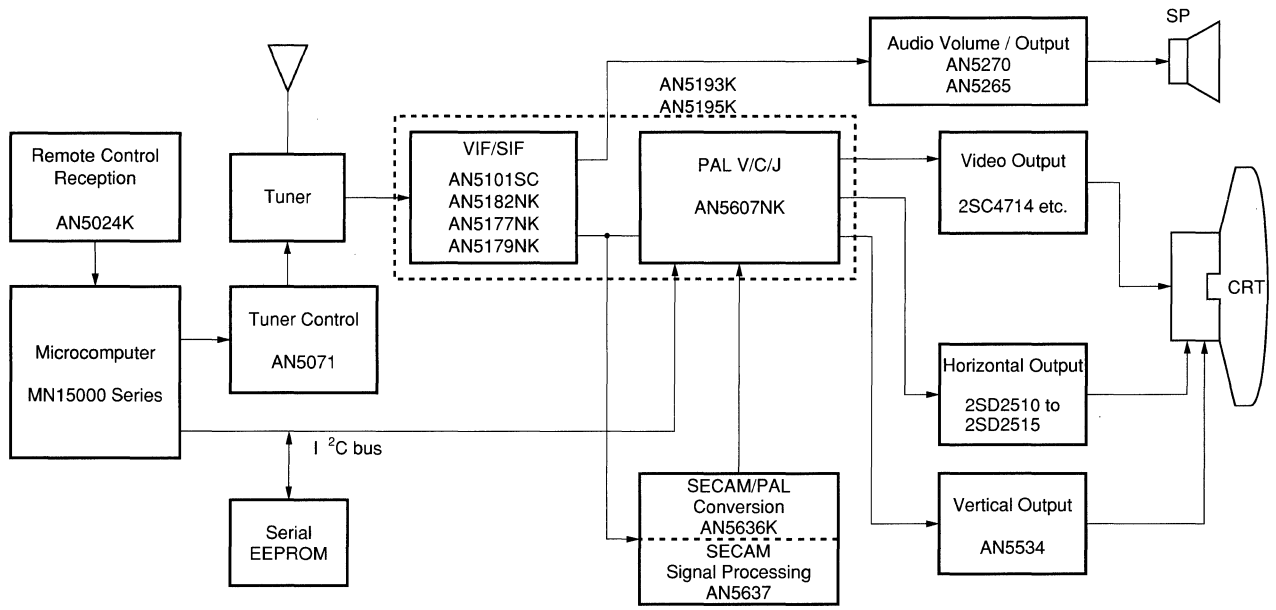

▲Under development

Application Block Diagrams

■ Video Applications

⑦ Liquid Crystal Display TV

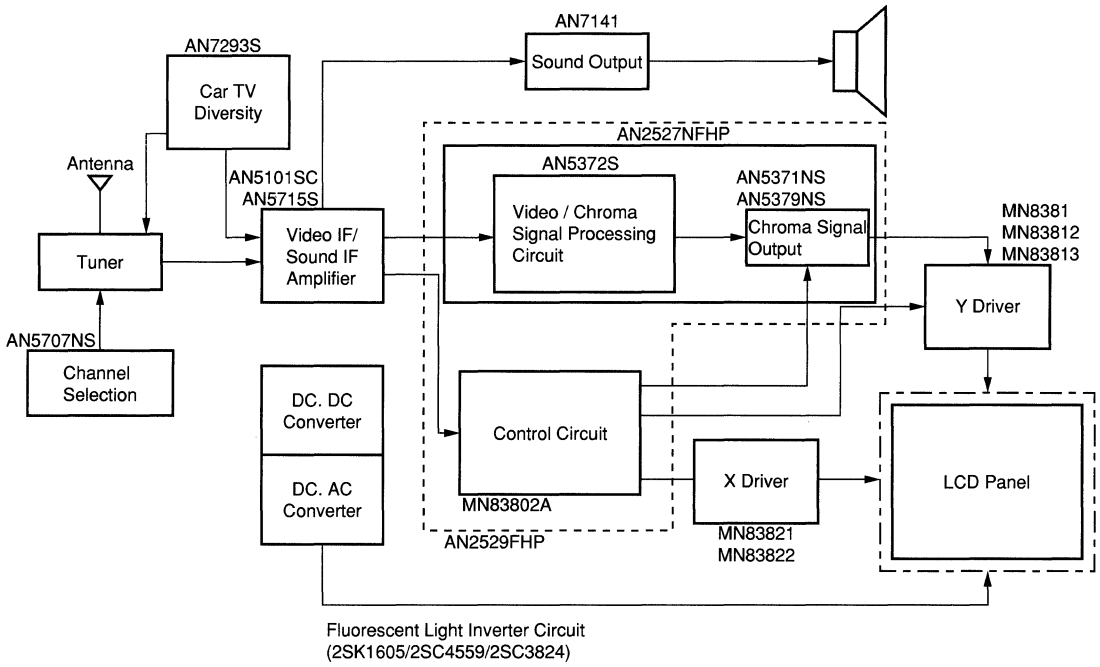

⑧ BS/CS Tuner System

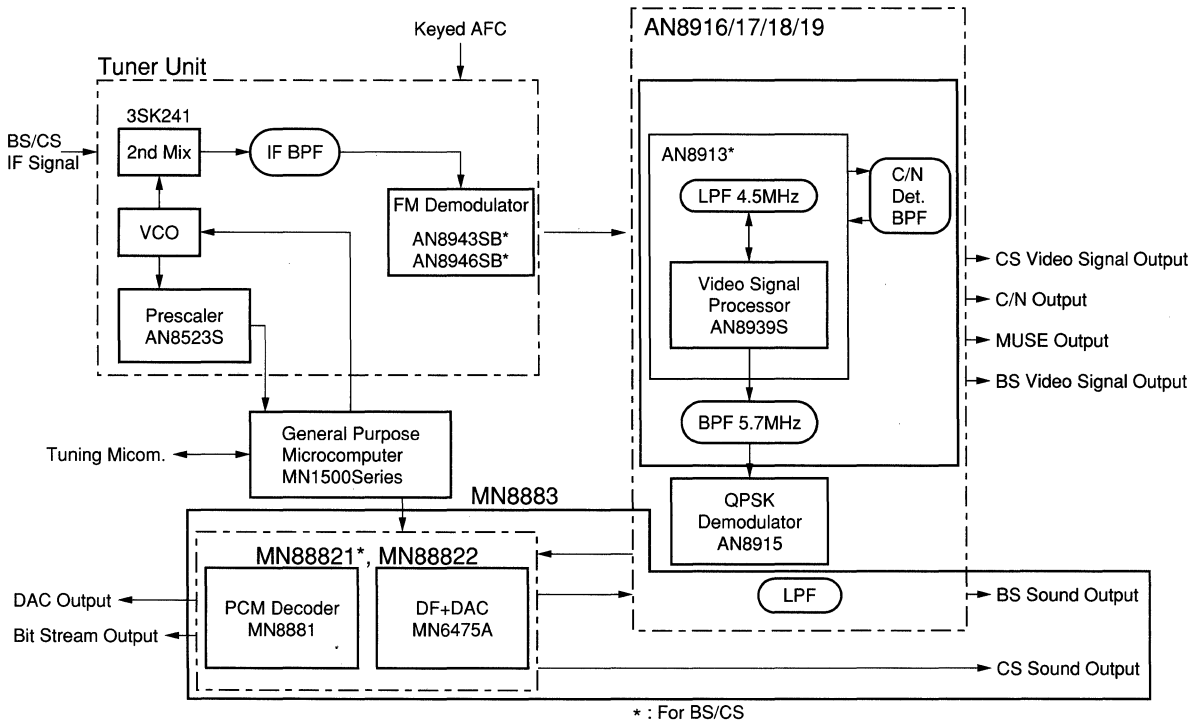

* : For BS/CS

■ Audio Applications

⑨ Color CRT Monitor

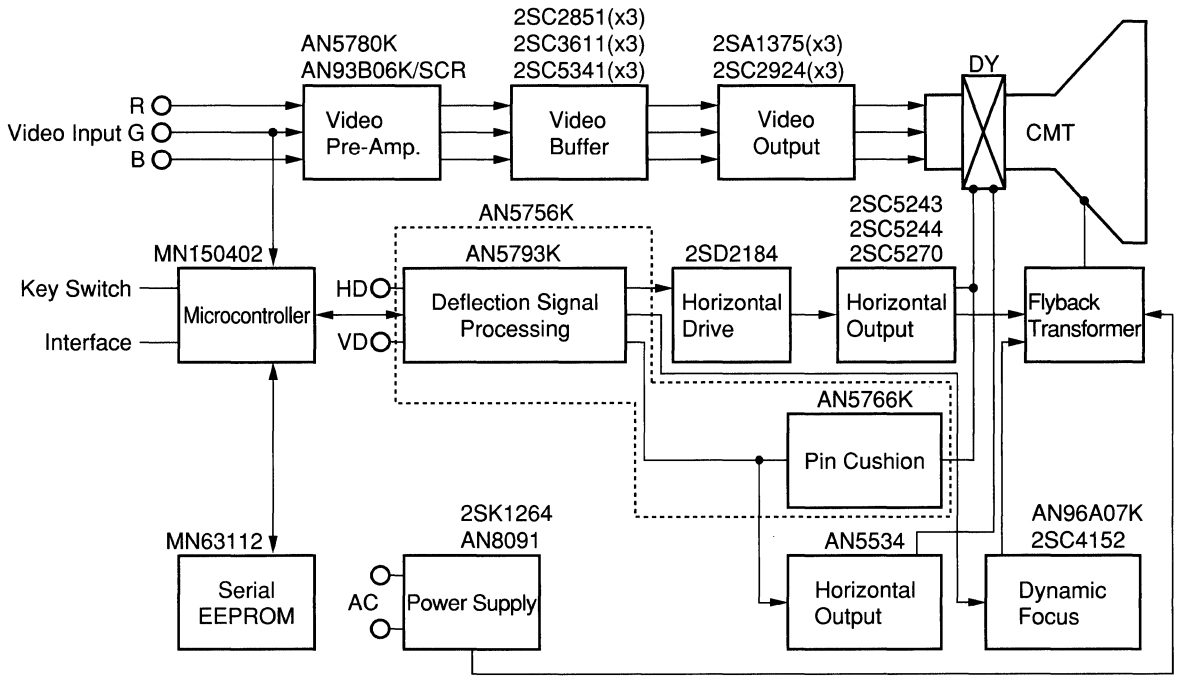

Application Block Diagrams

■ Audio Applications

① CD Player

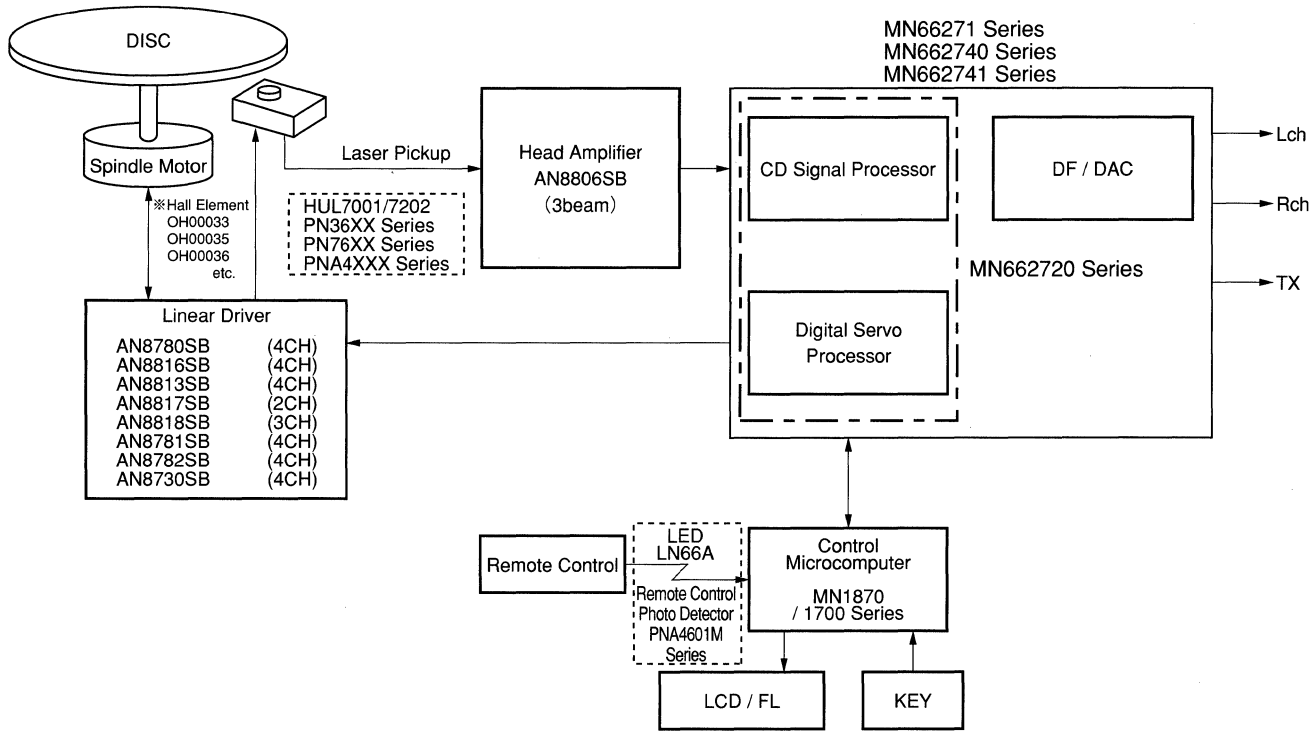

② Hi-Fi Stereo Tuner/Audio Amplifier

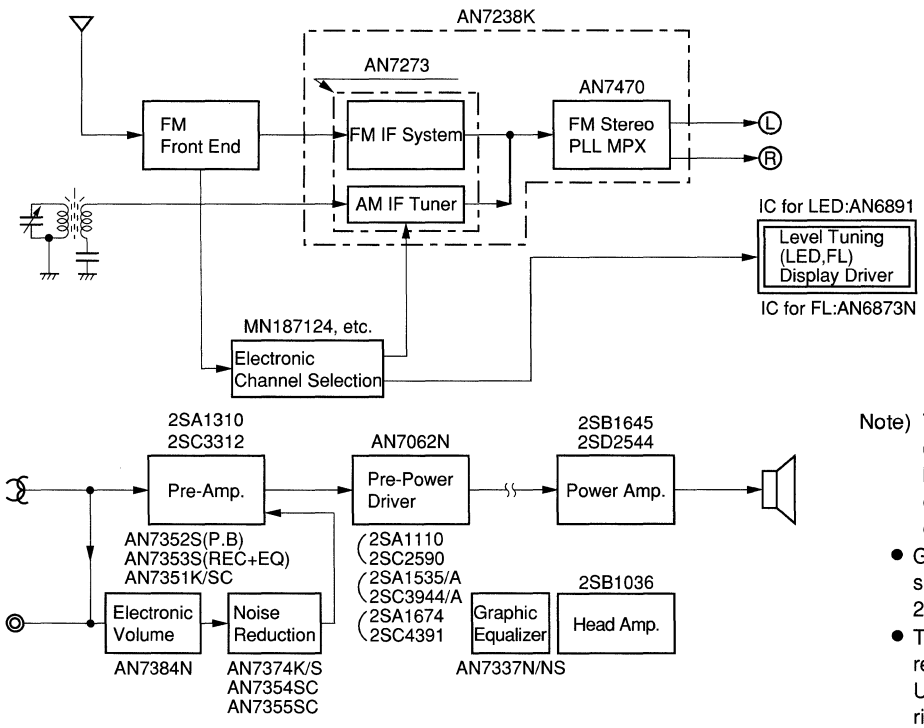

Note) The transistors and diodes listed below can be used for the peripheral circuits in this block diagram.

- General purpose transistor: 2SA1309A, 2SC3311A, etc.
- Transistor with built-in resistors for interface: UN4000/UN2000 Series, etc.
- Switching diode: MA165, MA111 etc.

■ Audio Applications

③ Headphone Stereo/Microcassette/Radio (Headphone Stereo)

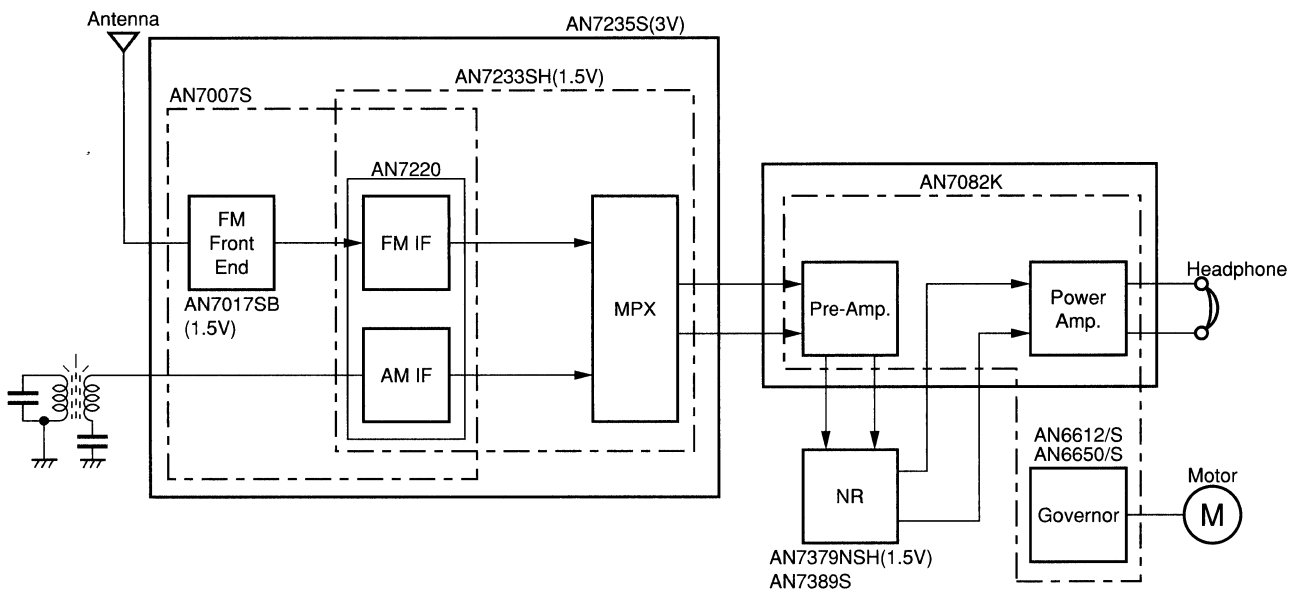

Note) The transistors and diodes listed below can be used for the peripheral circuits in this block diagram.

- General purpose transistor: 2SD2216, 2SB1462, 2SC5016, etc.
- Transistor with built-in resistors for interface: UN9000 Series, etc.
- Switching and Schottky barrier diodes: MA111, MA720, MA729, etc.

④ Radio Cassette Tape Recorder

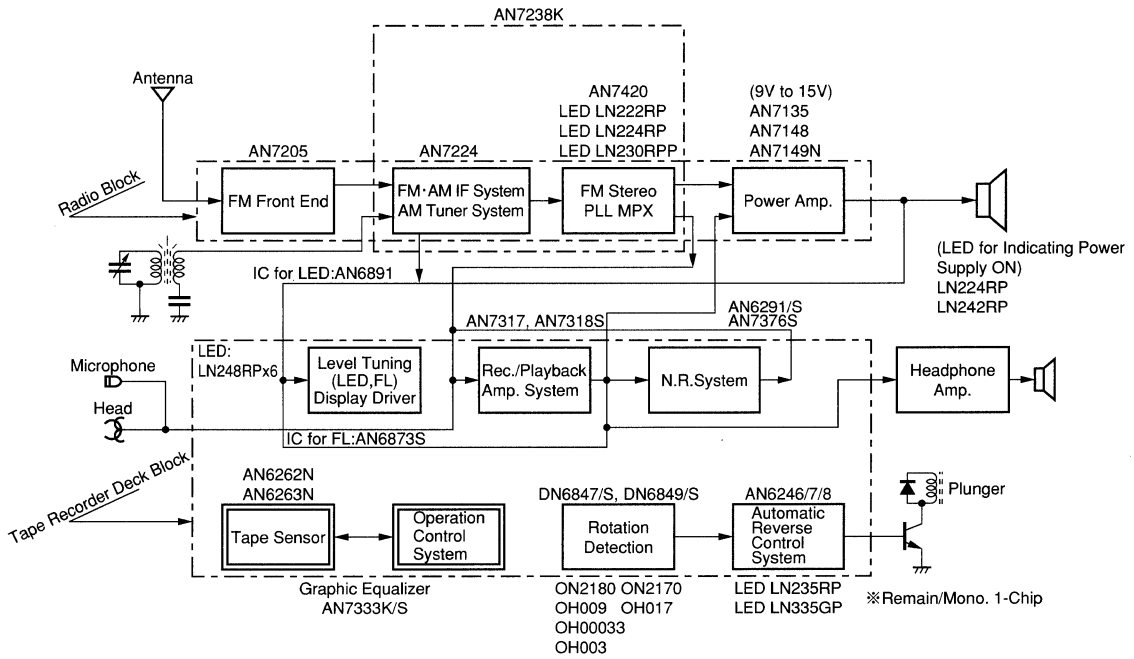

Note) The transistors and diodes listed below can be used for the peripheral circuits in this block diagram.

- General purpose transistor: 2SA1309A, 2SB709A, 2SC3311A, 2SP601A, etc.
- Transistor with built-in resistors for interface: UN4000/UN2000 Series, etc.
- Switching and schottky barrier diodes: MA165, MA111, etc.

Application Block Diagrams

■ Audio Applications

⑤ Car Radio/Car Stereo

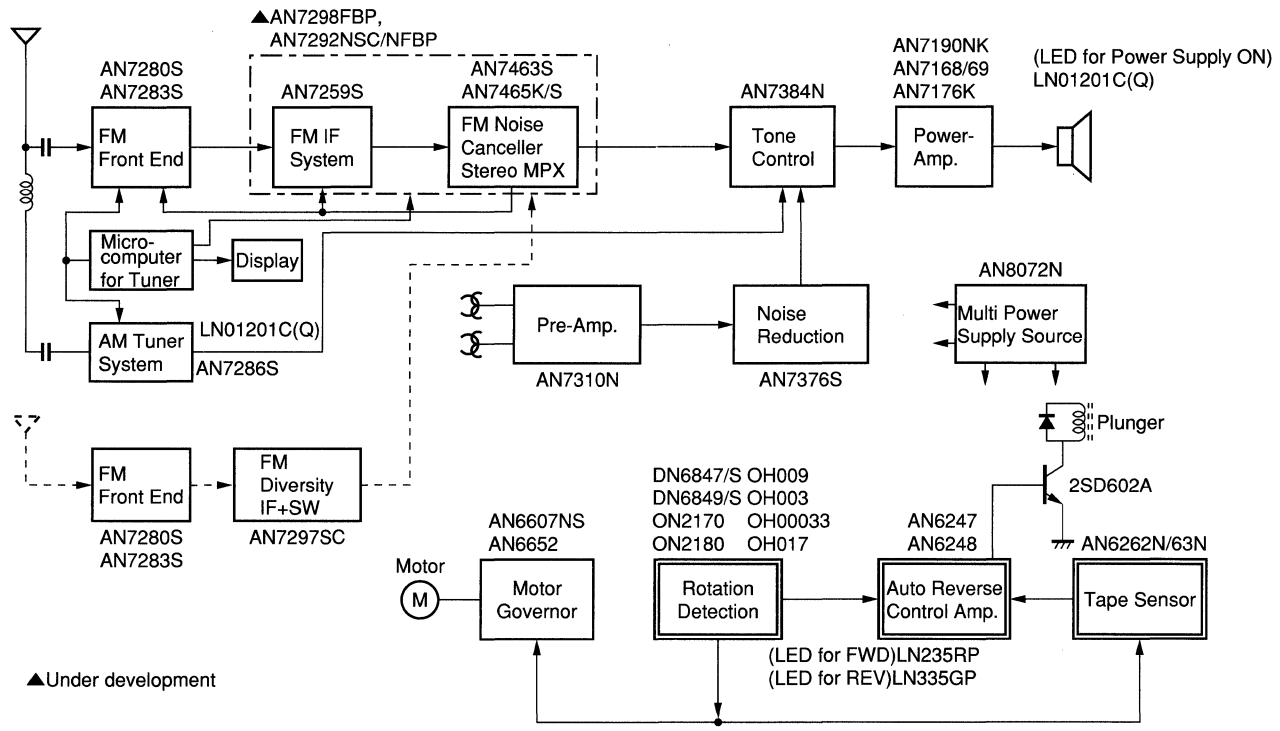

■ Information Equipment

① CD-ROM Drive

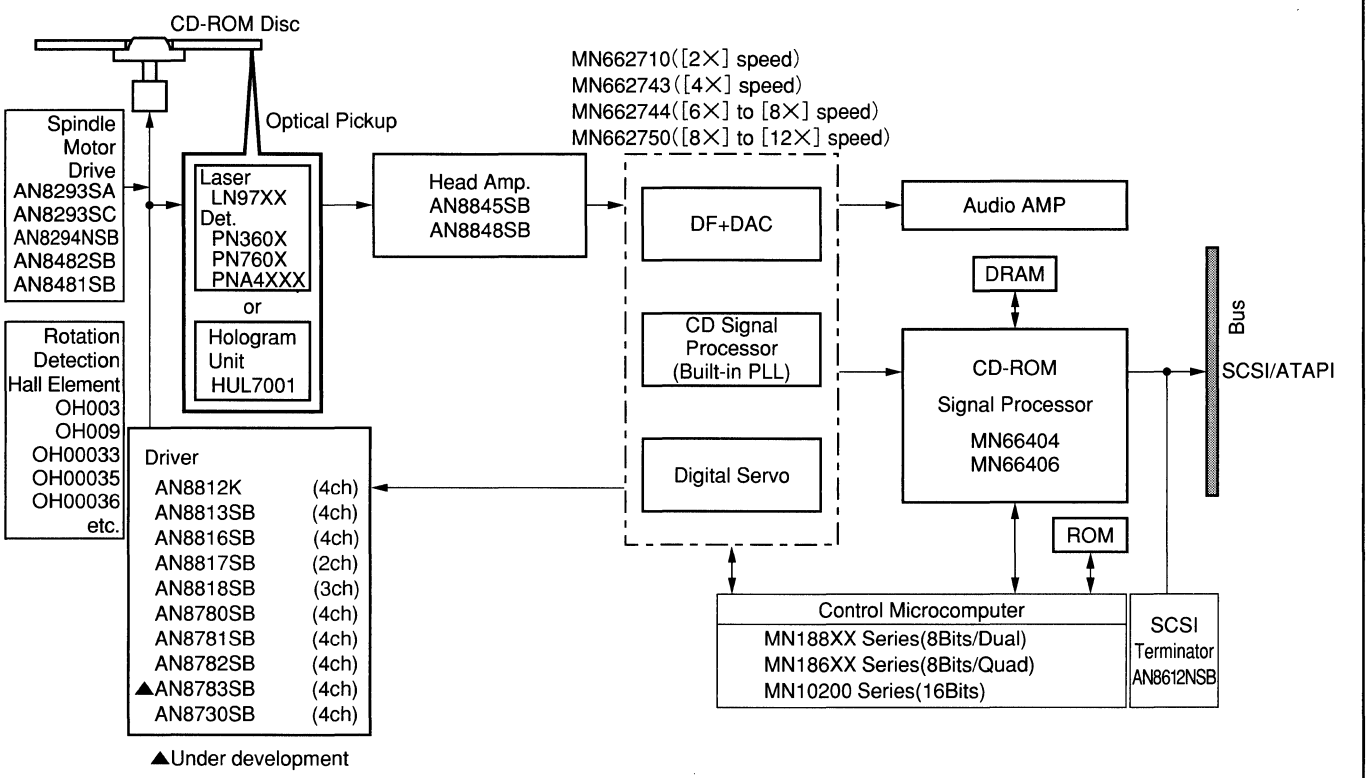

② Floppy Disc Drive

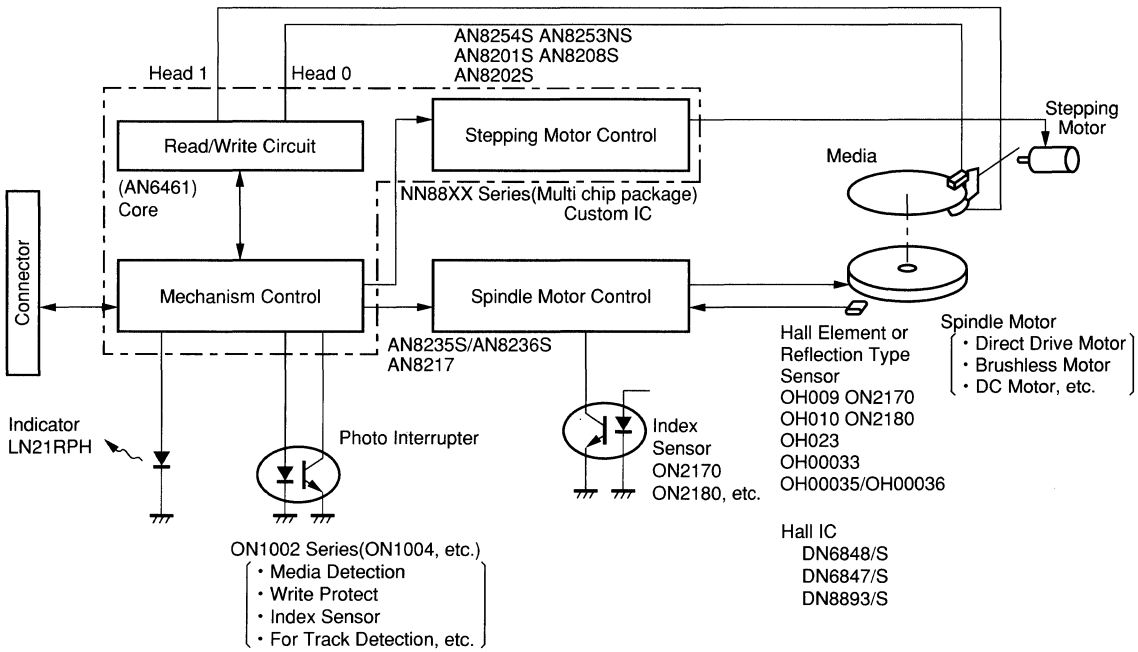

Application Block Diagrams

■ Information Equipment

③ Portable Word Processor

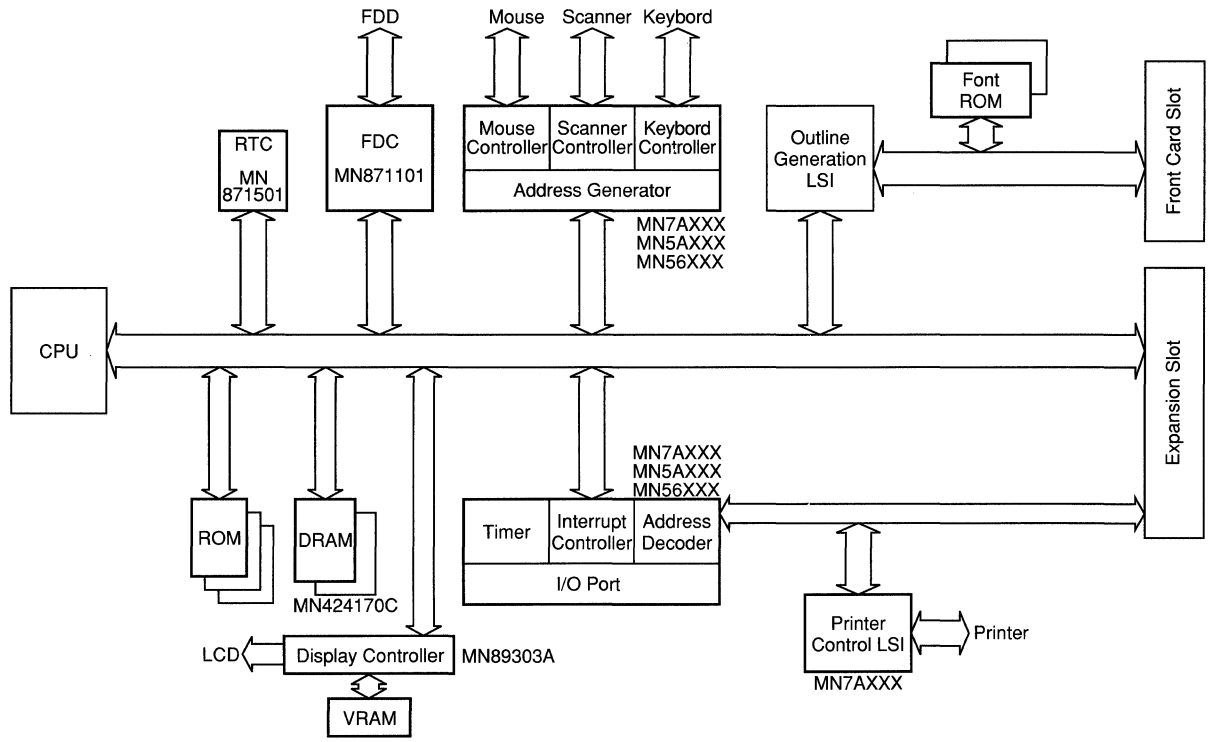

④ Compact System of Personal Computer

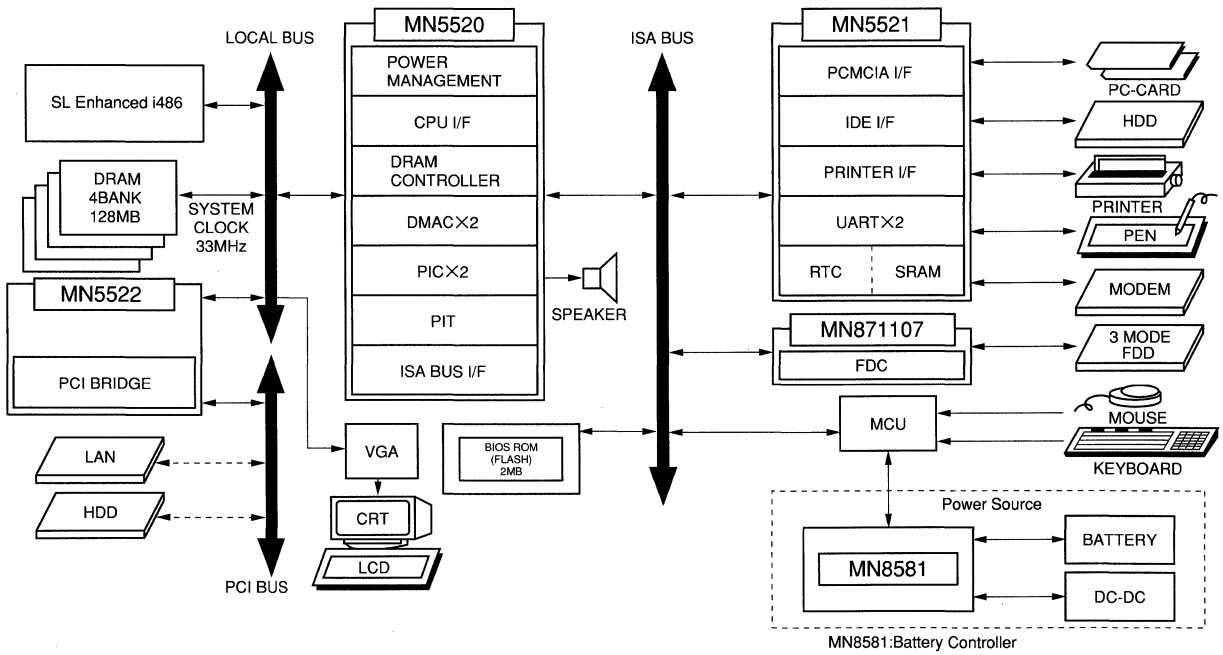

■ Communication Equipment

⑤ Portable Information Equipment

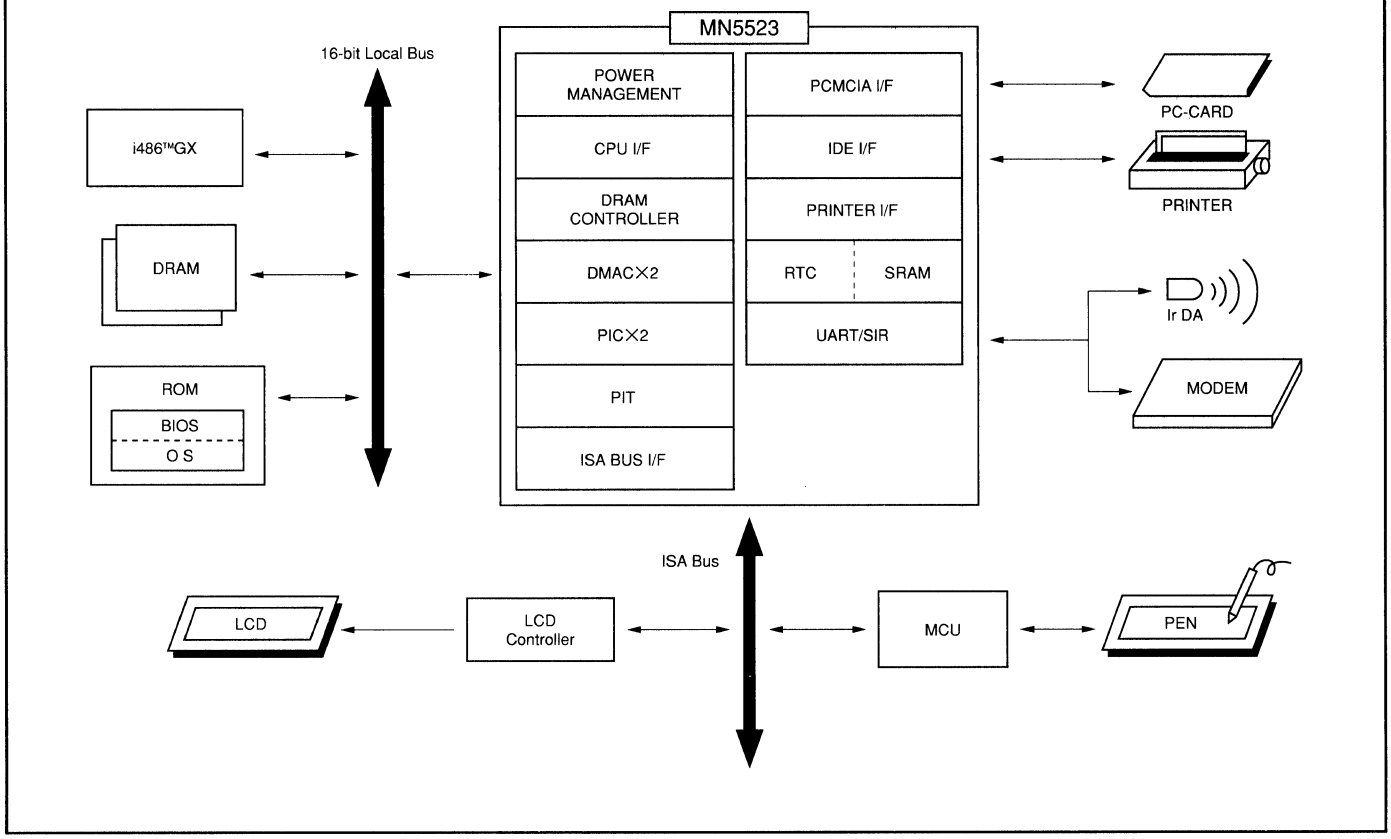

Application Block Diagrams

■ Communication Equipment

① Digital Mobile Telephone (0.9GHz band)

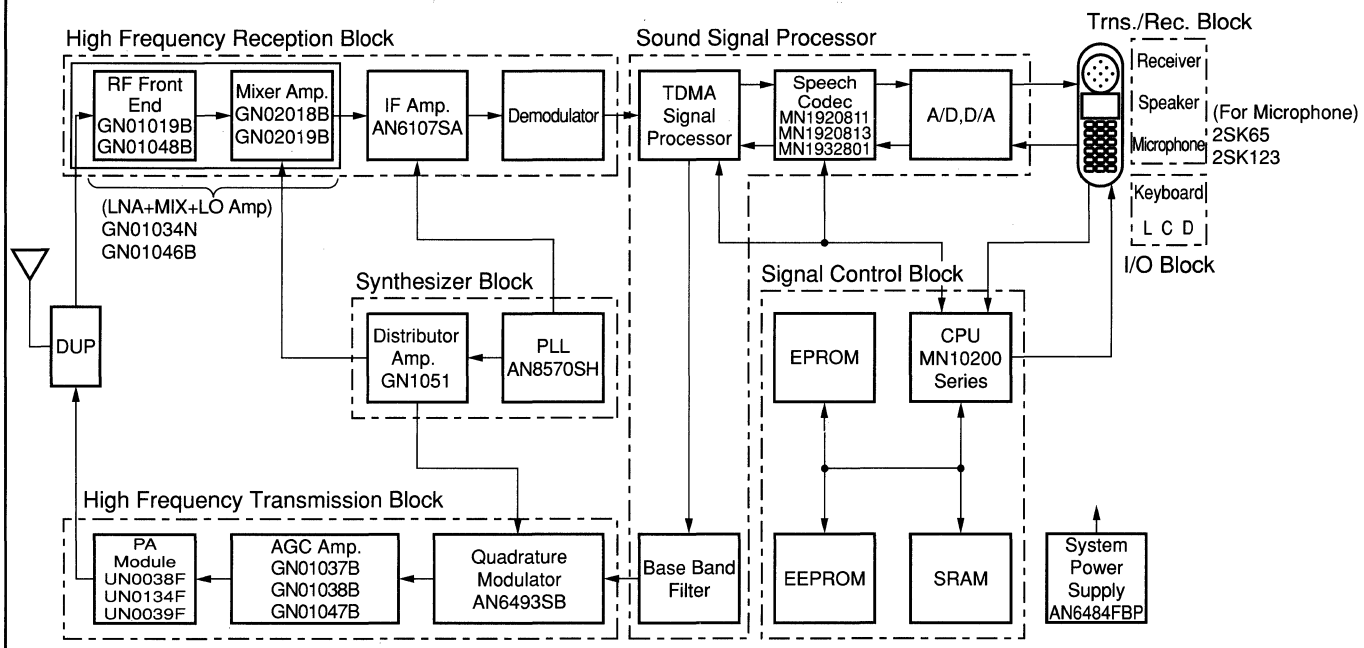

Note) The transistors and diodes listed below can be used for the peripheral circuits in this block diagram.

- Composite transistor: XP Series, Transistor with built-in resistors : UN5000/UN9000 Series
- General purpose transistor: 2SB1462, 2SD2216 etc.
- Schottky barrier/Zener/Switching diode: MA2S728, MA736, MA8000 Series, MA2S111

② Digital Mobile Telephone (1.5GHz band)

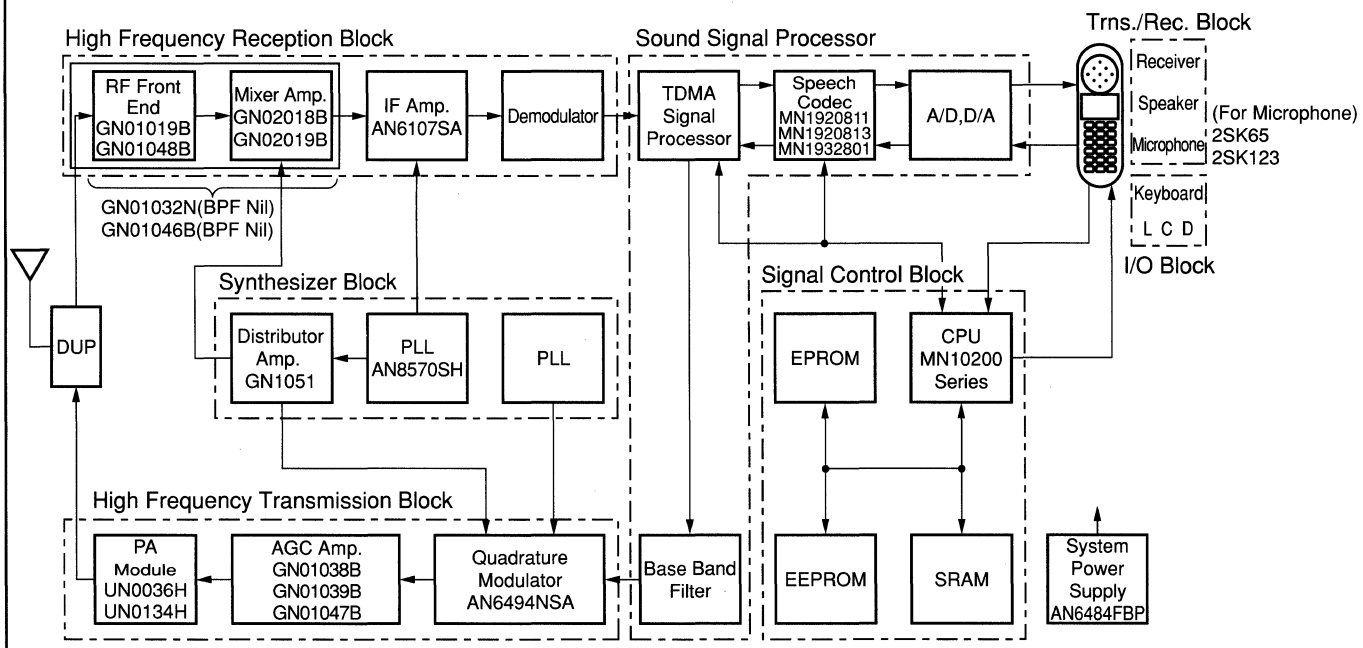

Note) The transistors and diodes listed below can be used for the peripheral circuits in this block diagram.

- Composite transistor: XP Series, Transistor with built-in resistors : UN5000/UN9000 Series
- General purpose transistor: 2SB1462, 2SD2216 etc.
- Schottky barrier/Zener/Switching diode: MA2S728, MA736, MA8000 Series, MA2S111

■ Communication Equipment

③ Digital Cordless Phone (Base set)

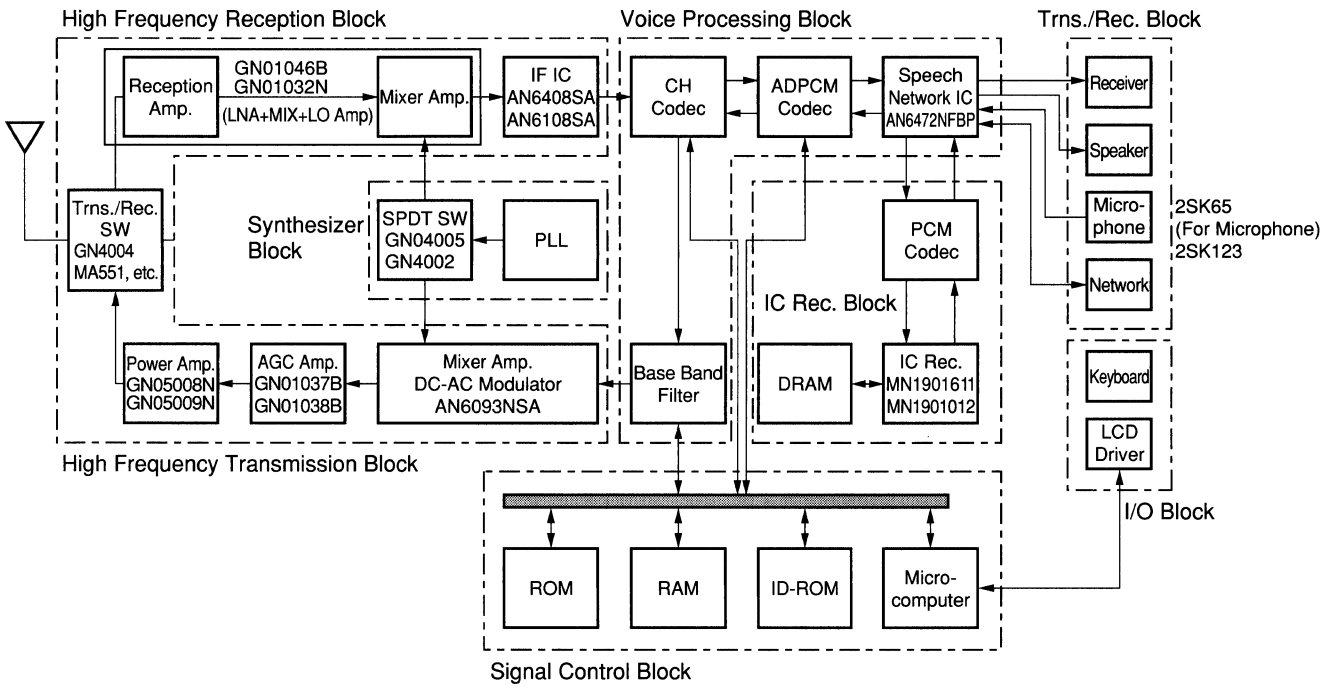

Note) The transistors and diodes listed below can be used for the peripheral circuits in this block diagram.

- General purpose transistor: 2SB1462, 2SD2216 etc.
- Transistor with built-in resistors: UN9000 Series
- Switching/Zener diode: MA2S111, MA8000 Series

④ Digital Cordless Phone (Hand set)

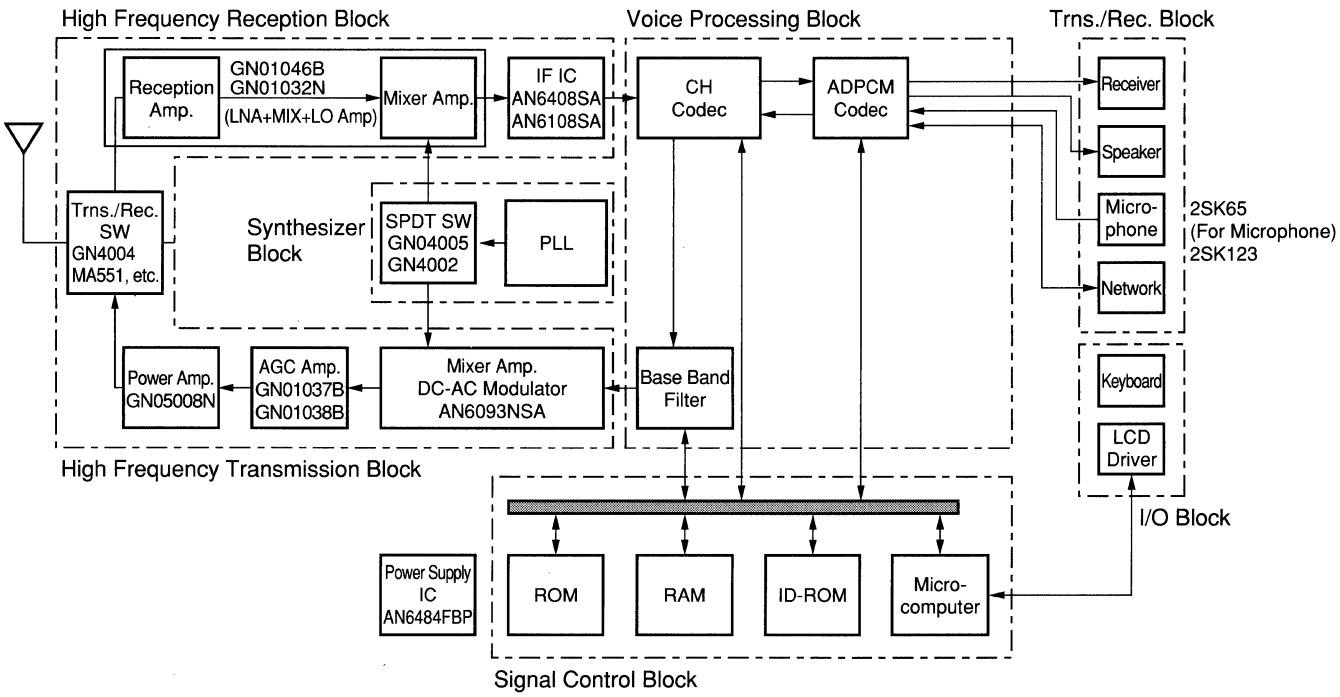

Note) The transistors and diodes listed below can be used for the peripheral circuits in this block diagram.

- General purpose transistor: 2SB1462, 2SD2216 etc.
- Transistor with built-in resistors: UN9000 Series
- Switching/Zener diode: MA2S111, MA8000 Series

Application Block Diagrams

■ Communication Equipment

⑤ Answering Phone・Cordless Phone (Base set)

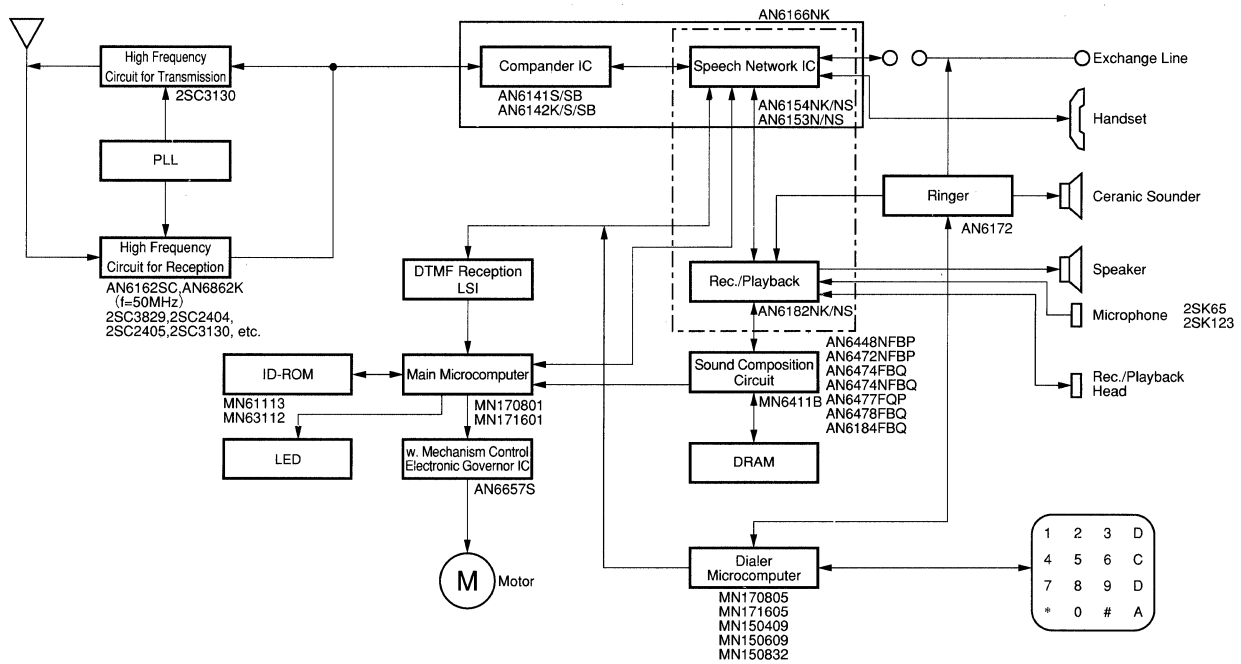

Note) The transistors and diodes listed below can be used for the peripheral circuits in this block diagram.

- General purpose transistor: 2SB1488/2SD662B, etc.
- Zener diode: MA4000 Series
- Transistor with built-in resistors: UN2000T Series

⑥ Answering Phone・Cordless Phone (Hand set)

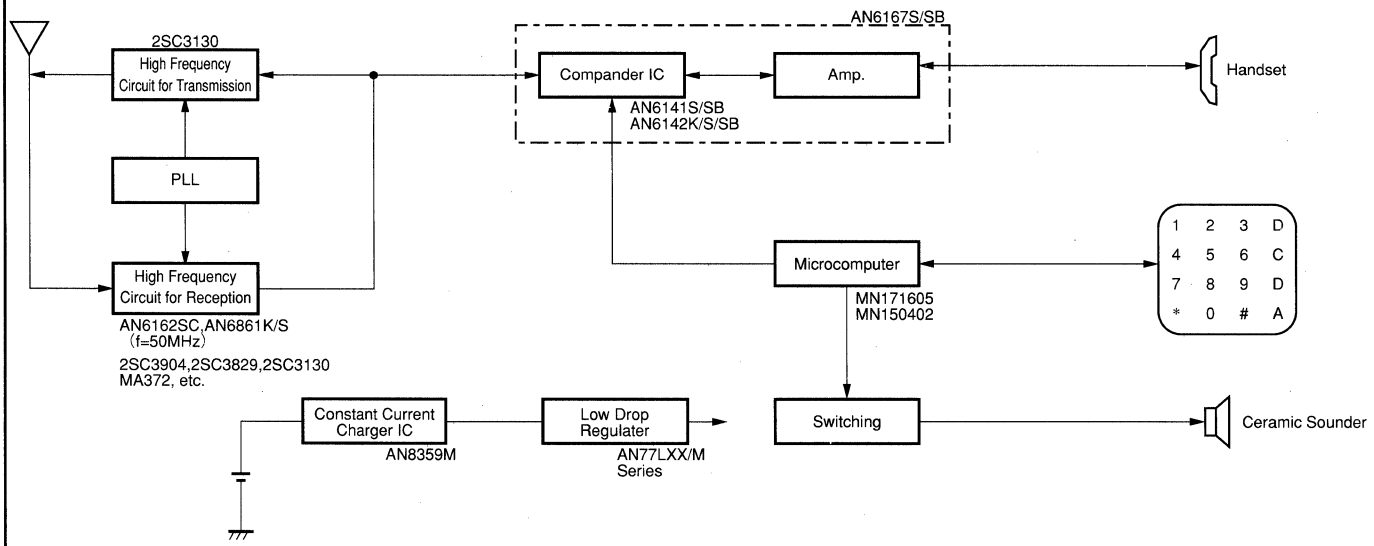

＊ The general-purpose transistor 2SD601A is applicable.

■ Communication Equipment

⑦ Fax

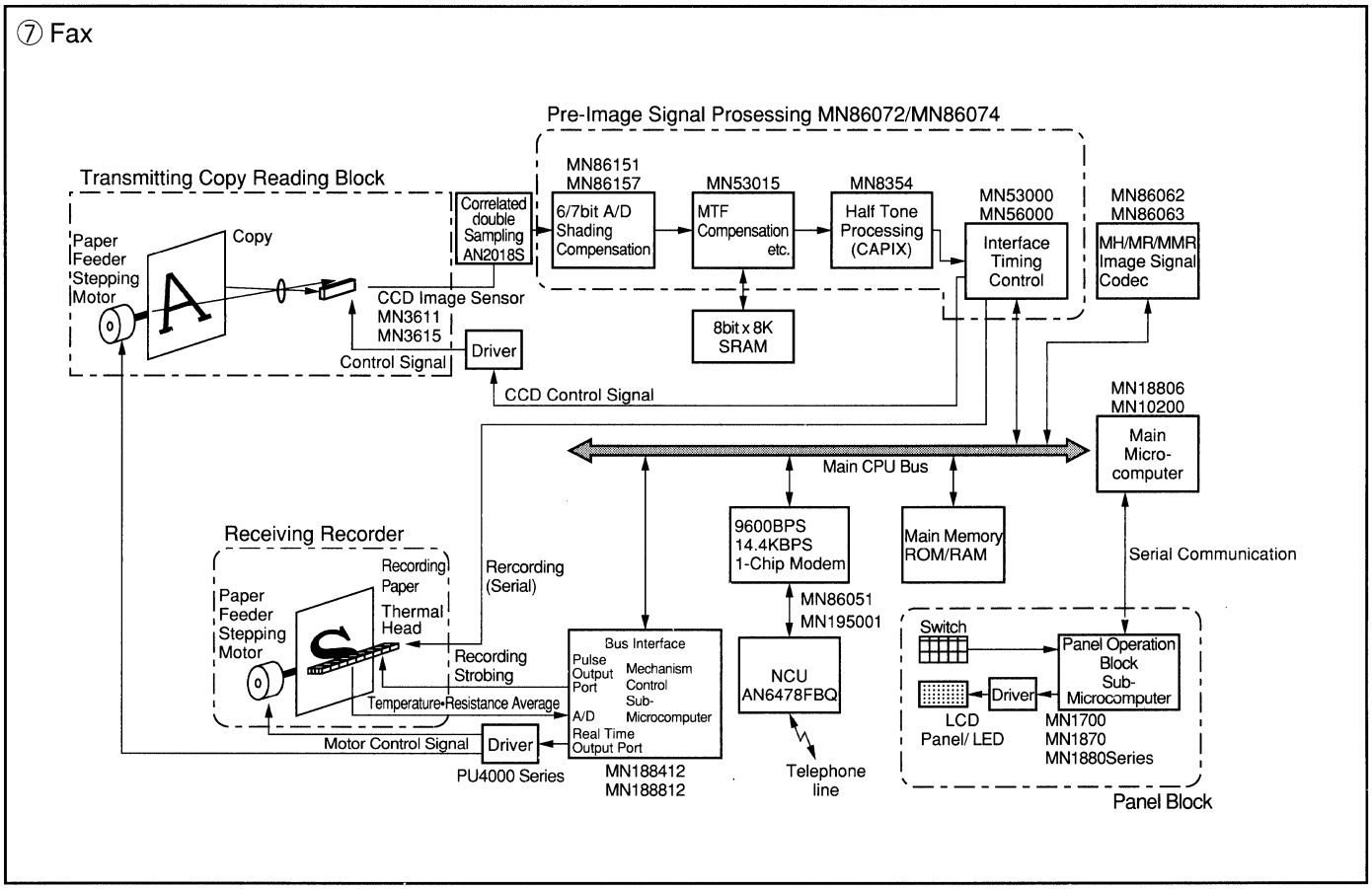

Application Block Diagrams

■ Industrial, Home Applications

① Full-Color TFT-LCD System

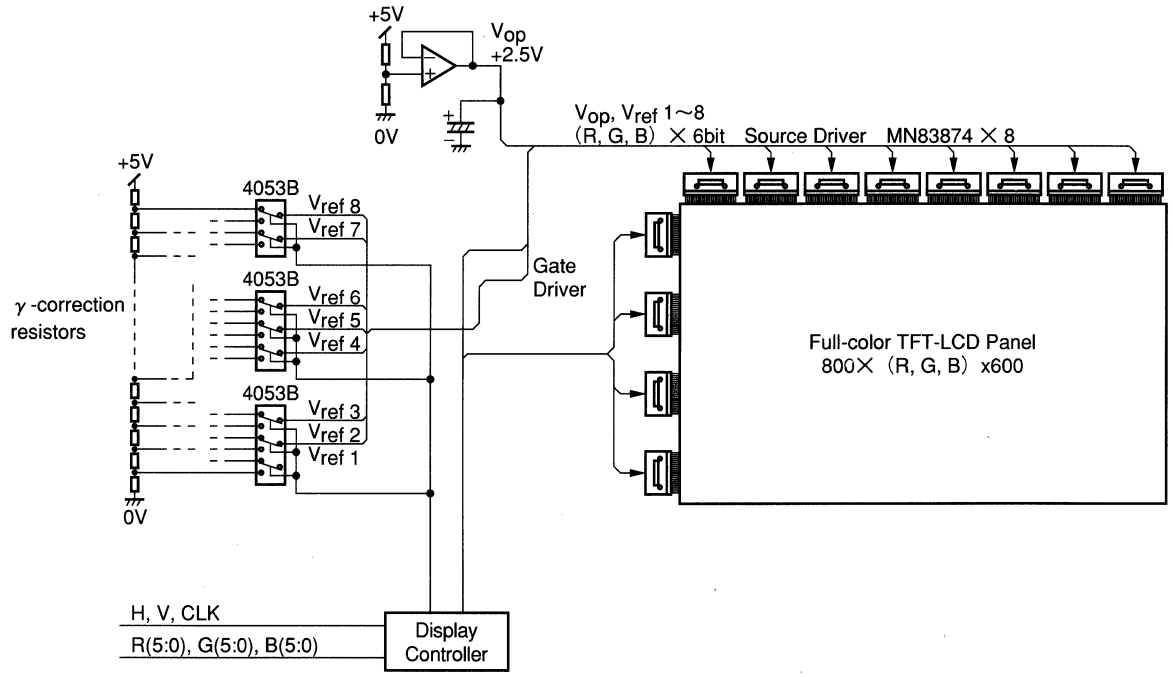

② Switching Power Supply (Single System)

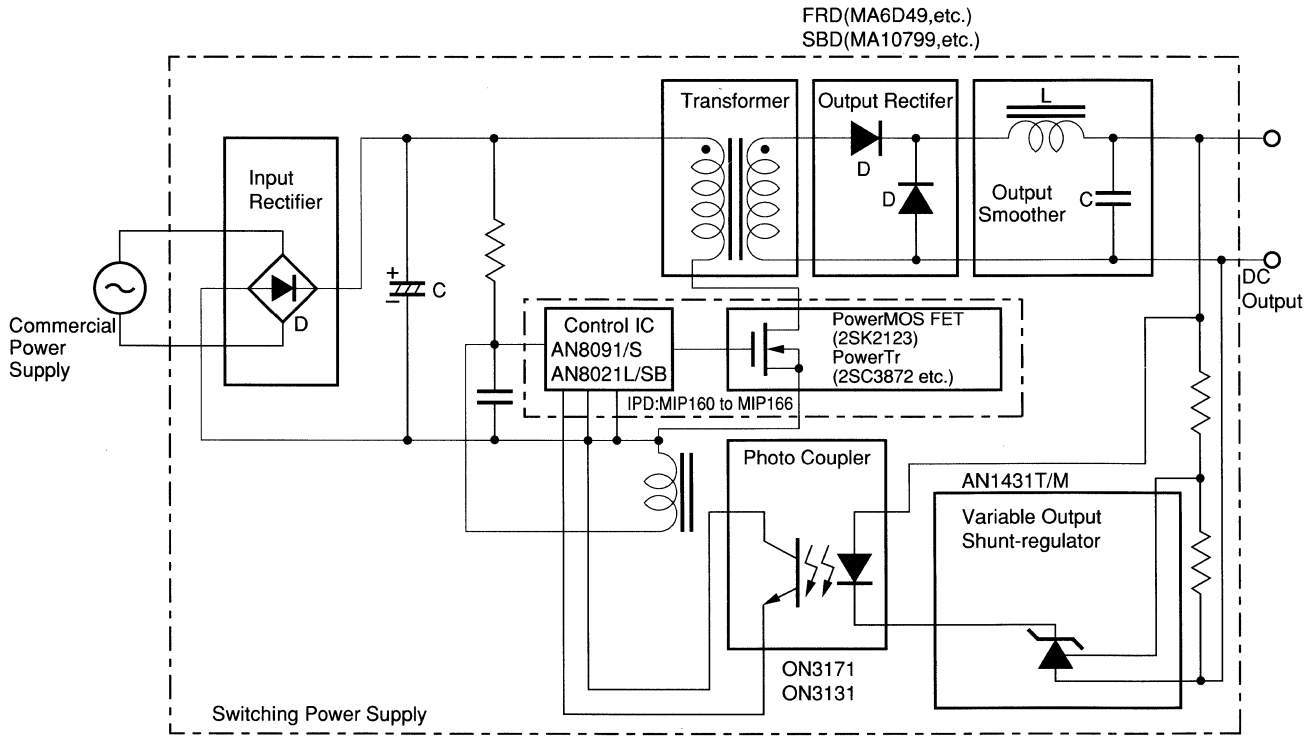

※ For the power supply of 5 to 40W, it is recommended to use the Intelligent Power Devices (IPDs.) MIP160 to MIP166

■ Industrial, Home Applications

③ DC-DC Converter

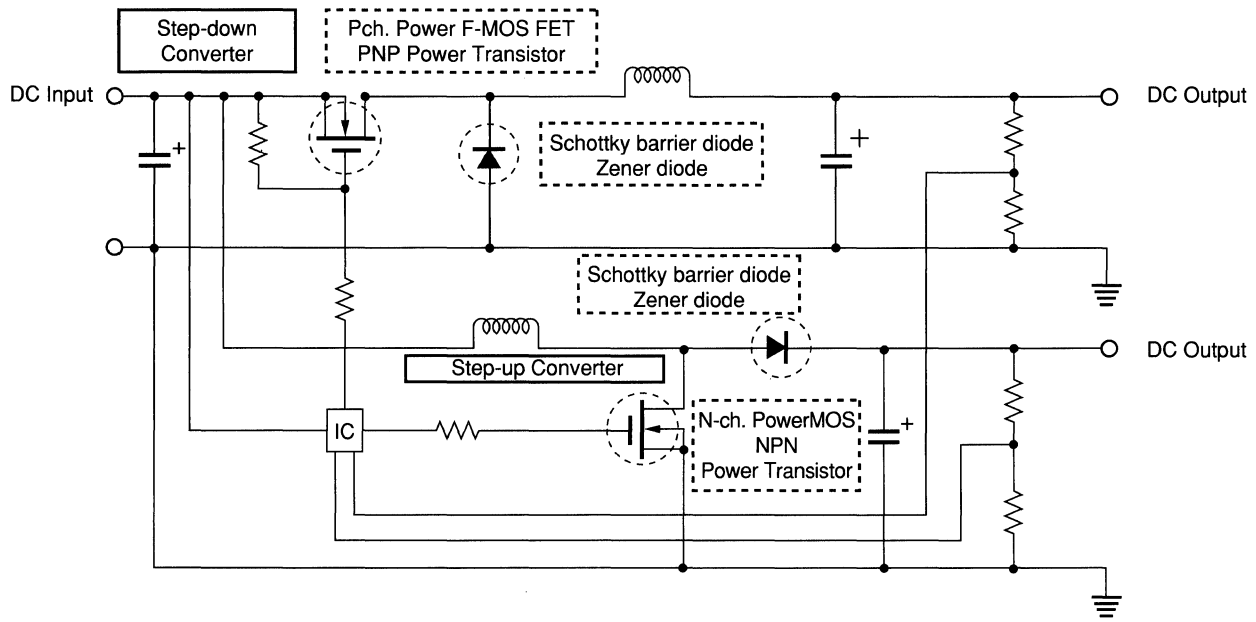

● Recommended Line-ups

Category		Input voltage	V_{DSS}/V_{CEO}	Boost up (inversion*) (N-ch/NPN)	Step down (inversion*) (P-ch/PNP)
Switching element	Power F-MOS FET	DC12V	≦60V	2SK1255, 2SK2578	–
		DC24V	≦100V	2SK1262, 2SK2577	–
		DC48V	≦250V	2SK963, 2SK1035, 2SK1036, 2SK2377 2SK2495	–
	Bipolar power transistor	DC12V	≦60V	2SD2453	–
		DC24V	≦100V	2SD1270, 2SD1271/A, 2SD2183 2SD2468, 2SD2469	2SB945, 2SB946, 2SB1606, 2SB1607 2SB1439
		DC48V	≦250V	2SC5221, 2SC5222	2SA1950, 2SA1951
	Small signal MOS FET	DC12V	≦60V	2SK2211, 2SK2342, 2SK2276, 2SK2277	2SJ0398
		DC48V	≦250V	2SK2474	–
	Bipolar Small signal transistor	DC12V	≦60V	2SD1295, 2SD2185, 2SD2409 2SD2408, 2SD2443	2SB766A, 2SB874A, 2SB968, 2SB1440 2SB1574, 2SB1575
		DC24V	≦100V	2SD875, 2SD2453, 2SC5026, 2SD2556	2SA1890, 2SB767, 2SB789A
	IPD			MIP503/MIP504	
	Shottky barrier diode			MA739, MA3U750, MA3U755, MA3U760	
	Zener diode			MA1000/2000/3000/4000/8000/1Z Series	
IC				AN8011S*, AN8013SH, AN8014S AN8015SH*, AN8016SH	AN8011S*, AN8013SH, AN8014S AN8015SH*

Types with "*"can be used as the control IC for inversion.

Integrated Circuit Selection Guide

Contents

■4-Bit Single Chip Microcomputers, MN1500 Family

Category	Type No.	ROM (K Byte)	RAM (×4-bit)	Input/ Output (Lines)	Speed (μs)	Supply Voltage (typ) (V)	Package	No.	Remarks
General purpose	MN1551A2	1	96	23	1 6	4.5 to 5.5 2.5 to 5.5	SDIP028-P-0400 SOP028-P-0375	L20/L40	LED drive No support tool
	MN150402	4	320	32	1.91 4	2.6 to 5.5 2.2 to 5.5	QFP044-P-1010	L50	OTP available (ES)
	MN150202	2	128	32	1.91 4	2.6 to 5.5 2.2 to 5.5	QFP044-P-1010	L50	OTP available (ES)
	MN150401	4	320	54	1.91 4	2.6 to 5.5 2.2 to 5.5	QFP064-P-1414	L60	OTP available (ES)
	MN150602	6	320	32	1.91 4	2.6 to 5.5 2.2 to 5.5	SDIP042-P-0600	L22	OTP available (ES)
	MN155201	2	128	23	4 1	2.0 to 5.5 4.5 to 5.5	SDIP028-P-0400 SOP028-P-0375 QFH032-P-0707	L20/L40 L44	Without A/D
	▲MN15P0802	8	320	32	1.91	4.5 to 5.5	QFP044-P-1010 SDIP042-P-0600	L50/L22	One time version (ES)
	MN155202	2	128	21	4 1	2.0 to 5.5 4.5 to 5.5	SDIP028-P-0400 SOP028-P-0375	L20/L40	10-bit A/D input
	MN155402	4	192	21	4 1	2.0 to 5.5 4.5 to 5.5	SDIP028-P-0400 SOP028-P-0375 QFH032-P-0707	L20/L40 L44	10-bit A/D input
	MN15P5402	4	256	23	1 to 4	4.5 to 5.5	SOP028-P-0375 SDIP028-P-0400	L40/L20	One time version
	MN150837	8	512	33	0.95 1.91 122	2.7 to 5.5 1.8 to 5.5	QFP044-P-1010	L50	Without A/D
	MN151233	12	512	54	0.95 1.91 122	2.7 to 5.5 1.8 to 5.5	QFP064-P-1414	L60	Without A/D
Analog input comparator & A/D converter	▲MN151630	16	512	54	1.00 1.91 8 15.28	4.5 to 5.5 2.6 to 5.5 2.2 to 5.5 2.2 to 5.5	QFP084-P-1818E	L73	10-bit A/D input LCD driver
	▲MN150831	8	512	33	1 2	4.5 to 5.5 1.8 to 5.5	QFP044-P-1010	L50	10-bit A/D
	▲MN150222	2	96	15 (16)*	1 4 8	4.5 to 5.5 2.0 to 5.5 1.8 to 5.5	SOP020-P-0300 SDIP022-P-0300	L35 L19	10-bit A/D *During selection of CR
	▲MN150120	1	64	15 (16)*	1 4 8	4.5 to 5.5 2.0 to 5.5 1.8 to 5.5	SOP020-P-0300 SDIP022-P-0300	L35 L19	Comparators *During selection of CR
LCD driver	MN150413	4	256	26	0.94 1.818	2.7 to 5.5 1.8 to 5.5	QFP064-P-1414	L60	Remote control output
	MN150813	8	432	26	0.94 1.818	2.7 to 5.5 1.8 to 5.5	QFP064-P-1414	L60	Remote control output
	MN158851A	8	432	32	1 8	4.5 to 5.5 2.5 to 5.5	QFP084-P-1818	L72	
	MN150810	8	512	40	0.95 1.91 122	4.5 to 5.5 2.6 to 5.5 2.2 to 5.5	QFP064-P-1414	L60	
LED driver	MN1551A2	1	96	23	1 6	4.5 to 5.5 2.5 to 5.5	SDIP028-P-0400 SOP028-P-0375	L20/L40	No support tool
Remote control	MN150414	4	256	22	2	1.8 to 3.6	SOP028-P-0375	L40	Ordinary port
	MN150814	8	320	22	2	1.8 to 3.6	SOP028-P-0375	L40	Ordinary port
	MN151614	8 (Table 8K)	320	22	2	1.8 to 3.6	SOP028-P-0375	L40	Ordinary port
	MN150413	4	256	26	0.94 1.818	2.7 to 5.5 1.8 to 5.5	QFP064-P-1414	L60	LCD driver
	MN150813	8	432	26	0.94 1.818	2.7 to 5.5 1.8 to 5.5	QFP064-P-1414	L60	LCD driver
Telephone	MN150409	4	256	33	1.1 2.2 17.6	4.5 to 5.5 3.0 to 5.5 2.2 to 5.5	SDIP042-P-0600 QFP044-P-1010	L22/L50	OTP available (ES)
	MN150609	6	512	33	1.1 2.2 17.6	4.5 to 5.5 3.0 to 5.5 2.2 to 5.5	SDIP042-P-0600 QFP044-P-1010	L22/L50	OTP available (ES)
	MN150832	8	512	55	1.1 2.2 17.6	4.5 to 5.5 3.0 to 5.5 2.2 to 5.5	QFP064-P-1414	L60	OTP available (ES)
Channel selection	MN152810	8	320	20	2	4.5 to 5.5	SDIP052-P-0600	L23	
	MN152811	8	256	17	2	4.5 to 5.5	SDIP042-P-0600	L22	
Home appliances Note)	MN150404	4	256	32	1.91 4	2.6 to 5.5 2.2 to 5.5	QFP064-P-1414	L60	LCD driver OTP available
	MN150804	8	384	32	1.91 4	2.6 to 5.5 2.2 to 5.5	QFP064-P-1414	L60	LCD driver OTP available

▲Under development

Note) Compared to usual microcomputers, microcomputers for the electrical home appliances are prevented from wrong operation by external noises, because reset pin, interrupt input pin and oscillator input pin have enhanced-anti-noise characteristics and their pin assignments are in consideration for noises.

Microcomputers

■ 4-Bit Single Chip Microcomputers, MN1700 Family

Category	Type No.	ROM (×10-bit)	RAM * (×4-bit)	Input/ Output (Lines)	Speed (μs)	Supply Voltage (typ) (V)	Package	No.	Remarks
General purpose	MN170401	4K	256 + (S96)	57	0.5 91.6	4.5 to 5.5 2.7 to 5.5	SDIP064-P-0750 QFP064-P-1818	L24/L58	
	MN170801	8K	512 + (S96)						
	MN171601[(A) Revised version]	16K	896 + (S96)				SDIP064-P-0750 QFP064-P-1818	L24/L58	
	MN17P1601	16K	896 + (S96)		0.5 91.6	4.5 to 5.5	SDIP064-P-0750 QFI064-P-0530 QFP064-P-1818	L24/L57, L58	One time version
FLP driver	MN171202	12K	896 + (S96)	24 + 32 (FL use as well)	0.5 91.6	4.5 to 5.5 2.7 to 5.5	SDIP064-P-0750	L24	
	MN171602	16K	896 + (S96)						
	MN17P1602	16K	896 + (S96)		0.5 91.6	4.5 to 5.5	SDIP064-P-0750	L24	One time version
A/D input LCD driver	MN170803[(A) Revised version]	8K	512 + (S96)	52	0.5 91.6	4.5 to 5.5 2.2 to 5.5	QFP084-P-1818	L72	
	MN171603	16K	896 + (S96)						
	MN17P1603	16K	896 + (S96)		0.5 91.6	4.5 to 5.5			One time version
LCD driver	MN171608	16K	896 + (S96)	34	0.5 91.6	4.5 to 5.5 2.7 to 5.5	QFP064-P-1414	L60	
	MN171609	16K + Table ROM 4K	896 + stack 96	52	2.27 91.6	2.0 to 3.6 2.0 to 3.6	QFP084-P-1818	L72	Remote control
	MN17P1608	16K	896 + (S96)	34	0.5 91.6	4.5 to 5.5 2.7 to 5.5	QFP064-P-1414	L60	One time version
A/D input	MN170804	8K	512 + (S96)	55	0.5 91.6	4.5 to 5.5 2.7 to 5.5	SDIP064-P-0750 QFH064-P-1212 QFP064-P-1818	L24/L55, L58	
	MN171604	16K	896 + (S96)				SDIP064-P-0750 QFH064-P-1212	L24/L55	
	MN17P1604	16K	896 + (S96)		0.5	4.5 to 5.5	SDIP064-P-0750 QFH064-P-1212 QFP064-P-1818	L24/L55, L58	One time version
DTMF built-in	MN170805	8K	1536 + (S96)	73	0.84 1.68 91.6	3.6 to 5.5 2.5 to 5.5 2.5 to 5.5	QFP084-P-1818	L72	A/D input DTMF
	MN171605	16K	1920 + (S96)						
	MN17P1605	16K	1920 + (S96)		0.84 1.68 91.6	4.5 to 5.5	QFP084-P-1818	L72	One time version
FLP driver	MN172412	16K + 8K (Table)	896 + (S96)	28 + 48 (FL use as well)	0.5 91.6	4.5 to 5.5 2.7 to 5.5	QFP084-P-1818	L72	
	MN17P3212	16K + 16K (Table)	896 + (S96)		0.5 91.6	4.5 to 5.5			One time version
	MN173222	32K	1408 + (S128)	28 + 48	0.35 91.6	4.5 to 5.5 2.7 to 5.5	QFP084-P-1818	L72	
	▲MN17P3222	32K				4.5 to 5.5			One time version

*S: Resistor stack

■ 8-Bit Single Chip Microcomputer, MN1870 Family

Category	Type No.	ROM (K Byte)	RAM (×8-bit)	Input/ Output (Lines)	Speed (μs)	Supply Voltage (typ) (V)	Package	No.	Remarks
Remote control (transmission/reception)	MN187818	8	1536	59	1 122	3.3 to 5.5 2.2 to 5.5	QFP064-P-1414	L60	
	MN1871618	16	768	59	1 122	3.3 to 5.5 2.2 to 5.5	QFP064-P-1414	L60	
A/D input FLP driver Remote control (transmission/reception)	MN1872423	24	512	73	0.477 122	4.3 to 5.5 2.2 to 5.5	QFP084-P-1818E	L73	
	MN1873223	32	1024	73	0.477 122	4.3 to 5.5 2.2 to 5.5	QFP084-P-1818E	L73	
	MN1874023	40	1024	73	0.477 122	4.3 to 5.5 2.2 to 5.5	QFP084-P-1818E	L73	
	MN1874823	48	1024	73	0.477 122	4.3 to 5.5 2.2 to 5.5	QFP084-P-1818E	L73	
	▲MN18P76423	64	2048	73	0.475 122	4.5 to 5.5 3.5 to 5.5	QFP084-P-1818E	L73	One time version

▲Under development

(Package Symbol) QFH = Quad Flat High Package, QFI = Quad Flat I-leaded Package, QFP = Quad Flat Package, SDIP = Shrunk Dual-In-line Package

■ 8-Bit Single Chip Microcomputers, MN1870 Family (continued)

Category	Type No.	ROM (K Byte)	RAM (×8-bit)	Input/ Output (Lines)	Speed (μs)	Supply Voltage (typ) (V)	Package	No.	Remarks
A/D input LCD driver Remote control (transmission/ reception)	MN1871215	12	384	56	0.477 122	4.5 to 5.5 2.7 to 5.5	QFP084-P-1818	L72	
	MN1871610	16	1024	56	0.475 122	4.5 to 5.5 2.7 to 5.5	QFP100-P-1818	L76	
	MN1872410	24	1536	56	0.667 122	4.5 to 5.5 2.7 to 5.5	QFP100-P-1818	L76	
	MN1873210	32	1536	56	0.667 122	4.5 to 5.5 2.7 to 5.5	QFP100-P-1818	L76	
	▲MN18P73210	32	2048	56	0.667 122	4.5 to 5.5 3.5 to 5.5	QFP100-P-1818	L76	One time version
FLP driver Remote control (Reception)	MN187124	12	384	54	0.477 122	4.5 to 5.5 2.7 to 5.5	SDIP064-P-0750 QFP064-P-1818	L24/L58	
	MN187164	16	512	54	0.477 122	4.5 to 5.5 2.7 to 5.5	SDIP064-P-0750 QFP064-P-1818	L24/L58	
	MN187204	20	640	54	0.477 122	4.5 to 5.5 2.7 to 5.5	SDIP064-P-0750 QFP064-P-1818	L24/L58	
	MN187244	24	768	54	0.477 122	4.5 to 5.5 2.7 to 5.5	SDIP064-P-0750 QFP064-P-1818	L24/L58	
	MN187324	32	960	54	0.477 122	4.5 to 5.5 2.7 to 5.5	SDIP064-P-0750 QFP064-P-1818	L24/L58	
	MN18P7324	32	1024	54	0.475 122	4.5 to 5.5 3.5 to 5.5	SDIP064-P-0750 QFP064-P-1818	L24/L58	One time version
	MN1872457	24	768	57	0.477 122	3.5 to 5.5 2.7 to 5.5	QFH064-P-1414B	L56	
	MN18P73257	32	1024	57	0.477 122	3.5 to 5.5 2.7 to 5.5	QFH064-P-1414B	L56	One time version
Tuning OSD	MN1871631	16	320	30	0.667	4.5 to 5.5	SDIP064-P-0750	L24	12×18 dots, 128 kinds 23×14 lines
	MN1872432	24	640	30	0.667	4.5 to 5.5	SDIP064-P-0750 QFH080-P-1420	L24/L65	12×18 dots, 256 kinds 23× 14 lines
	MN1874033	40	640	30	0.667	4.5 to 5.5	SDIP064-P-0750	L24	12×18 dots, 256 kinds 32×14 lines
Caption OSD	MN1871675	16	320	29	0.5	4.5 to 5.5	SDIP064-P-0750	L24	12×18 dots, 144 kinds 34×8 lines
	MN1873265	32	480	29	0.5	4.5 to 5.5	SDIP064-P-0750	L24	12×18 dots, 176 kinds 34×9 lines
	MN1874876	48	928	46	0.5	4.5 to 5.5	SDIP064-P-0750	L24	12×18 dots, 432 kinds 34×16 lines
	MN1876476	64	928	46	0.5	4.5 to 5.5	SDIP064-P-0750	L24	12×18 dots, 688 kinds 34×16 lines
	MN18P76476	64	928	46	0.5	4.5 to 5.5	SDIP064-P-0750	L24	12×18 dots, 688 kinds 34×16 lines

■ 8-Bit Single Chip Microcomputers, MN1880 Family

Category	Type No.	ROM (K Byte)	RAM (×8-bit)	Input/ Output (Lines)	Speed (μs)	Supply Voltage (typ) (V)	Package	No.	Remarks
General purpose	MN188161	16	640	56	0.5 122	4.5 to 5.5 3.0 to 5.5	SDIP064-P-0750 QFP064-P-1818 QFP064-P-1414	L24 L58/L60	
	MN188321	32	448	56	0.5 122	4.5 to 5.5 3.0 to 5.5	SDIP064-P-0750 QFP064-P-1818 QFP064-P-1414	L24 L58/L60	
	MN18P8321	32	960	56	0.5 122	4.5 to 5.5	SDIP064-P-0750 QFP064-P-1818 QFP064-P-1414	L24 L58/L60	One time version
A/D Input	MN18P888	8	256	45	0.5	4.5 to 5.5	QFH064-P-1212	L55	One time version
A/D input Timer upgraded	MN1882417	24	800	66	0.5 122	4.5 to 5.5 3.5 to 5.5	QFH080-P-1414	L64	A/D input
	MN18P83217	32	928	67	0.5 122	4.5 to 5.5 3.5 to 5.5	QFH080-P-1414	L64	One time version
	MN188166	16	384	69/66	0.5 122	4.5 to 5.5 3.0 to 5.5	QFP084-P-1818 QFH080-P-1414	L72/L64	A/D input
	MN18P8326	32	656	69	0.5	4.5 to 5.5	QFP084-P-1818	L72	One time version
	MN1882010	20	512	66	0.5 122	3.3 to 3.6 3.0 to 3.6	QFH080-P-1212	L63	A/D input

(Package Symbol) QFH = Quad Flat High Package, QFP = Quad Flat Package, SDIP = Shrunk Dual-In-line Package

■8-Bit Single Chip Microcomputers, MN1880 Family (continued)

Category	Type No.	ROM (K Byte)	RAM (×8-bit)	Input/ Output (Lines)	Speed (μs)	Supply Voltage (typ) (V)	Package	No.	Remarks
A/D input Timer upgraded	▲MN18P82410(A)	24	580	65	0.5	4.5 to 5.5	QFH080-P-1212	L63	One time version
	MN1883210 [5V version]	32	528	69	0.5 122	4.5 to 5.5 3.0 to 5.5	QFP084-P-1818	L72	A/D input
	MN1883210 [(A)3.3V version]	32	688	69	0.5 122	3.3 to 5.5 3.0 to 5.5	QFH084-P-1414	—	
	MN18P83210	32	656	69	0.5 122	4.5 to 5.5	QFP084-P-1818	L72	One time version
	MN1882414	24	448	70	0.5 122	4.5 to 5.5 3.0 to 5.5	QFP084-P-1818	L72	A/D input
	MN1883214	32	928	70	0.5 122	4.5 to 5.5 3.0 to 5.5	QFP084-P-1818	L72	A/D input
	MN1883220	32	2592	67	0.5 122	4.5 to 5.5 3.0 to 5.5	QFH080-P-1414	L64	A/D input
	MN1884820	48	2720	67	0.5 122	4.5 to 5.5 3.0 to 5.5	QFH080-P-1414	L64	A/D input
	MN18P83220	32	2592	67	0.5 122	4.5 to 5.5 3.0 to 5.5	QFH080-P-1414	L64	One time version
	▲MN18P83214	32	928	71	0.5 122	4.5 to 5.5	QFP084-P-1818	L72	One time version
	MN1882421	24	800	72	0.33 122	2.7 to 4.0	QFH080-P-1212	L63	A/D input
	▲MN18P83221	32	928	66	0.4	2.7 to 5.5	QFH080-P-1212	L63	One time version
A/D input Timer upgraded High-speed bus expanded	MN1880023	64KB ext.	704	73	0.2	4.5 to 5.5	QFP084-P-1818E	L73	A/D input
	MN1880024	64KB ext.	928	73	0.2	4.5 to 5.5	QFP064-P-1818E	L73	A/D input
	▲MN1884824	48	928	73	0.2	4.5 to 5.5	QFP084-P-1818E	L73	A/D input
	▲MN18P86424	64	928	73	0.2	4.5 to 5.5	QFP084-P-1818E	L73	One time version
Memory space expanded	MN18806	2MB ext.	2MB ext.	63	0.5 0.4	4.5 to 5.5 4.75 to 5.5	QFP100-P-1818	L76	
	MN18P86420	64	2720	67	0.5 122	4.5 to 5.5 3.0 to 5.5	QFH080-P-1414	L64	One time version

▲Under development

■8-Bit Single Chip Microcomputers, MN1860 Family

Category	Type No.	ROM (K Byte)	RAM (×8-bit)	Input/ Output (Lines)	Speed (μs)	Supply Voltage (V)	Package	No.	Remarks
A/D	MN1860003	Ext.	1088	85	0.20 122	4.5 to 5.5 4.5 to 5.5	QFP100-P-1818	L76	
A/D High -speed bus expanded	MN1860004	Ext.	1088	85	0.16 122	4.5 to 5.5 4.5 to 5.5	QFH100-P-1414	L75	
	MN1866405	64	1856	85	0.20 122	3.0 to 5.5 3.0 to 5.5	QFH100-P-1414	L75	
	MN1866406	64	1856	85	0.16 0.25	4.5 to 5.5 3.0 to 5.5	QFH100-P-1414 QFP100-P-1818	L75 L76	
	MN18P66405	64	1856	85	0.25 122	3.3 to 5.5 3.3 to 5.5	QFH100-P-1414 QFP100-P-1818	L75 L76	

■8-Bit Single Chip Microcomputers, MN10100 Family

Category	Type No.	ROM (K Byte)	RAM (×8-bit)	Input/ Output (Lines)	Speed (μs)	Supply Voltage (V)	Package	No.	Remarks
A/D	▲ MN101C01D	64*1	2K*1	80*1	0.1 122	4.5 to 5.5 7.0 to 5.5	QFS080-P-1414	L68	
	▲MN101C01C	48*1	2K*1						
	○MN101C01A	32*1	1.5K*1						
	▲MN101C027	16*1	0.5K*1	64*1	0.1 122	4.5 to 5.5 2.0 to 5.5	QFP064-P-1414	L60	
	▲MN101C025	8*1	0.5K*1						
A/D, LCD	▲MN101C03A	32*1	1.5K*1	100*1	0.1 122	4.5 to 5.5 2.0 to 5.5	QFP100-P-1818	L76	
	▲MN101C037	16*1	1K*1						

▲Under development *1: at a single chip mode ○Under planning
(Package Symbol) QFH = Quad Flat High Package, QFP = Quad Flat Package, QFS = Quad Flat L-leaded Small Package

■ 16-Bit Single Chip Microcomputers, MN10200 Family

Category	Type No.	ROM (K Byte)	RAM (×8-bit)	Input/ Output (Lines)	Speed (μs)	Supply Voltage (V)	Package	No.	Remarks
General purpose	MN1020701	56*1	2K*1	85*1	0.167	3.4 to 3.6	QFH100-P-1414	L75	
	MN1020003	Ext.	1K	35	0.125	4.75 to 5.25	QFS080-P-1414	L68	
	MN1020004A	Ext.	Ext.	49	0.125	4.5 to 5.5	QFH100-P-1414	L75	
	MN1020004AFB	Ext.	Ext.	49	0.125	4.5 to 5.5	TQFP100-P-1414	L78	
	MN1020407	32	1K	68	0.125	4.5 to 5.5	QFP084-P-1818	L72	
	MN1020012A	Ext.	Ext.	29	0.1	4.5 to 5.5	QFP128-P-1818	L82	
	▲MN1020012AFA	Ext.	Ext.	29	0.1	4.5 to 5.5	LQFP128-P-1818	L81	
	MN1021213	90	3K	46	0.125	2.7 to 3.6	LQFP128-P-1818	L81	
	MN102P1213	90	3K	46	0.125	2.7 to 3.6	LQFP128-P-1818	L81	
	MN1020015	Ext.	3K	48	0.125 62.5	4.5 to 5.5	QFH100-P-1414	L75	
	MN1020215	16	1K	84	0.125 62.5	4.5 to 5.5	QFH100-P-1414	L75	
	MN1020415	32	2K	84	0.125	4.5 to 5.5	QFH100-P-1414	L75	
	MN1020715	56	3K	84	0.125 62.5	4.5 to 5.5	QFH100-P-1414	L75	
	MN1020019	Ext.	3K	23	0.1 62.5	4.5 to 5.5	QFH064-P-1414B	L56	
	MN1020219	16	1K	52	0.1 62.5	4.5 to 5.5	QFH064-P-1414B	L56	
	MN1020419	32	2K	52	0.1 62.5	4.5 to 5.5	QFH064-P-1414B	L56	
	MN1020819	64	3K	52	0.1 62.5	4.5 to 5.5	QFH064-P-1414B	L56	
	MN102P0819	64	3K	52	0.1 62.5	4.75 to 5.25	QFH064-P-1414B	L56	One time version
	MN1020017	Ext.	4K	108	0.05 0.1	3.0 to 3.6 2.2 to 3.6	LQFP128-P-1818	L81	
	MN1020817	64	3K	108	0.05 0.1	3.0 to 3.6 2.2 to 3.6	LQFP128-P-1818	L81	
	MN1021617	128	4K	108	0.05 0.1	3.0 to 3.6 2.2 to 3.6	LQFP128-P-1818	L81	
Microcontroller servo	MN1020705	56	1536	88	0.167 62.5	2.7 to 5.5 2.7 to 5.5	TQFP120-P-1414 QFP128-P-1818	L79 L82	
For TV	MN102L230	Ext.	2K	23	0.1	4.75 to 5.25	QFP160-P-2828	L87	

▲Under development *1: at a single chip mode

■ 32-Bit Single Chip Microcomputers, MN10300 Family

Category	Type No.	Instruction RAM (K Byte)	Date RAM (K Byte)	Input/ Output (Lines)	Speed (μs)	Supply Voltage (V)	Package	No.	Remarks
General purpose	▲ MN103000	16	16	90*1	0.017	3.2 to 3.4	QFP160-P-2828	L87	

▲Under development *1: All common terminals

(Package Symbol) LQFP = Low Prafile Quad Flat Package, QFH = Quad Flat High Package, QFP = Quad Flat Package, QFS = Quad Flat L-leaded Small Package, TQFP = Thin Quad Flat Package

■ Digital Signal Processors (DSP) , MN1900/1920/1930 Family

Category	Type No.	ROM (K ×32-bit)	RAM1 (×16-bit)	RAM2 (×16-bit)	Speed (ns)	Supply Voltage (typ) (V)	Package	No.	Evaluator	Remarks
MN1900 series	MN19091A	8 ext.	258 built-in	512 built-in, 4K ext.	100	4.75 to 5.25	PGA144-C-S15U	L103	—	Evaluator
	MN19041A	4	258 built-in	512 built-in, 4K ext.	100	4.75 to 5.25	QFP084-P-1818	L72	MN19091A	
	MN1900003	64 ext.	514 built-in	2K built-in, 64K ext.	100	4.75 to 5.25	PGA144-C-S15U	L103	—	Evaluator MN19091A RAM expanded version
	MN1900402	4	514 built-in	1K built-in, 4K ext.	100	4.75 to 5.25	QFP084-P-1818	L72	MN1900003	MN19041A RAM expanded version
	MN1900403	4	258 built-in	512 built-in	200	3.5 to 5.5	TQFI080-P-0530	L67	MN19091A	
	MN1900011	64 ext.	1026 built-in	3K built-in 512K ext.	100	4.75 to 5.25	PGA181-C-S15U	L105	—	Evaluator
	MN1901012	10	450 built-in	1792 built-in data ROM 3.5K built-in	83	4.75 to 5.5	QFP100-P-1818	L76	MN1900011	PCM-10DEC 1/F built-in
	MN1901611	16	514 built-in	2.5K built-in 512K ext.	80	4.75 to 5.5	QFH128-P-1818	L83	MN1900011	PCM-10DEC 1/F built-in
MN1920 series	MN1920001	64 ext.*2	514*3 built-in	2.5K built-in*3, 16M ext.	80	4.75 to 5.25	QFP208-P-2828 PGA281-C-S19U	L94 L107	—	Evaluator
	MN1920802	8*2	514*3 built-in	2K built-in*3, 16M ext.	80	4.75 to 5.25	QFP124-P-2828	L80	MN1920001	
MN1930 series	MN1932801	28*3	—	6K built-in data ROM 30K built-in	27	2.7 to 3.3	TQFP100-P-1414	L78	MN1932801	Double speed MAC built-in
	▲MN1933211	32*3	—	6K built-in data ROM 30K built-in	21.7	2.7 to 3.3	TQFP100-P-1414	L78	MN1933211	Double speed MAC built-in
Low power series	MN1920811	8	512 built-in	2K built-in data ROM 2.5K built-in	93	3.5 to 3.9	LQFP128-P-1818	L81	MN1920811	Double speed MAC built-in
	MN1920813	8	512 built-in	2K built-in data ROM 2.5K built-in	93 68	3.5 to 3.9 4.5 to 5.5	TQFP100-P-1414	L78	MN1920811	Double speed MAC built-in
	MN1921814	18	512 built-in	2.75K built-in data ROM 2.5K built-in	92 68	3.5 to 3.9 4.5 to 5.5	TQFP100-P-1414	L78	MN1920811	Double speed MAC built-in
	MN1921816	18	512 built-in	2.75K built-in data ROM 2.5K built-in	0.092	2.7 to 3.3	TQFP100-P-1414	L78	MN1920811	Double speed MAC built-in

▲Under development *1 (K × 16-bit) *2 (K ×40-bit) *3 (× 24-bit)

■ Audio Signal Processor (ASP), MN1940 Family

Category	Type No.	ROM (×32-bit)	RAM1 (×16-bit)	RAM2 (×24-bit)	Speed (ns)	Supply Voltage (V)	Interrupts (Level)	Package	No.
ASP	MN19411	192	128	128 built-in	80	4.5 to 5.5	0	QFP064-P-1818	L58
	MN19412A	512	256	256 built-in	50	4.75 to 5.25	3	QFP084-P-1818	L72
	▲MN19413	512	256	256 built-in	50	4.75 to 5.25	3	QFP100-P-1818	L76

▲Under development

(Package Symbol) LQFP = Low Prafile Quad Flat Package, PGA = Pin Grid Array, QFH = Quad Flat High Package, QFP = Quad Flat Package, TQFI = Thin Quad Flat I-leaded Package, TQFP = Thin Quad Flat Package

■ Support Tools

PanaXSeries (Pana Cross Series)——————New Development Support System for Microcomputers

PanaXSeries is the name for the new development support system dedicated for **Panasonic** microcomputers.

PanaXSeries offers following development support system.

PanaXSeries Hardware Product:
In-circuit emulator, Target probe, PROM writer
(You have only to change the target probe to apply to every product type in the same series)

PanaXSeries Software Product:
High-level language CL/1, C
Macro-assembler
Source code debugger for CL/1, C source (assembler source)

PanaXSeries helps the customers improve software development efficiency of microcomputer-mounted equipments with four objects such as high efficiency, high-speed, high reliability and standardization.

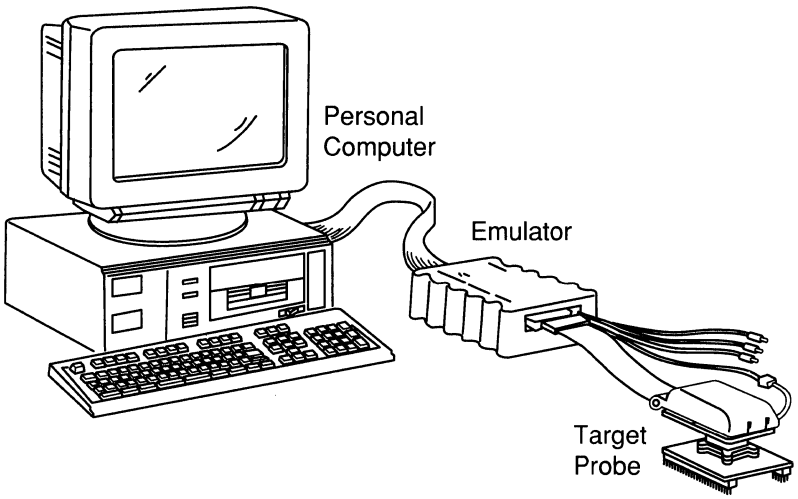

Diag. 1 **PanaXSeries** Basic Composition

■ PanaXSeries Product List

Corresponding	Hardware		Software		
	In-circuit Emulator	Probe	C Compiler	Macro-assembler	Source Code Debugger
MN1500 series	●	●	×	●	● *1
MN1700 series	●	●	×	●	●
MN1860 series	○ *2	○ *2	×	●	○ *2
MN1870 series	●	●	● *4	●	●
MN1880 series	●	●	● *4	●	●
MN1930 series	● *3	● *3	×	●	● *3
MN10100 series	●	●	●	●	●
MN10200 series	●	●	●	●	● (C Source debugger)
MN10300 series	○	○	○	○	○

●: **PanaXSeries** specifications ○ : **PanaXSeries** specifications under development ×: Nil

*1: Assembler source debugger
*2: The support tool by Computex (Inc.) is available
*3: The support tool by Object (Inc.) is available.
*4: CL/1 Compiler

■ In-circuit emulator is common to each series.
■ A workstation version is available for the compiler/assembler.

■ Microcomputer Peripheral LSIs

Category	Type No.	Process	Functions	Supply Voltage (V)	Package	No.
FLP driver	MN12510	CMOS	FLP drive control, Key scan control	−30, +5	SDIP042-P-0600 QFP044-P-1010	L22 L50
LCD driver	MN1256	CMOS	8 digits, 7 segments, FEM type liquid crystal display	−5, −2.5	QFP040-P-1010	L46
	MN1258		180 segments driver for dots matrix LCD panel	+5, −20	Chip	—
LCD/CRT interface	MN5502	CMOS	Single chip LCD/PDP/CRT control LSI. Max 720 ×512 dots	+5	QFP124-P-2828	L80
Voltage detector	MN1380	CMOS	Voltage detection (CMOS output type)	+1.5 to +6.0	M type	L26
	MN13801		Voltage detection (N-ch open drain type)	+1.5 to +6.0	M type	L26
	MN13802		Voltage detection (CMOS output inversion type)	+1.5 to +6.0	M type	L26
	MN1381		Voltage detection (CMOS output type)	+1.5 to +6.0	TO-92 type	L28
	MN13811		Voltage detection (N-ch open drain type)	+1.5 to +6.0	TO-92 type	L28
	MN13812		Voltage detection (CMOS output inversion type)	+1.5 to +6.0	TO-92 type	L28
	MN1382		Voltage detection (CMOS output type)	+1.5 to +6.0	Mini 3P	L27
	MN13821		Voltage detection (N-ch open drain type)	+1.5 to +6.0	Mini 3P	L27
	MN13822		Voltage detection (CMOS output inversion type)	+1.5 to +6.0	Mini 3P	L27

■ 16-Bit Microprocessor Peripheral LSIs

Category	Type No.	Process	Functions	Package	No.
16-bit peripheral	MN12861	CMOS	Clock generator, Timer/Counter, Programmable I/O, Interrupt controller	QFP100-P-1818	L76
	MN12862		Clock generator, Timer/Counter, DMAC, Interrupt controller	QFP100-P-1818	L76
	MN5501		Timer/Counter ×2, Interrupt control- ler ×2, USART	QFP100-P-1818	L76

(Package Symbol) QFP = Quad Flat Package, SDIP = Shrunk Dual-In-Line Package

■ Dynamic RAMs

● 4M DRAMs (5V version)

Organization (words ×bits)	Type No.	Access time max (ns)	Cycle time min (ns)	Refresh (cycles/ms)	Maximum Supply Current		Package		Remarks
					Active (mA)	CBR self refresh (μA)		No.	
1M ×4	MN414400CSJ	60/70	110/130	1024/16	85/75	—	SOJ026-P-0300A	M12	Fast page mode
	MN414400CTT	60/70	110/130	1024/16	85/75	—	TSOP026-P-0300A	M23	Fast page mode
512K ×8	MN414800CSJ	60/70	110/130	1024/16	85/75	—	SOJ028-P-0400	M14	Fast page mode
256K ×16	MN414170CSJ	70	130	1024/16	100	—	SOJ040-P-0400	M16	Fast page mode 1CAS ·2WE
	MN414260CSJ	70	130	512/8	140	—	SOJ040-P-0400	M16	Fast page mode 2CAS ·1WE
	MN414260CTT	70	130	512/8	140	—	TSOP044-P-0400A	M26	Fast page mode 2CAS ·1WE
	MN414270CSJ	70	130	512/8	140	—	SOJ040-P-0400	M16	Fast page mode 1CAS ·2WE

● 4M DRAMs (5V version, CBR self refresh operation)

Organization (words ×bits)	Type No.	Access time max (ns)	Cycle time min (ns)	Refresh (cycles/ms)	Maximum Supply Current		Package		Remarks
					Active (mA)	CBR self refresh (μA)		No.	
1M ×4	MN424400CSJ	60/70	110/130	1024/128	85/75	150	SOJ026-P-0300A	M12	Fast page mode
	MN424400CTT	60/70	110/130	1024/128	85/75	150	TSOP026-P-0300A	M23	Fast page mode
512K ×8	MN424800CSJ	60/70	110/130	1024/128	85/75	150	SOJ028-P-0400	M14	Fast page mode
256K ×16	MN424170CSJ	70	130	1024/128	100	250	SOJ040-P-0400	M16	Fast page mode 1CAS ·2WE
	MN424260CSJ	70	130	512/64	140	250	SOJ040-P-0400	M16	Fast page mode 2CAS ·1WE
	MN424260CTT	70	130	512/64	140	250	TSOP044-P-0400A	M26	Fast page mode 2CAS ·1WE
	MN424270CSJ	70	130	512/64	140	250	SOJ040-P-0400	M16	Fast page mode 1CAS ·2WE

(Package Symbol) SOJ = Small Outline J-Bend Package, TSOP = Thin Small Outline Package

■ Dynamic RAMs

● 4M DRAMs (3.3V version)

Organization (words ×bits)	Type No.	Access time max (ns)	Cycle time min (ns)	Refresh (cycles/ms)	Maximum Supply Current		Package		Remarks
					Active (mA)	CBR self refresh (μA)		No.	
1M ×4	MN41V4400SJ	70/80	130/150	1024/16	70/60	–	SOJ026-P-0300A	M12	Fast page mode
	MN41V4400TT	70/80	130/150	1024/16	70/60	–	TSOP026-P-0300A	M23	Fast page mode
512K ×8	MN41V4800TT	70/80	130/150	1024/16	70/60	–	TSOP028-P-0400	M25	Fast page mode
256K ×16	MN41V4260SJ	80	150	512/8	130	–	SOJ040-P-0400	M16	Fast page mode 2CAS ·1WE
	MN41V4260TT	80	150	512/8	130	–	TSOP044-P-0400A	M26	Fast page mode 2CAS ·1WE

● 4M DRAMs (3.3 version, CBR self refresh operation)

Organization (words ×bits)	Type No.	Access time max (ns)	Cycle time min (ns)	Refresh (cycles/ms)	Maximum Supply Current		Package		Remarks
					Active (mA)	CBR self refresh (μA)		No.	
1M ×4	MN42V4400SJ	70/80	130/150	1024/128	70/60	80	SOJ026-P-0300A	M12	Fast page mode
	MN42V4400TT	70/80	130/150	1024/128	70/60	80	TSOP026-P-0300A	M23	Fast page mode
512K ×8	MN42V4800TT	70/80	130/150	1024/128	70/60	80	TSOP028-P-0400	M25	Fast page mode
256K ×16	MN42V4260SJ	80	150	512/64	130	250	SOJ040-P-0400	M16	Fast page mode 2CAS ·1WE
	MN42V4260TT	80	150	512/64	130	250	TSOP044-P-0400A	M26	Fast page mode 2CAS ·1WE

(Package Symbol) SOJ = Small Outline J-Bend Package, TSOP = Thin Small Outline Package

■ Dynamic RAMs

● 16M DRAMs (5V version)

Organization (words ×bits)	Type No.	Access time max (ns)	Cycle time min (ns)	Refresh (cycles/ms)	Maximum Supply Current		Package		Remarks
					Active (mA)	CBR self refresh (μA)		No.	
4M ×4	MN4116400BTT	50/60/70	90/110/130	4096/64	80/70/60	—	TSOP026-P-0300B	M24	Fast page mode
	MN4117400BSJ	50/60/70	90/110/130	2048/32	110/100/90	—	SOJ026-P-0300B	M13	Fast page mode
	MN4117400BTT	50/60/70	90/110/130	2048/32	110/100/90	—	TSOP026-P-0300B	M24	Fast page mode
	MN4117405BSJ	50/60/70	90/110/130	2048/32	110/100/90	—	SOJ026-P-0300B	M13	EDO mode
	MN4117405BTT	50/60/70	90/110/130	2048/32	110/100/90	—	TSOP026-P-0300B	M24	EDO mode
2M ×8	▲MN4117805BSJ	50/60/70	90/110/130	2048/32	120/110/100		SOJ028-P-0400B	M15	EDO mode
1M ×16	MN4116160BSJ	60/70	110/130	4096/64	90/80	—	SOJ042-P-0400	M17	Fast page mode 2CAS ·1WE
	MN4116160BTT	60/70	110/130	4096/64	90/80	—	TSOP050-P-0400A	M28	Fast page mode 2CAS ·1WE
	MN4118160BSJ	60/70	110/130	1024/16	150/140	—	SOJ042-P-0400	M17	Fast page mode 2CAS ·1WE
	MN4118160BTT	60/70	110/130	1024/16	150/140	—	TSOP050-P-0400A	M28	Fast page mode 2CAS ·1WE
	MN4118165BSJ	60/70	110/130	1024/16	150/140	—	SOJ042-P-0400	M17	EDO mode 2CAS ·1WE

▲Under development

● 16M DRAMs (5V version, CBR self refresh operation)

Organization (words ×bits)	Type No.	Access time max (ns)	Cycle time min (ns)	Refresh (cycles/ms)	Maximum Supply Current		Package		Remarks
					Active (mA)	CBR self refresh (μA)		No.	
4M ×4	MN4217400BSJ	50/60/70	90/110/130	2048/128	110/100/90	150	SOJ026-P-0300B	M13	Fast page mode
	MN4217400BTT	50/60/70	90/110/130	2048/128	110/100/90	150	TSOP026-P-0300B	M24	Fast page mode
1M ×16	MN4216160BSJ	60/70	110/130	4096/128	90/80	150	SOJ042-P-0400	M17	Fast page mode 2CAS ·1WE
	MN4216160BTT	60/70	110/130	4096/128	90/80	150	TSOP050-P-0400A	M28	Fast page mode 2CAS ·1WE

(Package Symbol) SOJ = Small Outline J-Bend Package, TSOP = Thin Small Outline Package

■ Dynamic RAMs

● 16M DRAMs (3.3V version)

Organization (words ×bits)	Type No.	Access time max (ns)	Cycle time min (ns)	Refresh (cycles/ms)	Maximum Supply Current		Package		Remarks
					Active (mA)	CBR self refresh (μA)		No.	
4M ×4	MN41V17400BTT	50/60/70	90/110/130	2048/32	110/100/90	–	TSOP026-P-0300B	M24	Fast page mode
	MN41V17405BTT	50/60/70	90/110/130	2048/32	110/100/90	–	TSOP026-P-0300B	M24	EDO mode
1M ×16	MN41V16160BTT	60/70	110/130	4096/64	90/80	–	TSOP050-P-0400A	M28	Fast page mode 2CAS ·1WE
	MN41V18160BTT	60/70	110/130	1024/16	150/140	–	TSOP050-P-0400A	M28	Fast page mode 2CAS ·1WE
	MN41V16165BSJ	60/70	110/130	4096/64	90/80	–	SOJ042-P-0400	M17	EDO mode 2CAS ·1WE
	MN41V16165BTT	60/70	110/130	4096/64	90/80	–	TSOP050-P-0400A	M28	EDO mode 2CAS ·1WE

● 16M DRAMs (3.3V version, CBR self refresh operation)

Organization (words ×bits)	Type No.	Access time max (ns)	Cycle time min (ns)	Refresh (cycles/ms)	Maximum Supply Current		Package		Remarks
					Active (mA)	CBR self refresh (μA)		No.	
4M ×4	MN42V17400BTT	50/60/70	90/110/130	2048/128	110/100/90	150	TSOP026-P-0300B	M24	Fast page mode
	MN42V17405BTT	50/60/70	90/110/130	2048/128	110/100/90	150	TSOP026-P-0300B	M24	EDO mode
1M ×16	MN42V16160BTT	60/70	110/130	4096/128	90/80	150	TSOP050-P-0400A	M28	Fast page mode 2CAS ·1WE
	MN42V18160BTT	60/70	110/130	1024/128	150/140	150	TSOP050-P-0400A	M28	Fast page mode 2CAS ·1WE
	MN42V18165BTT	60/70	110/130	1024/128	150/140	150	TSOP050-P-0400A	M28	EDO mode 2CAS ·1WE

● 16M Synchronous DRAMs (3.3V version, CBR self refresh operation)

Organization (words ×bits × banks)	Type No.	Cycle time min (ns)	Refresh (cycles/ms)	Maximum Supply Current		Package		Remarks
				Active (mA)	CBR self refresh (μA)		No.	
1M ×8 ×2	▲MN4SV17080T	10/12/15	2048/32	110/100/90	1000	TSOP044-P-0400	M27	Full Function
512K ×16 ×2	MN4SV17160T	10/12/15	2048/32	120/110/100	1000	TSOP050-P-0400	M29	Full Function
	MN4SV17160T-A	10/12/13	2048/32	120/110/105	2000	TSOP050-P-0400	M29	Limited Function

▲Under development

(Package Symbol) SOJ = Small Outline J-Bend Package, TSOP = Thin Small Outline Package

■ AS Memories

Organization (words ×bits)	Type No.	Access time max (ns)	Cycle time min (ns)	Refresh (cycles/ms)	Maximum Supply Current		Supply Voltage (V)	Package		Remarks
					Active (mA)	Standby (mA)			No	
256K ×4	MN4775AS	25	30	–	35	5	4.5 to 5.5	SOP028-P-0425	M20	FIFO memory
256K ×4	MN4776AS	25	30	–	35	5	4.5 to 5.5	SOP028-P-0425	M20	FIFO memory
256K ×8	MN4777AS	25	30	–	60	6	4.5 to 5.5	SOP028-P-0425	M20	FIFO memory
256K ×8	MN4778AS	25	30	–	6	6	4.5 to 5.5	SOP028-P-0425	M20	FIFO memory
32,768 ×8 ×8	MN4703AFS	25	30	512/8	100	3	4.5 to 5.5	SSOP050-P-0850	M22	Field memory 8-pixel based random access possible

■ AS Memories (Low voltage specification)

Organization (words ×bits)	Type No.	Access time max (ns)	Cycle time min (ns)	Refresh (cycles/ms)	Maximum Supply Current		Supply Voltage (V)	Package		Remarks
					Active (mA)	Standby (mA)			No.	
768 ×290 ×4	MN4792S	65 60	70 70	– –	35 49	10 10	3.3 to 3.9 4.5 to 5.5	SOP028-P-0425	M20	FIFO memory Random line access possible
256K ×4	MN47V75S	25	30	–	35	5	3.0 to 3.6	SOP028-P-0425	M20	FIFO memory
256K ×4	MN47V76S	25	30	–	35	5	3.0 to 3.6	SOP028-P-0425	M20	FIFO memory
256K ×8	MN47V77S	25	30	–	55	6	3.0 to 3.6	SOP028-P-0425	M20	FIFO memory
256K ×8	MN47V78S	25	30	–	55	6	3.0 to 3.6	SOP028-P-0425	M20	FIFO memory
77,760 ×8 ×8	MN4706F	45	50	1080/4	73	3	2.7 to 3.3	TQFP100-P-1414B	M10	Field memory 8-pixel based random access possible
90,720 ×8 ×8	MN4707F	45	50	1080/4	73	3	2.7 to 3.3	TQFP100-P-1414B	M10	Field memory 8-pixel based random access possible
77,960 ×8 ×8	▲MN47V06AF	45	50	1080/4	50	3	2.7 to 3.3	TQFP100-P-1414B	M10	Field memory 8-pixel based random access possible
90,720 ×8 ×8	▲MN47V07AF	45	50	1080/4	50	3	2.7 to 3.3	TQFP100-P-1414B	M10	Field memory 8-pixel based random access possible
768 ×313 ×12	MN4795F	60	70	–	40	10	2.7 to 3.3	TQFP100-P-1414D	M11	3 port FIFO memory Random line access possible

▲Under development

(Package Symbol) SOP = Small Outline Package (PANAFLAT PACKAGE), SSOP = Shrunk Small Outline Package,
TQFP = Thin Quad Flat Package

■ EEPROMs

Density (bit)	Type No.	Organization (words ×bits)	Supply Voltage (V)	Package	No.	Process	Remarks
512	MN6310/S	512 ×1	2.6 to 3.5	DIP008-P-0300A SOP008-P-0225	M3/M18	CMOS EEPROM	Bit sequencial method serial EEPROM V_{CC} = 5V, V_{PP} = 21V at programming
2K	MN61113/S	2048 ×1	2.6 to 3.5	DIP008-P-0300A SOP008-P-0225	M3/M18	CMOS EEPROM	Bit sequencial method serial EEPROM Input pin ② with pull-up resistor, and ⑤, ⑥, ⑦ and ⑧ with pull-down resistor
	MN6311/S	2048 ×1	2.6 to 3.5	DIP008-P-0300A SOP008-P-0225	M3/M18	CMOS EEPROM	Bit sequencial method serial EEPROM Input pin is without pull-up and pull-down resistors
1K	MN63121/S	64 ×16	1.8 to 5.5	DIP008-P-0300A SOP008-P-0225	M3/M18	CMOS EEPROM	Serial port direct connection type serial EEPROM
2K	MN63112/S	128 ×16/ 256 ×8	1.8 to 5.5	DIP008-P-0300A SOP008-P-0225	M3/M18	CMOS EEPROM	3-wire bus method serial I/O EEPROM

■ IC Card EEPROMs

Density (bit)	Type No.	Organization (words ×bits)	Supply Voltage (V)	Package	No.	Process	Remarks
1K	MN63151	64 ×16	4.5 to 5.5	—	—	CMOS EEPROM	Security function incorporated IC card EEPROM
4K	▲MN63154	256 ×16	4.5 to 5.5	—	—	CMOS EEPROM	Security function incorporated IC card EEPROM

▲Under development

(Package Symbol) DIP = Dual-In-Line Package, SOP = Small Outline Package (PANAFLAT PACKAGE)

■ CMOS Gate Arrays

● MN5C000 Series (Sea-of-Gate) (Some products under development)

Internal gate delay time	0.110ns 3.3V, F.O. = 2, Standard wiring length
Gate density	Max. 150 gate (number of laid-down gates) Gate use ratio: 35 – 45% (2-layer wiring), 65 – 85% (three-layer wiring)
Power consumption	1.6 μW/MHz (standard type 2-input NAND gate, 3.3V)
Drive current	Max. 16mA
Process	CMOS 0.35μ m, two/three-layer Al wiring
Compilable memory	Three high-density types, Two low power consumption types
Function block	Counter, adder, multiplier (compilable). MNT7C000 series functional block can be embedded.
I/O interface	LVCMOS, LVTTL, TTL, PSI, SCSI

● MN5AA000 Series (Sea-of-Gate)

Type No.			MN5AA003	MN5AA005	MN5AA010	MN5AA017	MN5AA020	MN5AA030	MN5AA040	MN5AA060	MN5AA090	MN5AA120	MN5AA180
Nominal array gate count[Note 1)]			3564	5412	11712	17316	21912	31800	42456	61299	90720	118728	182196
Internal array cell count[Note 2)]			2376	3608	7808	11544	14608	21200	28304	40866	60520	79152	12464
Usable gate count[Note 3)]			1400	2100	4600	6900	8700	12700	16900	24500	36300	47400	72800
Maximum signal pin count			72	100	128	148	160	184	208	240	284	320	388
Total built-in PAD count			80	108	136	156	168	192	216	248	292	328	396
Recommended power supply pin count[Note 4)]			4	6	8	8	10	12	12	16	20	20	20
Internal gate delay time			0.32 ns (V_{DD} = 5V), 0.50 ns (V_{DD} = 3V) 2 input NAND, Standard cell, F.O. = 2, Standard wiring length										
Package (See MOS LSI Package outline)	SDIP		64	64	64	—	—	—	—	—	—	—	—
	QFP	Sq.	44, 64(S)	44, 64(S), 84	44, 64(S), 84, 124, 128	84, 124, 128, 148	84, 124, 128, 148, 160	84, 124, 128, 148, 160, 176*	84, 124, 128, 148, 160, 176, 208*	84, 124, 128, 148, 160, 176, 208	84, 124, 128, 148, 160, 208	84, 124, 128, 148, 160, 208	124, 148, 208
		Rec.	—	—	—	—	—	—	—	—	256*	256*	256*
	QFH	Sq.	64, 80	64, 80, 100	64, 80, 100	80, 100	80, 100	80, 100	100	—	—	—	—
		Rec.	—	80, 100	80, 100	80, 100	80, 100	80, 100	100	100	—	—	—

Note 1) Nominal array gate count: Internal cell count refened to 2-input NAND. (1B.C. =1.5 Gate)

Note 2) Internal array cell count: Converted maximum cell numbers from basic cell (B.C) numbers listed in "CMOS gate array macro-cell table" of MN5AA000 series.

Note 3) Usable gate count: Rough estimation of available maximum array gate count in the circuit that does not include ROM/RAM function block. It is assumed that 40% of incorporated gate count is usable.

Note 4) Recommended power supply pin count: Differ according to simultaneously changed pin count and package. For the details, please refer to our Semiconductor Design Center.

*: For the details, please refer to our Semiconductor Design Center.

(Package Symbol) QFH = Quad Flat High Package, QFP = Quad Flat Package, Rec. = Rectangle, SDIP = Shrunk Dual-In-line Package, Sq. = Squre

● MN56A00 Series (Sea-of-Gate)

Type No.			MN56A25	MN56A34	MN56A45	MN56A57	MN56A69
Nominal array gate count[Note 1)]			25596	33852	44856	57206	69264
Internal array cell count[Note 2)]			21330	28210	37380	47672	57720
Usable gate count[Note 3)]			10238	13540	17942	22882	27705
Maximum signal pin count			186	210	238	256	256
Supply pins[Note 4)]			10	10	10	10	10
Internal gate delay time			0.6 ns (V_{DD} = 5V, F.O. = 2, ℓ = 2 mm)				
Package (See MOS LSI Package outline)	SDIP		64	—	—	—	—
	QFP	Sq.	64, 84, 100, 124, 128, 148, 160	64, 84, 100, 124, 128, 148, 160, 208	64, 84, 100, 124, 128, 148, 160, 208	64, 84, 100, 124, 128, 148, 160, 208	124, 148, 160, 208
		Rec.	—	—	—	—	256
	QFH	Sq.	100	—	—	—	—
		Rec.	80, 100	80, 100	—	—	—

● MN56E00 Series (Sea-of-Gate)

Type No.			MN56E02	MN56E03	MN56E06	MN56E10
Nominal array gate count[Note 1)]			2400	3672	6271	10200
Internal array cell count[Note 2)]			2000	3060	5226	8500
Usable gate count[Note 3)]			960	1468	2508	4080
Maximum signal pin count			74	90	118	148
Supply pins[Note 4)]			6 (64-QFP), 10 (84-QFP)	10	8 (124-QFP), 10 (128-QFP)	12
Internal gate delay time			0.6 ns (V_{DD} = 5V, F.O. = 2, ℓ = 2 mm)			
Package (See MOS LSI Package outline)	QFP	Sq.	84	84, 100	124, 128	160
	QFH	Sq.	48, 68	48, 100	—	—
		Rec.	—	100	—	—

● MN56000 Series (Channel Type)

Type No.			MN56020	MN56030	MN56050	MN56070
Nominal gate count[Note 1)]			2000	3000	5000	7000
Internal cell count[Note 2)]			2090	3220	4928	7128
Maximum signal pin count			92	112	134	158
Supply pins[Note 4)]			8	8	10	10
Internal gate delay time			0.6ns (V_{DD} = 5V, F.O. = 2, ℓ = 2 mm)			
Package (See MOS LSI Package outline)	SDIP		64	64	64	64
	QFP	Sq.	40, 44, 64(S), 64, 84, 100	40, 64(S), 64, 84, 100, 124	40, 64(S), 64, 84, 100, 124, 128, 148	40, 64(S), 64, 84, 100, 124, 128, 148, 160
	QFH	Sq.	64, 80, 100	64, 80, 100	80, 100	80, 100
		Rec.	80, 100	80, 100	80, 100	80, 100
	QFJ		—	84	84	—

Note 1) Nominal array gate count: No. of internal cells refrred to 2-input NAND gate as is 1 gate.
Note 2) Internal array cell count, Internal cell count: Maximum cell numbers referred to basic cell numbers listed in "CMOS gate array macro-cell table" of MN56000/MN56A00/MN56E00/MN59000 series.
Note 3) Usable gate count: Rough estimation of available maximum-gate numbers in the circuit that does not include ROM/RAM function block.
Note 4) Power supply pin count varies according to simultaneously changed pin count and package. For the details, please refer to our Semiconductor Design Center.

(Package Symbol) QFH = Quad Flat High Package, QFJ = Quad Flat J-leaded Plastic Package, QFP = Quad Flat Package, Rec. = Rectangle, SDIP = Shrunk Dual-In-line Package, Sq. = Squre

■ CMOS Standard Cells

● Standard Specifications

Item \ Type No.		MN7C000 Series	MN7D000 Series (under partial development)	MN7B000 Series
Max. gate count		1000k gates	400k gates	400k gates
Process		CMOS 0.35μm, 2/3 layer Al wiring	CMOS 0.6μm, 2/3 layer Al wiring	CMOS 0.5μm, 2/3 layer Al wiring
Library		3.3V, 2V*2	5V, 3.3V	3V, 2V*2
Basic macro cell	Speed	0.124ns*1 (Super high-speed cell 3.3V)	0.172ns*1 (Super high-speed cell 5V)	0.255ns*1 (High-speed cell 3V)
	Power consumption	0.67μW/MHz (Super low power cell 3.3V)	2.30μW/MHz (Super low power cell 5V)	0.95μW/MHz (Super low power cell 3V)
	Type	650 types 4 types of super high speed/high speed/standard/super low power	650 types 4 types of super high speed/high speed/standard/super low power	520 types 4 types of high speed/high speed/standard/super low power
IO cell	Driving current	1,2,4,8,16mA(3.3V) Open drain 48mA max.	2,4,8,16,24mA(5V) 1,2,4,8,12mA(3.3V)	1,2,4,8,16mA(3V)
	Input/Output I/F	LVCMOS, LVTTL, 5V input/output possible, 3.3V/2V level shifter, boundary scan	CMOS, TTL, LVCMOS, LVTTL, 5V/3.3V level shifter, boundary scan	Compatible with LVCMOS, LVTTL, 5V
	Type	110 types	40 types	100 types
Function block	Analog cell	A/D converter (partially under development) D/A converter Operational amplifier Comparator PLL	A/D converter D/A converter Operational amplifier Comparator PLL	A/D converter D/A converter VCO
	Memory (compilable)	RAM (asynchronous/synchronous) ROM (synchronous) Line memory (input/output synchronous)	RAM (asynchronous/synchronous) ROM (synchronous) Line memory (input/output synchronous)	RAM (asynchronous/synchronous) ROM (synchronous) Line memory (input/output synchronous)
	Multiplier (compilable)	Standard/high speed/super high speed (fixed block)	Standard/high speed/super high speed (fixed block)	Standard/high speed
	CPU peripheral cell	(Under development)	(Under development)	—

Item \ Type No.		MN7A000 Series	MN76000 Series
Max. gate count		200k gates	100k gates
Process		CMOS 0.8μm, 2 layer Al wiring	CMOS 1.2μm, 2 layer Al wiring
Library		5V, 3V	5V
Basic macro cell	Speed	0.401ns*1 (Standard cell 5V)	0.9ns*1
	Power consumption	5.01μW/MHz (Super low power cell 5V)	17.7μW/MHz (5V)
	Type	360 types, including 3 types of standard/low power/super low power	200 types
IO cell	Driving current	2, 4, 8, 12, 16, 24mA(5V) 1, 2, 4, 6, 8, 12mA(3V)	1.6, 4, 12mA(5V)
	Input/Output I/F	CMOS, TTL, LVCMOS, LVTTL	CMOS, TTL
	Type	90 types	110 types
Function block	Analog cell	A/D converter D/A converter Operational amplifier comparator analog switch PLL	A/D converter D/A converter Operational amplifier comparator analog switch
	Memories	RAM (asynchronous/synchronous (compilable)) ROM (synchronous (fixed block)) Line memory (input/output synchronous, asynchronous (compilable))	RAM (asynchronous (compilable)) RAM (synchronous (fixed block)) ROM (synchronous (fixed block))
	Multiplier (compilable)	Asynchronous 6 ×6 to 32 ×32bit	—
	CPU peripheral cell	12 types	11 types

*1: F.O. = 2 Standard wiring length *2: 2V library: analog cell, I/O cell is not included in the line-up

● Standard Cells Package List (Numerical value in the list means pin count.)

QFP, QFH, TQFP, LQFP Type

Package	Dimension (unit) / Pin pitch (mm)	(mm ×mm)										
		7□	10□	12□	14□	14 ×20	18□	20□	24□	28□	28 ×40	40□
QFP*2	0.8		40, 44 1.5t, 2.0t	48 2.0t	64 2.0t		84 2.5t			124 3.5t		
	0.65			64 2.0t	80 2.0t		100 2.5t			148, 160 3.5t		
	0.5						128 2.5t	144 2.7t	176 3.3t	208 3.5t	256 4.0t	
QFH*2	0.8		44 2.8t		64 2.8t	80 3.0t	84 3.3t					
	0.65	32 2.5t		64 2.8t	80 2.8t	100 3.0t						
	0.5	48 2.5t	64 2.8t	80, 84 2.8t	100 2.8t		128 3.3t					
TQFP LQFP	0.8	▲32 1.0t										
	0.5	48 1.0t	64 1.0t	80 1.0t	100 1.0t		128*1 1.4t		▲176*1 1.4t			
	0.4			▲100 1.0t	▲120 1.0t		164*1 1.4t					
	0.3				▲168 1.0t							
Power QFP	0.8						84 2.5t					
	0.65						100 2.5t			148, 160 3.5t		
	0.5									208 3.5t		304 4.0t
	0.4									▲256 3.5t		

▲Under developmen Package: See MOS LSI Package outline.
Specified in the lower column is the package thickness.
*1 LQFP
*2 For applications of the MN7B series, MN7C series, MN7D series and MN5C series, refer to our semiconductor design center.

DIP, SOP, QFJ, PGA Type

Package	Dimension (unit) / Pin pitch (mm)	(mil)							(Lines)		
		225	300	375	400	600	750	1150	15	17	19
DIP	2.54		16		22	28, 40, 42					
SDIP	1.78				28	40	64				
SOP	1.27		18, 20	22, 24, 28							
SSOP	0.8	16									
	0.65	20									
	0.5		24								
QFJ	1.27							84			
PGA	2.54								181	225	281

Package: See MOS LSI Package outline.

(Package Symbol) DIP = Dual-In-line Package, LQFP = Low Prafile Quad Flat Package, PGA = Pin Grid Array, QFH = Quad Flat High Package, QFJ = Quad Flat J-leaded Plastic Package, QFP = Quad Flat Package, SDIP = Shrunk Dual-In-line Package, SOP = Small Outline Package (PANAFLAT PACKAGE), SSOP = Shrunk Small Outline Package, TQFP = Thin Quad Flat Package

■ Supports

● EDA tool Support Condition

(as of September 1996)

Type / Tool Name	Gate Arrays (Channel type)	Sea-of-Gate (Channel-less type)			Standard Cells				
	MN56000	MN56A00 MN56E00	MN5AA000	MN5C000	MN76000	MN7A000	MN7B000	MN7C000	MN7D000
Synopsys	○	○	○	○	○	○	○	○	○
Verilog-XL	○	○	○	○	○	○	○	○	○
VCS	○	○	○	○	○	○	○	○	○
MOTIVE	–	–	○	○	–	○	○	○	○
IDEA V8	○	○	○	–	○	○	○	○	○
IDEA V7	○	○	○	–	○	○	○	–	–
Workview PLUS Powerview	○	○	○	–	○	○	○	–	–
VSS	–	–	○	–	–	○	○	○	△
AutoLogic	–	–	○	–	–	○	–	–	–
Concept	–	–	○	–	–	○	○	–	–
GRAG	○	○	–	–	–	–	–	–	–
IKOS	○	○	–	–	–	–	–	–	–

○…Under support, △…Under preparation

Synopsys (Synopsys, Inc.)
Verilog-XL (Cadence Design Synstems, Inc.)
VCS (Viewlogic Systems, Inc.)
MOTIVE (Quad Design Technology, Inc.)
IDEA (Mentor Graphics Corporation)
Workview PLUS/Powerview (Viewlogic Systems, Inc.)
VSS (Synopsys, Inc.)
AutoLogic (Mentor Graphics Corporation)
Concept (Cadence Design Systems, Inc.)
GRAG
IKOS (IKOS SYSTEMS, INC.)

■CCD Area Image Sensors

Size	Color or B/W	Type No.	Effective* Pixel Count H	Effective* Pixel Count V	Transfer System	TV System	S/N typ (dB)	Saturation Output typ Note) (mV)	Sensitivity Color (F8) B/W (F8) typ (mV)	Smear Sm typ (%)	Lag typ (%)	H.Res. typ (TV)	V.Res. typ (TV)	Package	No.
1/5	Color	MN37701FP	362	492	IT	NTSC	56	900	200	0.007	0	250	350	WDIP014-P-0400D	C8
		▲MN37801FP	358	583	IT	PAL (CIF)	56	650	180	0.01	0	230	420	WDIP014-P-0400D	C8
1/4	Color	MN37110FP	512	492	IT	NTSC	62	650	230	0.003	0	330	350	WDIP014-P-0400C	C8
		MN3713CFE	858	614	IT	NTSC	60	600	200	0.02	0	430	350	WDIP016-G-0500B	C1
		MN37140FP	771	492	IT	NTSC	58	600	200	0.01	0	480	350	WDIP014-P-0400D	C8
		MN37210FP	512	582	IT	PAL	62	650	230	0.003	0	330	420	WDIP014-P-0400C	C8
		MN3723CFE	858	726	IT	PAL	60	550	180	0.02	0	430	420	WDIP016-G-0500B	C1
		▲MN37230FE	858	726	IT	PAL	60	600	180	0.01	0	430	420	WDIP016-G-0500B	C1
		MN37240FP	753	582	IT	PAL	58	550	180	0.01	0	480	420	WDIP014-P-0400D	C8
		▲MN3777PP	659	494	IT	NTSC	—	500	80	0.01	0	350	350	WDIP014-P-0400D	C8
1/3	Color	MN3716MFE	512	492	IT	NTSC	60	900	350	0.002	0	330	350	WDIP016-G-0500B	C1
		MN3717FE	682	492	IT	NTSC	60	600	300	0.01	0	430	350	WDIP016-G-0500B	C1
		MN3718MFE	771	492	IT	NTSC	60	700	300	0.01	0	480	350	WDIP016-G-0500B	C1
		MN3726MFE	512	582	IT	PAL	60	700	300	0.002	0	330	420	WDIP016-G-0500B	C1
		MN3727FE	681	582	IT	PAL	60	500	250	0.01	0	430	420	WDIP016-G-0500B	C1
		MN3728MFE	753	582	IT	PAL	60	700	280	0.01	0	480	420	WDIP016-G-0500B	C1
		MN3776PE	659	494	IT	NTSC	58	400	100	0.02	0	350	350	WDIP016-G-0500B	C1
	B/W	MN3716MAE	512	492	IT	EIA	60	1500	500	0.003	0	360	350	WDIP016-G-0500B	C1
		MN3717AE	682	492	IT	EIA	60	1100	400	0.01	0	480	350	WDIP016-G-0500B	C1
		MN3718MAE	771	492	IT	EIA	60	1000	350	0.01	0	550	350	WDIP016-G-0500B	C1
		MN3726MAE	512	582	IT	CCIR	60	1000	400	0.003	0	360	420	WDIP016-G-0500B	C1
		MN3727AE	681	582	IT	CCIR	60	1000	380	0.01	0	480	420	WDIP016-G-0500B	C1
		MN3728MAE	753	582	IT	CCIR	60	1000	300	0.01	0	550	420	WDIP016-G-0500B	C1
1/2	Color	MN3775RE	850	984	IT	NTSC	58	600	120	0.02	0	600	480	WDIP020-G-0600A	C2
	B/W	MW3752MAE	726	492	FIT	EIA	60	1200	450	0.001	0	530	350	WDIP020-C-0600A	C3
		MW3762MAE	716	582	FIT	CCIR	60	1100	400	0.001	0	530	420	WDIP020-C-0600A	C3
		MW3753MAE	771	492	FIT	EIA	62	1700	750	−125dB	0	560	350	WDIP020-C-0600C	C4
		MW3763MAE	771	582	FIT	CCIR	62	1600	750	−125dB	0	560	420	WDIP020-C-0600C	C4
2/3	B/W	MW3736CKH	768	497	IT	EIA	60	1100	520	−100dB	0	560	350	WDIP020-C-0600D	C5
		MW3746CKH	768	582	IT	CCIR	60	1100	520	−100dB	0	560	420	WDIP020-C-0600D	C5
		MW3758H	966	491	M-FIT	EIA	62	1500	600	−130dB	0	700	350	WDIP032-C-0600B	C7
		MW3759H	1203	491	M-FIT	EIA	60	1400	250	−125dB	0	850	350	WDIP032-C-0600B	C7
		MW3767H	960	585	FIT	CCIR	60	1200	250	−125dB	0	720	420	WDIP022-C-0600B	—
		MW3768H	954	585	M-FIT	CCIR	62	1500	600	−130dB	0	700	420	WDIP032-C-0600B	C7
		MW3769H	1188	585	M-FIT	CCIR	60	1200	250	−125dB	0	850	420	WDIP032-C-0600B	C7
		MW37571AE	966	492	FIT	NTSC	62	1500	600	−125dB	0	700	350	WDIP022-C-0600A	—
		MW3795H	1274	1042	FIT	HDTV	55	600	220	−95dB	0	900	730	WDIP032-C-0710	C6
		MW3795S	1274	1042	FIT	HDTV	55	500	200	−95dB	0	900	730	WDIP032-C-0710	C6
		▲MW3796H	1920	1036	M-FIT	HDTV	—	600	200	−120dB	0	1100	730	—	—

* Effective pixel count includes the transient pixels. [Symbol] IT: Interline transfer system, FIT: Frame interline transfer system Note) The color denotes carrier saturation ▲ Under development ※1/3 Type MN3776PE, 1/4 Type MN3777PP are compatible with all-pixel read VGA.

● Small Package CCD

Size	Color or B/W	Type No.	Effective* Pixel Count H	Effective* Pixel Count V	Transfer System	System	S/N typ (dB)	Saturation Output typ Note) (mV)	Sensitivity Color (F8) B/W (F8) typ (mV)	Smear Sm typ (%)	Lag typ (%)	H.Res. typ (TV)	V.Res. typ (TV)	Package	No.
1/2	Color	MW3737MFH	682	492	IT	NTSC	63	750	350	0.01	1.0	350	430	WDIP016-G-0500B	C1
		MW3747MFH	681	582	IT	PAL	63	600	300	0.01	1.0	420	430	WDIP016-G-0500B	C1

■ CCD Linear Image Sensors (Shrunk Type)

Type No.	Pixel Count	Max Frequency (MHz)	Applications	Remarks	Evaluation Board	Package	No.
MN3610	2,048	5.0	Facsimile	High-sensitivity, Low dark output type	BS-814	WDIP022-G-0470	C10
MN3610H	2,048	5.0	Facsimile	High-sensitivity, 5V drive	—	WDIP022-G-0470	C10
MN3611	2,160	2.0	Facsimile	High-sensitivity, 5V drive	—	WDIP022-G-0470	C10
MN3611RE	R.G.B ×720 2,160	2.0	Color scanner	High-sensitivity, Low dark output type	—	WDIP022-G-0470	C10
MN3615	2,592	5.0	Facsimile	High-sensitivity, Low dark output type	BS-814	WDIP022-G-0470	C10
MN3644D	2,048	1.5	Bar-code reader	Clock driver built-in	BS-809	WDIP022-G-0450	C11
MN3646	2,880	2.0	Bar-code reader	Full 5V drive	—	WDIP022-G-0470	C10
MN3662	3,648	2.0	Image scanner	High-resolution type	—	WDIP022-G-0450	C11
MN3664	5,000	14.0	Image scanner, Copier	High-speed, High-resolution type	BS-803	WDIP022-C-0400	C12
MN3665A	10,000	6.0	Image scanner	High-speed, High-resolution type	BS-808	WDIP022-C-0400D	C13
MN3666A	7,500	10.0	Image scanner, Copier	High-speed, High-resolution type	BS-808	WDIP022-C-0400D	C13
MN3671RE	R, B = 1,024 G = 2,048	3.0	Color image scanner	RGB on-chip color filter Line memories built-in	BS-811	WDIP022-G-0450	C11
MN3672	R, G, B ×5,000	—	Color image scanner	RGB on-chip color filter 3 lines neighboring structure	—	WDIP040-C-0400	C14
MN3673RE	R, G, B ×2,592	5.0	Color image scanner	RGB on-chip color filter short line-interval	BS-815	WDIP022-C-0400B	C15
MN3674	R, B = 512 G = 1,024	3.0	Color image scanner	RGB on-chip color filter Line memories built-in: 5V drive	—	WDIP022-G-0470B	C16
MN3675	R, B = 1,024 G = 2,048	3.0	Color image scanner	RGB on-chip color filter Line memories built-in: 5V drive	—	WDIP022-G-0470B	C16
MN3676	R, G, B ×2,700	3.0	Color image scanner	RGB on-chip color filter 6V line interval, 5V drive	—	WDIP022-G-0470B	C16

■ CCD Camera Modules

Category	Type No.	TV System	CCD	Synchro-nization Method	External Synchro-nization	Resolutions (TV Scan Lines) Horizontal	Resolutions (TV Scan Lines) Vertical	S/N typ dB	ALC	Supply Voltage (V)	Current Consumption (mA)	Mount/ Lens	Size (mm)	PC Board Outline Drawing	PC Control
Color camera module	BS7510R*2	NTSC	6mm size 512H	Internal sync.	—	330	350	46	Electronic iris Normal flickerless galvano	12 ±1.0	200	CS mount ※1 standard lens	42 × 42 ×2 pieces	C19	Possible
	BS7510														
	BS7520	PAL					420								
	BS7330	NTSC					350						60 × 65 ×2 pieces 39.6 × 38.6	C18	—
	BS7340	PAL					420								
	BS7311	NTSC	6mm size 768H			470	350				220				—
	BS7321	PAL					420								
B/W camera module	BS7259	EIA	6mm size 512H	Internal sync.	—	330	350	47	Electronic iris	9 ±1.0	120		32 ×32	C17	—
	BS7269	CCIR					420								
	BS72591	EIA		Automatic switching internal sync. And external sync.	VD		350				140				
	BS72691	CCIR					420								
	BS72592	EIA			C · SYNC		350								
	BS72692	CCIR					420								
	BS7211	EIA	6mm size 768H	Internal sync.	—	550	350								
	BS7221	CCIR					420								

※1 Standard lens ※2 Adoption of mirror image CCD

1) f = 3.7mm, F4.5 (Pin hole: applied to the monochrome camera module only) 2) f = 2.9mm, F2.0 3) f = 3.8mm, F2.0 4) f = 6.0mm, F2.5

Note) In case the lens integrated type is necessary, ask us for the concerned information material.

Polysilicon TFT Liquid Crystal Panel

● TFT Color LCD Panels

Type No.	Effective Screen Size (mm)	Pixel Count (Pixel)	Display Method	Display Color	Drive Method	Contrast	Pixel Arrange-ment	H/D Driver Supply Voltage (V)	Total Panel Power Consumption (mW)	Trans-mit-tance (%)	Horizontal Resolution (TV Scan Lines)	Application and Function	Package
MCL0512 (EVF)	1.3cm (0.5 type) 9.09mm(H) × 6.9mm(V)	505 Pixel (H) × 230 Pixel (V)	Transmi-ssion TN liquid crystal, normally white	Full color	TFT driver built-in active matrix	1:200	RGB delta	14.0 ±0.5	120mW max	2.3%	230	Video camera, electronic still camera	C20
MCL1331 (VPS)	3.3cm (1.3 type) 26.24mm(H) × 19.68mm(V)	640 Pixel (H) × 480 Pixel (V)	Transmi-ssion TN liquid crystal, normally white	Mono-chrome	TFT driver built-in active matrix	1:200	RGB Square	14.0 ±0.5		12.5%		Projector	C21

● Timing Control CMOS LSIs

Category	Type No.	Operating Voltage (V)	Process	Function	Package	No.
LCD drive timing control	MN83803A	Signal generator stage 4.5 to 5.5 LCD drive stage 16.0 to 20.0 (MAX 20V)	CMOS	100 thousand LCD display controller, Common to EVF and VPS Built-in backlighting controller Compatible with both NTSC and PAL TV systems	QFH048-P-0707 (0.5mm pitch)	L51

● Signal Processing Bipolar ICs

Category	Type No.	Operating Voltage (V)	Process	Function	Package	No.
EVF circuit VPS circuit	AN2523FAP	V_{CC1} 4.5 to 5.1 V_{CC2} 11.7 to 15.3	Bipolar	TFT color LCD panel YUV input Signal processing	QFH032-P-0707A	B92
	AN5372S	4.2 to 5.2		TFT color LCD panel Compatible with both NTSC and PAL TV systems Low voltage, video and chroma processing	SOP028-P-0375A	B82
	AN2527NFHP	V_{CC1} 4.5 to 5.1 V_{CC2} 11.7 to 15.3		TFT color LCD panel Compatible with both NTSC and PAL TV systems Image signal processing compatible with CPS/CPN	QFH048-P-0707A	B101

(Package Symbol) QFH = Quad Flat High Package, SOP = Small Outline Package (PANAFLAT PACKAGE)

■ Image Signal Processor

Category	Type No.	Process	Function	Package	No.
DPU	MN8355	CMOS	Display processor unit (DPU)	QFP084-P-1818	L72
EDPU	MN8510		High performance display processor unit (EDPU)	QFP124-P-2828	L80
HTP	MN8357		Half tone processor LSI for light-shade image 2-value conversion	QFP084-P-1818	L72
HTP	MN8354		For half tone processor ASIC	QFP084-P-1818	L72
HHTP	MN8361A		High-speed light-dark image 2-value conversion LSI (Half tone processor)	QFP084-P-1818	L72

■ A/D, D/A Converters for Image Signal Processing

Category	Type No.	Process	Operating Voltage (V)	Function	Package	No.
A/D converter	MN6550B/S	CMOS	5	Resolution 7 bits, Conversion rate 15MSPS	DIP022-P-0400 SOP022-P-0375	L13/L37
	MN65531AS		5	Resolution 6 bits, Conversion rate 20MSPS, Clamp multiplexer built-in	SOP022-P-0375	L37
	▲MN65742		5	Resolution 6 bits ×2, Conversion rate 60MSPS	SOP028-P-0375	L40
	MN65543S		5	Resolution 8 bits, Conversion rate 15MSPS	SOP024-P-0375	L38
	MN655431SH		5.0/3.5	Resolution 8 bits, Conversion rate 15MSPS	SSOP024-P-0300	L39
	▲MN65751F		4.75/3.0	Resolution 8 bits, Conversion rate 30MSPS	TQFP032-P-0707	L45
	MN65752H		3.6/2.6	Resolution 8 bits ×2, Conversion rate 20MSPS	QFH048-P-0707	L51
	MN6576H		5.0/3.3	Resolution 9 bits, Conversion rate 16MSPS	QFH032-P-0707	L44
	MN65761T		3.6/2.6	Resolution 9 bits, Conversion rate 18MSPS	TQFP048-P-0707	L53
	MN6577H		3.0	Resolution 10 bits, Conversion rate 15MSPS	QFH048-P-0707	L51
	MN6577F		3.0	Resolution 10 bits, Conversion rate 15MSPS	TQFP048-P-0707	L53
	MN65771F		5.0/3.3	Resolution 10 bits, Conversion rate 18MSPS	QFH048-P-0707	L51
D/A converter	MN65523A/S	NMOS	5	Resolution 6 bits, Conversion rate 20MSPS	DIP016-P-0300C SOP022-P-0375	L9/L37
	MN6556A/S	CMOS	5	Resolution 8 bits, Conversion rate 20MSPS	DIP022-P-0400 SOP022-P-0375	L13/L37
	MN6557A/S		5	Resolution 10 bits, Conversion rate 30MSPS	DIP022-P-0400 SOP022-P-0375	L13/L37
	MN6559S		5	Resolution 6 bits ×3, Conversion rate 20MSPS	SOP028-P-0375	L40
	MN6570F		5	Resolution 8 bits ×3, Conversion rate 35MSPS	QFP044-P-1010	L50
	MN6570TF		5	Resolution 8 bits ×3, Conversion rate 40MSPS	QFP044-P-1010	L50
	MN6570EF		5	Resolution 8 bits ×3, Conversion rate 40MSPS	QFP044-P-1010	L50
	MN65701FHP		5	Resolution 8 bits ×3, Conversion rate 35MSPS	QFH048-P-0707	L51
	MN657011H		3.5	Resolution 8 bits ×3, Conversion rate 20MSPS	QFH048-P-0707	L51
	MN65702H		4.8/3.3	Resolution 8 bits ×3, Conversion rate 20MSPS, LPF, SYNC circuit built-in	QFH048-P-0707	L51
	MN657021F		3.0	Resolution 8 bits ×3, Conversion rate 27MSPS, SYNC circuit built-in	TQFP048-P-0707	L53
	MN65703T		5.0/3.1	Resolution 8 bits ×3, Conversion rate 20MSPS, LPF, SYNC circuit built-in	TQFP048-P-0707	L53
	MN6571K		5	Resolution 8 bits ×3, Conversion rate 31.5MSPS, Interpolation filter built-in	SDIP028-P-0400	L20

▲ Under development

(Package Symbol) DIP = Dual-In-Line Package, QFH = Quad Flat High Package, QFP = Quad Flat Package, SDIP = Shrunk Dual-In-line Package, SOP = Small Outline Package (PANAFLAT PACKAGE), SSOP = Shrunk Small Outline Package, TQFP = Thin Quad Flat Package

■ CCD Delay Line Series (1)

Category		Type No.	System	Stages	Clock Frequency	Band width (−3dB) / Comb Depth	Input Signal Amplitude	Clock Driver	Supply Voltage/ Power Consumption	Composition			Package	No.
											Clock Multiplier	Auto-bias clamp		
NMOS	Quasi-single power supply 5V, (6V)	MN3803S	NTSC	452	4fsc	6.0MHz	400mVp-p	built-in	5V 150mW 6V 0.01mW	0.5H	—	—	SOP018-P-0300	L34
NMOS	Supply voltage 9V	MN8037S	PAL	282	fsc	1.9MHz	400mVp-p	built-in	9V 125mW	1H	—	—	SOP008-P-0225	L29
NMOS	Supply voltage 9V	MN8038	SECAM	280	fsc	1.9MHz	400mVp-p	built-in	9V 125mW	1H	—	—	DIP008-P-0300	L1
NMOS	Supply voltage 9V	MN8036/S	NTSC	112	fsc → 1/2fsc	0.7MHz	400mVp-p	built-in	9V 45mW	1H	—	—	DIP008-P-0300 SOP008-P-0225	L1 L29
NMOS	Supply voltage 9V	MN8033S	PAL	140	fsc → 1/2fsc	0.9MHz	400mVp-p	built-in	9V 60mW	1H	—	—	SOP008-P-0225	L29
NMOS	Supply voltage 12V	MN3104	Clock driver for CCD delay line MN8028A						12V 680mW				HDIP014-P -0300F	L6
CMOS	Low EMI Low clock noise Supply voltage 5V, 9V	MN3814/S	NTSC	906	4fsc	5.5MHz	500mVp-p	built-in	5V 130mW 9V 90mW	1H	—	○	DIP008-P-0300 SOP018-P-0300	L1 L34
CMOS	Low EMI Low clock noise Supply voltage 5V, 9V	MN3830S	NTSC	454	2fsc	3.0MHz	500mVp-p	built-in	5V 45mW 9V 45mW	1H	○ (×2)	○	SOP016-P-0225	L32
CMOS	Low EMI Low clock noise Supply voltage 5V single	MN3858S	NTSC	454	2fsc	3.0MHz	500mVp-p	built-in	4.9V 70mW	1H	—	○	SOP008-P-0225	L29
CMOS	Low EMI Low clock noise Supply voltage 5V single	MN3859S	PAL	566.5	2fsc	3.5MHz	500mVp-p	built-in	4.9V 90mW	1H	—	○	SOP008-P-0225	L29
CMOS	Low EMI Low clock noise Supply voltage 5V single	MN3866S	NTSC	681 ×2 or 606 ×2 (Switchable)	fsc →3fsc or 9.54MHz (Switchable)	4.2MHz or 3.7MHz	500mVp-p	built-in	4.9V 165mW	1H 1H	○ (×3)	○	SOP020-P-0300	L35
CMOS	Low EMI Low clock noise Supply voltage 5V single	MN38662S	NTSC	681 ×2 or 605 ×2 (Switchable)	fsc →3fsc or 9.535MHz (Switchable)	4.2MHz or 3.7MHz	500mVp-p	built-in	4.8V 160mW	1H 1H	○ (×3)	○	SOP020-P-0300	L35
CMOS	Low EMI Low clock noise Supply voltage 5V single	MN38663S	NTSC	680.5 ×2 or 605 ×2 (Switchable)	fsc →3fsc or 9.545MHz (Switchable)	4.2MHz or 3.7MHz	500mVp-p	built-in	4.4V 130mW	1H 1H	○ (×3)	○	SOP020-P-0300	L35
CMOS	Low EMI Low clock noise Supply voltage 5V single	MN38664S	NTSC	679, 680.5 or 605 ×2 (Switchable)	fsc →3fsc or 9.545MHz (Switchable)	4.2MHz or 3.7MHz	500mVp-p	built-in	4.4V 130mW	1H 1H	○ (×3)	○	SOP020-P-0300	L35
CMOS	Low EMI Low clock noise Supply voltage 5V single	MN3867S	PAL	848.5 1700 or 617 ×2	fsc →3fsc or 9.656MHz (Switchable)	6.0MHz or 3.7MHz	500mVp-p	built-in	5.0V 300mW	1H 2H or 1H 1H	○ (×3)	○	SOP020-P-0300C	L43
CMOS	Low EMI Low clock noise Supply voltage 5V single	MN3870S	NTSC	DL:908 COM: 910	fsc →4fsc	DL: 5.5MHz / COM: −35dB	500mVp-p	built-in	5.0V 270mW	1HDL 1H COM	○ (×4)	○	SOP020-P-0300C	L43

(Package Symbol) DIP = Dual-In-Line Package, HDIP = Heat-sink Dual-In-Line Plastic Package, SOP = Small Outline Package (PANAFLAT PACKAGE)

■ CCD Delay Line Series (1) (continued)

Category		Type No.	System	Stages	Clock Frequency	Band width (−3dB) / Comb Depth	Input Signal Amplitude	Clock Driver	Supply Voltage/ Power Consumption	Composition	Clock Multiplier	Auto -bias clamp	Package	No.
CMOS	Low EMI Low clock noise Supply voltage 5V single	MN3880S	NTSC	454 ×2	2fsc	2.8MHz	500mVp-p	built-in	5.0V 90mW	1H 1H	—	○	SOP016-P-0225	L32
		MN3881S	PAL	566.5 567	2fsc	3.0MHz	500mVp-p	built-in	5.0V 100mW	1H 2H	—	○	SOP016-P-0225	L32
		MN3882S	4.43 Multi PAL	566.5, 567 or 566.5 ×2 (Switch by SW)	2fsc	3.0MHz	500mVp-p	built-in	5.0V 100mW	1H 2H or 1H 1H	—	○	SOP016-P-0225	L32
		MN3883S	Full multi PAL	566.5, 567 or 566.5 ×2 or 454 ×2 (Switch by SW)	2fsc	3.0MHz	500mVp-p	built-in	5.0V 100mW	1H 2H or 1H 1H	—	○	SOP016-P-0225	L32

■ CCD Delay Line Series (2) (For Video Camera)

Category		Type No.	System	Stages	Clock Frequency	Band width (−3dB)	Input Signal Amplitude	Clock Driver	Supply Voltage/ Power Consumption	Composition	Auto-bias clamp	Image Sensor	Package	No.
NMOS	420H CCD video camera	MN3804YS	NTSC-Y	504.5	7.95MHz	3.5MHz	400mVp-p	built-in	5V 70mW 9V 60mW	1H	○	MN3734	SOP008-P-0225	L29
		MN3804CS	NTSC-C	504.5	7.95MHz	1.5MHz	400mVp-p	built-in	5V 70mW 9V 60mW	1H	○		SOP008-P-0225	L29
		MN3805YS	PAL-Y	514.5	8.05MHz	3.5MHz	400mVp-p	built-in	5V 70mW 9V 60mW	1H	○	MN3740	SOP008-P-0225	L29
		MN3805CS	PAL-C	514.5	8.05MHz	1.5MHz	400mVp-p	built-in	5V 70mW 9V 60mW	1H	○		SOP008-P-0225	L29
CMOS	670H CCD video camera	MN3822S	NTSC-C	201.5 ×3	12.7MHz → 3.18MHz	1.2MHz	400mVp-p	built-in	5V 55mW 8.5V 65mW	1H 1H 1H	○	MN3717 MN3737 MN3751	SOP016-P-0225	L32
	710H CCD video camera	MN3825S	NTSC-Y	857	13.5MHz	5.2MHz	400mVp-p	built-in	4.8V 110mW 8.5V 60mW	1H	○	MN3752	SOP016-P-0225	L32
		MN3826S	NTSC-C	285.5 ×3	13.5MHz → 4.5MHz	1.6MHz	400mVp-p	built-in	4.8V 50mV 8.5V 85mW	1H 1H 1H	○		SOP016-P-0225	L32
●5V Single														
CMOS	510H CCD video camera. Supply voltage 5V single	MN3860SA	NTSC-C	201.5 ×3	9.54MHz → 3.18MHz	1.2MHz	400mVp-p	built-in	4.8V 50mW	1H 1H 1H	○	MN3715 MN3735 MN3739	SSOP016-P-0225	L33

(Package Symbol) SOP = Small Outline Package (PANAFLAT PACKAGE), SSOP = Shrunk Small Outline Package

■ BBDs for Audio Signal Delay

Type No.		Application Effects					Stages	Max Delay Time (ms)	Package	
		Vibrato	Echo	Reverb	Playback Speed Variable Tape Recorder	Ambience				No.
General-use (V_{DD} = −15V)	MN3003	●					64 ※	6.4	DIP014-P-0300A	L4
	MN3004		●		●		512	25.6	DIP014-P-0300A	L4
	MN3005		●				4096	204.8	DIP014-P-0300C	L2
	MN3006	●				●	128	6.4	DIP008-P-0300	L1
	MN3007		●				1024	51.2	DIP008-P-0300	L1
	MN3008		●				2048	102.4	DIP014-P-0300C	L2
	MN3009	●				●	256	12.8	DIP008-P-0300	L1
	MN3010				●		512 ※	51.2	DIP014-P-0300A	L4
	MN3011		●	●			3328 (6 tap)	19.8 to 166.4	Special DIP018-P -0300D	L3
	MN3012					●	3, 5, 190	0.15/0.25/9.5	DIP014-P-0300A	L4
	MN3101	Clock generator / Driver							DIP008-P-0300	L1
Low voltage (V_{DD} = +5V)	MN3204		●		●		512	25.6	DIP008-P-0300	L1
	MN3205		●				4096	204.8	DIP014-P-0300C	L2
	MN3206	●				●	128	6.4	DIP008-P-0300	L1
	MN3207		●				1024	51.2	DIP008-P-0300	L1
	MN3208		●				2048	102.4	DIP014-P-0300C	L2
	MN3209	●				●	256	12.8	DIP008-P-0300	L1
	MN3210				●		512 ※	51.2	DIP014-P-0300A	L4
	MN3214		●	●			1024 (5 tap)	51.2	DIP014-P-0300A	L4
	MN3102	Clock generator / Driver							DIP008-P-0300	L1
Ultra low voltage (V_{DD} = +3V)	MN3304		●		●		512	25.6	DIP008-P-0300	L1
	MN3305		●				4096	204.8	DIP014-P-0300C	L2
	MN3306	●				●	128	6.4	DIP008-P-0300	L1
	MN3307		●				1024	51.2	DIP008-P-0300	L1
	MN3308		●				2048	102.4	DIP008-P-0300	L1
	MN3309	●				●	256	12.8	DIP008-P-0300	L1
	MN3105	Clock generator							DIP008-P-0300	L1

※ Because of dual type, stages are doubled in series connection. ●mark in the application effects column is only a guide.

■ Other MOS LSIs

Category	Type No.	Function	Package	No.
Driver	MN6280	1/1, 1/4, 1/5, 1/20 driver	DIP008-P-0300	L1
Filter	MN6516	SCF system low pass filter	DIP018-P-0300A	L10

(Package Symbol) DIP = Dual-In-Line Package

■ Driver Arrays

Type No.	Function	Input Resistor (Ω)	Output Breakdown Voltage $V_{CE(SUS)}$ (V)	Output Current (mA)	Output Clamp Diode	Numbers of Circuits	Package	No.
DN8650	"L" input active driver (Emitter common)	LSTTL Compatible	35	500	No	7	DIP016-P-0300D	B38
DN8690	Darlington driver (Emitter common)	8k + Diode	60	1.5A	Yes	4	DIP016-P-0300D	B38
DN8695	Darlington driver (Emitter common)	LSTTL Compatible	50	1.5A	No	9	HZIP023-P-0138	B32

■ Hall ICs

Applications	Type No.	Function	Package	No.
Switch/sensor	▲DN8796/MS	Alternative magnetic field operation, Operating voltage (V_{CC} = 2.7 to 14.4V), with pull-up resistor	SSIP003-P-0000A Mini Type · 3 pins	B5 —
	▲DN8797/MS	One way magnetic field operation, Operating voltage (V_{CC} = 2.7 to 14.4V), with pull-up resistor	SSIP003-P-0000A Mini Type · 3 pins	B5 —
	▲DN8798/MS	Alternative magnetic field operation, Operating voltage (V_{CC} = 2.7 to 14.4V), Open collector	SSIP003-P-0000A Mini Type · 3 pins	B5 —
	▲DN8799/MS	One way magnetic field operation, Operating voltage (V_{CC} = 2.7 to 14.4V), Open collector	SSIP003-P-0000A Mini Type · 3 pins	B5 —
	DN6851	Alternative magnetic field operation, Operating voltage (V_{CC} = 3.6 to 16.0V), with pull-up resistor	SSIP003-P-0000A	B5
	DN6844S		ESOP004-P-0200	B59
	DN6852	One way magnetic field operation, Operating voltage (V_{CC} = 3.6 to 16.0V), Open collector	SSIP003-P-0000A	B5
	DN6845S		ESOP004-P-0200	B59
	DN6853	Alternative magnetic field operation, Operating voltage (V_{CC} = 3.6 to 16.0V), Open collector	SSIP003-P-0000A	B5
	DN6846S		ESOP004-P-0200	B59
	DN6847/S/SE	Alternative magnetic field operation, Operating voltage (V_{CC} = 4.5 to 16.0V), with pull-up resistor	SSIP003-P-0000A ESOP004-P-0200 SSIP003-P-0000C	B5 B59 B7
	DN6848/S/SE	One way magnetic field operation, Operating voltage (V_{CC} = 4.5 to 16.0V), Open collector	SSIP003-P-0000A ESOP004-P-0200 SSIP003-P-0000C	B5 B59 B7
	DN6849/S/SE	Alternative magnetic field operation, Operating voltage (V_{CC} = 4.5 to 16.0V), Open collector	SSIP003-P-0000A ESOP004-P-0200 SSIP003-P-0000C	B5 B59 B7
	DN8897/S/SE	Zero cross, Operating voltage (V_{CC} = 4.5 to 16.0V), with pull-up resistor	SSIP003-P-0000A ESOP004-P-0200 SSIP003-P-0000C	B5 B59 B7
	DN8899/S/SE	Zero cross, Operating voltage (V_{CC} = 4.5 to 16.0V), Open collector	SSIP003-P-0000A ESOP004-P-0200 SSIP003-P-0000C	B5 B59 B7
	DN8899UAS	Zero cross, Operating voltage (max = 135 ℃), Open collector	ESOP004-P-0200	B59

▲ Under development

■ Prescalers

Applications	Type No.	Output		Package	No.	Remarks
		Frequency deviding Ratio	Output Format			
1GHz high-speed prescaler	DN8506S	1/128, 1/136	ECL	SOP008-P-0225A	B60	Pulse swallow type Low current consumption
1.7GHz high-speed prescaler	DN8522S	1/64, 1/128, 1/256	ECL	SOP008-P-0225A	B60	Fixed freq. divider
2.7GHz high-speed prescaler	AN8523S	1/64, 1/128, 1/256	ECL	SOP008-P-0225A	B60	Fixed freq. divider

(Package Symbol) DIP = Dual-In-Line Package, ESOP = Enlarged Small Outline Package, HZIP = Heat-sink Zigzag-In-Line Plastic Package, SOP = Small Outline Package (PANAFLAT PACKAGE), SSIP = Shrunk Single-In-Line Package

■ Analog Master Slice

● Line-ups

Name of series	Supply voltage	Device characteristics						Remarks
		NPN Transistors			PNP Transistors			
		f_T,max	BV_{CEO}	h_{FE}	f_T,max	BV_{CEO}	h_{FE}	
AN9DX00	≦12V	2.6GHz	14.4V	100 to 250	1.0GHz	14.4V	66 to 200	
AN9CX00	≦5V	1.0GHz	7V	80 to 250	500MHz	7V	80 to 250	
AN9AX00	≦30V	200MHz	36V	125 to 400	6MHz	36V	125 to 500	

● AN9DX00 Series

Type No.			AN9DA00	AN9DB00	AN9DC00	*AN9DD00	AN9DE00	Remarks
No. of pads			28	36	55	75	64	
Total number of elements			1287	2424	3854	6602	5106	
No. of transistors			306	600	920	1610	1288	
	NPN	A11			320	560	448	Basic size
		A21			160	280	224	2 times size
		A62P	8	8				62 times size
		B11	126	252				Basic size (with surrounded CW)
	PNP	LA1	84	168				Basic size (lateral)
		LA4S	4	4				8 times size (lateral)
		V11	84	168	320	560	448	Basic size (vertical)
		V21			120	210	168	2 times size (vertical)
No. of resistors			969	1800	2854	4852	3706	
	SP	5k	474	888	1408	2440	1728	
		10k	198	336	480	800	640	
	SP2	2.5k	291	576	966	1612	1338	Resistance variable
No. of capacitors		5p	12	24	80	140	112	

*: Under development

● AN9CX00 Series

Type No.			*AN9CA00	AN9CB00	Remarks
No. of pads			40	52	
Total number of elements			2370	4248	
No. of transistors			432	768	
	NPN	N11	216	384	Basic size
	PNP	P11	216	384	Basic size (vertical)
No. of resistors			1866	3352	
	PW	10k	360	640	
		20k	324	576	
		50k	48	64	
	SP	2k	684	1216	Resistance variable
		4k	90	168	Resistance variable
		5k	360	688	Resistance variable
No. of capacitors		5p	72	128	

*: Under development

● AN9AX00 Series

Type No.			AN9AA00	Remarks
No. of pads			28	
Total number of elements			844	
No. of transistors			188	
	NPN	W11	96	Basic size
		W62P	10	62 times size
	PNP	LA1	80	Basic size (lateral)
		LA10	2	10 times size (lateral)
No. of diodes			9	
	ZD	6.4V	9	Zener diode
No. of resistors			652	
	SP	2k	608	Resistance variable
	SQ	50k	40	
	Epitaxial	100k	4	
No. of capacitors			4	
		10p	2	
		15p	2	

● Package List

Name of series		AN9DX00 Series					AN9CX00 Series		AN9AX00 Series
Name of master		AN9DA00	AN9DB00	AN9DC00	AN9DD00	AN9DE00	AN9CA00	AN9CB00	AN9AA00
Package	No. of pins								
DIP	16	○							
	18	○							
	20	○	○						
	22	○	○						
	24	○							
	28	○	○	○		○			○
SDIP	20	○							
	22	○							
	24	○	○						○
	28			○		○	○		
	42		○	○					○
	52			○		○			
SO	18	○	○						
	20	○	○						
	22	○	○						○
	24	○	○						○
	28	○	○	○		○	○		○
QFP	32	○	○				○		○
	44		○	○			○	○	○
	48		○	○	○	○	○	○	○
	64		○	○	○	○		○	○
	80			○	○			○	
	84				○			○	

■ Operational Amplifier Series (V_{CC} = 15V, V_{EE} = −15V)

Category		Functions	Type No.	Package		Operating Power Supply Voltage Range		Power Consumption max (mW)	Input Offset Voltage max (mV)	Input Offset Current max (nA)	Input Bias Current max (nA)	Output Voltage min (V)	Slew Rate typ (V/μs)	Noise Voltage Converted to Input typ (μVrms)
					No.	(V)	(V)							
Single power supply	General-use	Dual	AN6561	SIP009-P-0000C	B17	±1.5 to ±15	3 to 30	6	7*1	50*1	250*1	V_{CC} -1.5*1	0.3*1	6.0*1
			AN6561L	SIP009-P-0000D	B18			6						
			AN1358 (AN6562)	DIP008-P-0300B	B35			6						
			AN1358S (AN6562S)	SOP008-P-0225A	B60			6						
		Quad	AN1324 (AN6564)	DIP014-P-0300D	B37			10						
			AN1324NS (AN6564NS)	SOP014-P-0225A	B63			10						
	High output	Dual	AN6567	SIP009-P-0000D	B18	±1.5 to ± 7.5	3 to 15	35*1	5*1	100*1	500*1	3.3*1 (V_{CC} = 5V)	1.0*1	—
			AN6568	DIP008-P-0300B	B35									
			AN6568S	SOP008-P-0225A	B60									
	Reference voltage built-in	Single	AN6500	DIP008-P-0300B	B35	±1.5 to ±12	3 to 24	20*1	7*1	300*1	500*1	3.5*1 (V_{CC} = 5V)	0.6*1	—
			AN6500S	SOP008-P-0225A	B60									
			AN6501	SIP007-P-0000	B14									

*1 V_{CC} = 5V, V_{EE} = 0V, *2 V_{CC} = 2.5V, V_{EE} = −2.5V Note) Type No. in ( ) is same chip. Only type No. is different.
(Package Symbol) DIP = Dual-In-Line Package, SIP = Single-In-Line Plastic Package, SOP = Small Outline Package (PANAFLAT PACKAGE)

■ Operational Amplifier Series (V_{CC} = 15V, V_{EE} = −15V) (continued)

Category		Functions	Type No.	Package		Operating Power Supply Voltage Range		Power Consumption max (mW)	Input Offset Voltage max (mV)	Input Offset Current max (nA)	Input Bias Current max (nA)	Output Voltage min (V)	Slew Rate typ (V/μs)	Noise Voltage Converted to Input typ (μVrms)
					No.	(V)	(V)							
2-power supplies	Audio	Dual	AN6550	SIP009-P-0000C	B17	±2 to ±12	4 to 24	15	6*2	200*2	500*2	±1*2	0.8*2	2.5*2
			AN6551			±4 to ±15	8 to 30	170	6	200	500	±10	1.0	2.5
			AN6555					170	6		500	±10	2.0	1.5
			AN6557	SIP009-P-0000D	B18			240	3		—	±10	6.0	0.9
			AN4558 (AN6552)	DIP008-P-0300B	B35	±4 to ±15	8 to 30	170	6		500	±10	1.0	2.5
			AN6553					170	6		500	±10	2.0	2.5
			AN6556					170	6		500	±10	2.0	1.5
			AN6558					240	3		—	±10	6.0	0.9
			AN4558S (AN6552S)	SOP008-P-0225A	B60	±4 to ±15	8 to 30	170	6		500	±10	1.0	2.5
			AN6556S					170	6		500	±10	2.0	1.5
			AN6558S					240	3		—	±10	6.0	0.9
		Quad	AN6554	DIP014-P-0300C	B36	±2 to ±15	4 to 30	240	5	50	300	±10	1.6	2.5
			AN6554NS	SOP014-P-0225A	B63	±2 to ±15	4 to 30	240	5	50	300	±10	1.6	2.5
	General-use	Single	AN6573	SIP007-P-0000	B14	±2 to ±15	4 to 30	85	4	100	250	±10	0.7	4.0
			AN1741 (AN6570)	DIP008-P-0300B	B35			85						
			AN1741S (AN6570S)	SOP008-P-0225A	B60			85						
		Dual	AN6571	SIP009-P-0000D	B18			170						
			AN1458 (AN6572)	DIP008-P-0300B	B35			170						
			AN1458S (AN6572S)	SOP008-P-0225A	B60			170						
High input impedance (FET input)		Single	AN6583	SIP007-P-0000	B14	±5 to ±15	10 to 30	85	10	0.2	0.4	±10	11	4.0
			AN1081	DIP008-P-0300B	B35			85						
			AN1081S	SOP008-P-0225A	B60			85						
		Dual	AN6581	SIP009-P-0000D	B18			170						
			AN1082	DIP008-P-0300B	B35			170						
			AN1082S	SOP008-P-0225A	B60			170						
		Quad	AN1084	DIP014-P-0300D	B37			340						
			AN1084S	SOP018-P-0300A	B68									
Low power consumptibilion		Single	AN6593	SIP009-P-0000D	B18	±1 to ±18	2 to 36	3	6	20	75	±10	0.2	6.0
			AN4250	DIP008-P-0300B	B35									
			AN4250S	SOP008-P-0225A	B60									
		Dual	AN6592	DIP008-P-0300B	B35			7	5	80	250		0.5	4.0
			AN6592S	SOP008-P-0225A	B60									

*1 V_{CC} = 5V, V_{EE} = 0V, *2 V_{CC} = 2.5V, V_{EE} = −2.5V Note) Type No. in ( ) is same chip. Only type No. is different.
(Package Symbol) DIP = Dual-In-Line Package, SIP = Single-In-Line Plastic Package, SOP = Small Outline Package (PANAFLAT PACKAGE)

■ Compatibility Table of Op Amps.

Category			Panasonic	NEC	Shin Nihon Musen	Toshiba	Hitachi	Mitsubishi	Rohm	Sanyo	T.I	N.S	Motorola	Package	No.
Single power supply	General-us	Dual	AN6561		NJM2904S	TA75358S		M6223L	BA10368N	LA6358NS				SIP009-P-0000C	B17
			AN1358 (AN6562)	μPC358C μPC1251C	NJM2904D	TA75358P	HA17904PS HA173688	M6223P	BA10358 BA728	LA6358N	LM358P LM2904P	LM358N LM2904N	LM358P	DIP008-P-0300B	B35
			AN1358S (AN6562S)	μPC358G μPC1251G	NJM2904M	TA75358F		M6223FP	BA10358F BA728F	LA6358NM	LM2904PS		LM358D	SOP008-P-0225A	B60
		Quad	AN1324 (AN6564)	μPC324C μPC451C	NJM324D NJM2902N	TA75324P TA75902P	HA17902PS	M6224P	BA10324 BA6924	LA6324N	LM324N LM2902N	LM324N LM2902N	LM324N	DIP014-P-0300D	B37
			AN1324NS (AN6564NS)	μPC324G μPC451G	NJM324M NJM2904M	TA75902F	HA17324F	M6224PP		LA6324NM	LM324NS LM2902NS		LM324D	SOP014-P-0225A	B63
2-power supplies	Audio	Dual	AN6551		NJM4558S	TA75558S		M5218L	BA715	LA6458S				SIP009-P-0000C	B17
			AN4558 (AN6552)	μPC258C μPC4558C	NJM4558D	TA75558P	HA17558PS	M5218P	BA4558	LA6458D	RC4558P		MC4558OP1	DIP008-P-0300B	B35
			AN4558S (AN6552S)	μPC258G μPC4558G	NJM4558M	TA75558F	HA17558F	M5218FP	BA4558S	LA6458M	RC4558PS		MC4558OD	SOP008-P-0225A	B60
			AN6553	μPC4559C	NJM4559D	TA75559P								DIP008-P-0300B	B35
			AN6555		NJM4559S	TA75559S								SIP009-P-0000C	B17
			AN6556	μPC4559C	NJM4559D	TA75559P					TL4558A			DIP008-P-0300B	B35
			AN6556S		NJM4559M	TA75559F								SOP008-P-0225A	B60
			AN6557		NJM2043S			M5220L						SIP009-P-0000C	B17
			AN6558		NJM2043D			M5220P						DIP008-P-0300B	B35
			AN6558S		NJM2043M			M5220FP						SOP008-P-0225A	B60
		Quad	AN6554	μPC458C μPC4741C	NJM2058D NJM2059D	TA7508P		M5228P			RC4136	LM4741	MC4741OP	DIP014-P-0300C	B36
			AN6554NS	μPC458G μPC4741G	NJM2058M NJM2059M	TA7508F		M5228FP					MC4741OD	SOP014-P-0225A	B63
	General-use	Single	AN6573			TA7504S								SIP007-P-0000	B14
			AN1741 (AN6570)	μPC151C μPC741C	NJM741D	TA7504P	HA17741PS				μA741OP	LM741ON	MC1741OP1	DIP008-P-0300B	B35
			AN1741S (AN6570S)	μPC151G μPC741G	NJM741M								MC1741OD	SOP008-P-0225A	B60
		Dual	AN6571			TA75458S								SIP009-P-0000C	B17
			AN1458 (AN6572)	μPC251C μPC1458C	NJM1458D	TA75458P	HA17458PS				MC1458N	LM1458N	MC1458OP1	DIP008-P-0300B	B35
			AN1458S	μPC251G μPC1458G	NJM1458M	TA75458F							MC1458OD	SOP008-P-0225A	B60
Bi-FET	Single		AN6583											SIP007-P-0000	B14
			AN1081	μPC801C μPC4081C			HA17080PS				TL081OP		TL081OP	DIP008-P-0300B	B35
			AN1081S	μPC801G μPC4081G									TL081OD	SOP008-P-0225A	B60
	Dual		AN6581		NJM082S			M5221L						SIP009-P-0000C	B17
			AN1082	μPC803C μPC4082C	NJM082D		HA17082PS	M5221P	BA082		TL082OP		TL082OP	DIP008-P-0300B	B35
			AN1082S	μPC803G μPC4082G	NJM082M			M5221FP			TL082OPS		TL082OD	SOP008-P-0225A	B60
	Quad		AN1084	μPC804C μPC4084C	NJM084D		HA17084P				TL084ON		TL084ON	DIP014-P-0300C	B36
			AN1084S	μPC804G μPC4084G	NJM084M						TL084ONS		TL084OD	SOP008-P-0225A	B60
Low power consumption	Single		AN6593									LM4250ON		SIP009-P-0000C	B17
			AN4250	μPC4250C μPC802C	NJM4250D	TA7540P								DIP008-P-0300B	B35
			AN4250S	μPC4250G μPC802G	NJM4250M									SOP008-P-0225A	B60
	Dual		AN6592/S											DIP008-P-0300B SOP008-P-0225A	B35 B60

Note) Type No. in ( ) is same chip. Only type No. is different.
(Package Symbol) DIP = Dual-In-Line Package, SIP = Single-In-Line Plastic Package, SOP = Small Outline Package (PANAFLAT PACKAGE)

■ Comparator Series (V_{CC} = 5V)

Category	Functions	Type No.	Package	No.	Operating Power Supply Voltage Range (V)	Operating Power Supply Voltage Range (V)	Power Supply Current max (mA)	Input Offset Voltage max (mV)	Input Offset Current max (nA)	Input Bias Current max (nA)	Output Current min (mA)	Response Time typ (μs)
High speed	Single	AN1311	DIP008-P-0300B	B35	±2.5 to ±18	5 to 36	7.5	7.5	50	250	70	0.12
		AN1311S	SOP008-P-0225A	B60								
	Dual	AN1319	DIP014-P-0300C	B36	±5 to ±18	5 to 18	12.5	8	200	1000	30	0.08
		AN1319S	SOP014-P-0225A	B63								
General-use	Dual	AN1393(AN6914)	DIP008-P-0300B	B35	±1 to ±18	2 to 36	1.5	5	50	250	10	1.3
		AN1393S(AN6914S)	SOP008-P-0225A	B60							10	
		AN6914UBS	SOP008-P-0225A	B60							10	
		AN6913	SIP009-P-0000C	B17							10	
		AN6913L	SIP009-P-0000D	B18							10	
	Quad	AN1339(AN6912N)	DIP014-P-0300C	B36			2.0				10	
		AN1339S	SOP014-P-0225A	B63							10	
		AN6912	DIP014-P-0300C	B36							6	
		AN6912S	SOP014-P-0225A	B63							6	
High current	Dual	AN6915	SIP009-P-0000C	B17	±1 to ±18	2 to 36	5.3	5	50	200	70	2
		AN6916	DIP008-P-0300B	B35			5.3					
		AN6916S	SOP008-P-0225A	B60			5.3					
	Quad	AN6918	DIP014-P-0300C	B36			10.0					

■ Compatibility Table of Comparators

Category \ Maker	Panasonic	NEC	Shin Nihon Musen	Toshiba	Hitachi	Mitsubishi	Rohm	Sanyo	T.I	N.S	Package	No.
Single	AN1311	μPC311C μPC271C	NJM311D						LM311P	LM311N	DIP008-P-0300B	B35
	AN1311S	μPC311G μPC271G	NJM311M								SOP008-P-0225A	B60
Dual	AN1319	μPC319C μPC271C	NJM319							LM319N	DIP014-P-0300C	B36
	AN1319S	μPC272G									SOP014-P-0225A	B63
	AN6913		NJM2903S	TA75393S		M5233L	BA10393N	LA6393S			SIP009-P-0000C	B17
	AN1393 (AN6914)	μPC393C μPC277C	NJM2903D	TA75393P	HA17393	M5233P	BA10393	LA6393D	LM393P LM2903	LM393N LM2903	DIP008-P-0300B	B35
	AN1393S (AN6914S)	μPC393G μPC277G	NJM2903M	TA75393F	HA17393F	M5233FP	BA10393F	LA6393M			SOP008-P-0225A	B60
	AN6914UBS										SOP008-P-0225A	B60
	AN6915		NJM2403S			M51207L					SIP009-P-0000C	B17
	AN6916		NJM2403D								DIP008-P-0300B	B35
	AN6916S										SOP008-P-0225A	B60
Quad	AN6912	μPC177	NJM2901D	TA75339P	HA17901P HA17339P	M5234P	BA10339	LA6339D	LM339N	LM339N LM2901	DIP014-P-0300C	B36
	AN6912S	μPC177G	NJM2901M	TA75339F	HA17901F HA17339F	M5234FP	BA10339F	LA6339M			SOP014-P-0225A	B63
	AN1339 (AN6912N)	μPC339C	NJM2901D	TA75339P	HA17901P HA17339P	M5234P	BA10339	LA6339D	LM339N	LM339N LM2901	DIP014-P-0300C	B36
	AN1339S	μPC339G	NJM2901M	TA75339F	HA17901F HA17339F	M5234FP	BA10339F	LA6339M			SOP014-P-0225A	B63
	AN6918					M51209L					DIP014-P-0300C	B36

Note) Type No. in ( ) is same chip. Only type No. is different.

■ Voltage Regulator Series

● 3-Pin Low-Drop Positive Output (AN7700/AN7700F/AN77L00/AN77L00M Series)

Output Current	Output Voltage (V)														
	3	3.5	4	4.5	5	6	7	8	9	10	12	15	18	20	24
1A	AN7703/F	—	AN7704/F	—	AN7705/F	AN7706/F	AN7707/F	AN7708/F	AN7709/F	AN7710/F	AN7712/F	AN7715/F	AN7718/N	AN7720/F	AN7724/F
0.1A	AN77L03/M	AN77L035/M	AN77L04/M	AN77L045/M	AN77L05/M	AN77L06/M	AN77L07/M	AN77L08/M	AN77L09/M	AN77L10/M	AN77L12/M	—	—	—	—

AN7700/F Series: V_{DIF} = 0.5V, I_{Bias} = 2.6mA, RR = 70dB (AN7705)
AN77L00/M Series: V_{DIF} = 0.22V, I_{Bias} = 1.5mA, RR = 60dB (AN77L03)
Package: AN7700 Series = HSIP003-P-0000 (TO-220) (No.B1), AN7700F Series = HSIP003-P-0000A (TO-220F) (No.B2), AN77L00 Series = SSIP003-P-0000 (TO-92) (No.B4), AN77L00M Series = HSIP003-P-0000B (TO-243) (No.B3)

● 3-Pin Low-Drop Positive Output (AN8000/AN8000M Series)

Output Current	Output Voltage (V)												
	2	2.5	3	3.5	4	4.5	5	6	7	8	8.5	9	10
50mA	AN8002/M	AN8025/M	AN8003/M	AN8035/M	AN8004/M	AN8045/M	AN8005/M	AN8006/M	AN8007/M	AN8008/M	AN8085/M	AN8009/M	AN8010/M

V_{DIF} = 0.3V I_{Bias} = 0.6mA RR = 60dB Package: AN8000 Series = SSIP003-P-0000 (TO-92) (No.B4), AN8000M Series = HSIP003-P-0000B (TO-243) (No.B3)

● 3-Pin Positive Output (AN7800/AN7800F/AN78M00/AN78M00F/AN78N00/AN78L00/AN78L00M Series)

Output Current	Output Voltage (V)											
	4	5	6	7	8	9	10	12	15	18	20	24
1A	—	AN7805/F	AN7806/F	AN7807/F	AN7808/F	AN7809/F	AN7810/F	AN7812/F	AN7815/F	AN7818/F	AN7820/F	AN7824/F
0.5A	—	AN78M05/F	AN78M06/F	AN78M07/F	AN78M08/F	AN78M09/F	AN78M10/F	AN78M12/F	AN78M15/F	AN78M18/F	AN78M20/F	AN78M24/F
0.3A	AN78N04	AN78N05	AN78N06	AN78N07	AN78N08	AN78N09	AN78N10	AN78N12	AN78N15	AN78N18	AN78N20	AN78N24
0.1A	AN78L04/M	AN78L05/M	AN78L06/M	AN78L07/M	AN78L08/M	AN78L09/M	AN78L10/M	AN78L12/M	AN78L15/M	AN78L18/M	AN78L20/M	AN78L24/M

Package: AN7800/AN78M00 Series = HSIP003-P-0000 (TO-220) (No.B1), AN7800F/AN78M00F Series = HSIP003-P-0000A (TO-220F) (No.B2), AN78N00 Series = SSIP003-P-0000E (TO-126) (No.B8), AN78L00 Series = SSIP003-P-0000 (TO-92) (No.B4), AN78L00M Series = HSIP003-P-0000B (TO-243) (No.B3)

● 3-Pin Negative Output (AN7900T/AN7900F/AN79M00/79M00F/AN79N00/AN79L00 Series)

Output Current	Output Voltage (V)											
	−4	−5	−6	−7	−8	−9	−10	−12	−15	−18	−20	−24
1A	—	AN7905T/F	AN7906T/F	AN7907T/F	AN7908T/F	AN7909T/F	AN7910T/F	AN7912T/F	AN7915T/F	AN7918T/F	AN7920T/F	AN7924T/F
0.5A	—	AN79M05/F	AN79M06/F	AN79M07/F	AN79M08/F	AN79M09/F	AN79M10/F	AN79M12/F	AN79M15/F	AN79M18/F	AN79M20/F	AN79M24/F
0.3A	AN79N04	AN79N05	AN79N06	AN79N07	AN79N08	AN79N09	AN79N10	AN79N12	AN79N15	AN79N18	AN79N20	AN79N24
0.1A	AN79L04	AN79L05/M	AN79L06	AN79L07	AN79L08/M	AN79L09/M	AN79L10	AN79L12/M	AN79L15/M	AN79L18	AN79L20	AN79L24

Note) 5.2V type is available for 0.5A type only: AN79M52/AN79M52F
Package: AN7900T/AN79M00 Series = HSIP003-P-0000 (TO-220) (No.B1), AN7900F/AN79M00F Series = HSIP003-P-0000A (TO-220F) (No.B2), AN79N00 Series = SSIP003-P-0000E (TO-126) (No.B8), AN79L00 Series = SSIP003-P-0000 (TO-92) (No.B4), AN79L00M Series = HSIP003-P-0000B (TO-243) (No.B3)

● 4-Pin with Reset Pin (AN7800R/AN78M00R Series)

Output Current (A)	Output Voltage (V)				Package	
	5	8	9	12		No.
1	AN7805R	—	AN7809R	AN7812R	SSIP004-P-0000	B9
0.5	AN78M05R	AN78M08R	AN78M09R	AN78M12R	SSIP004-P-0000	B9

(Package Symbol) HSIP = Heat-sink Single-In-Line Plastic Package, SSIP = Shrunk Single-In-Line Package

■ Voltage Regulator Series (continued)

● Other Voltage Regulators

Category	Type No.	Function	Output Voltage		Package	
			V_O (V)	I_O (mA)		No.
Shunt	AN1431T/M	Variable positive output	2.5 to 36	1 to 100	SSIP003-P-0000 HSIP003-P-0000B	B4 B3
4-pin	AN6530	Variable positive output	5 to 30	0.5	HDIP006-P-0300	B34
	AN6531				SSIP004-P-0000	B9
	AN6535	Variable negative output	−5 to −30	0.5	SSIP004-P-0000	B9
	AN6540	Rise variable	8.5	0.25	SSIP004-P-0000	B9
3-pin	AN6541	Positive output low drop	9	300	HSIP003-P-0000	B1
	AN6545/SP		5	150	SSIP004-P-0000B HSIP005-P-0000	B11 B12
	AN8064SP		4	150	HSIP005-P-0000	B12
	AN8066SP		6	150	HSIP005-P-0000	B12
With reset pin	AN8060/S	Negative output low drop	−3.9	30	DIP008-P-0300B SOP008-P-0225A	B35 B60
Multi-function	AN6546SP	Fixed/Variable 2 outputs	5V/2V to V_{IN} −1	50/75	HSIP005-P-0000	B12
	AN8062	Positive output low drop with reset pin	4	30	DIP008-P-0300B	B35
	AN8072N	Multi output, 8V ×2, 5V ×2, 10V ×1 total 5 ch.	—	—	HSIP012-P-0000	B22
	AN8079	2 outputs	5V/variable	100/variable	HSIP009-P-0000	B15
DC-DC switching power supply	AN8011S	2-ch open collecter output (Independent ON/OFF by 2-ch), Standby function, Timer latch type short circuit protection, Soft start	3.6 to 34	—	SOP016-P-0225A	B64
	AN8013SH	1-ch open collecter output, Pulse by pulse overcurrent detection, Timer latch type short circuit protection, Soft start	3.6 to 34	—	SSOP010-P-0225	B62
	AN8014S	1-ch totempole output (peak current ±1A), Pulse by pulse overcurrent detection, Timer latch type short circuit protection, Standby function	3.6 to 34	—	SOP016-P-0225A	B64
	AN8015SH	1-ch open collecter output, Step-up/Step-down/inversion, Timer latch type short circuit protection, Soft start	3.6 to 34	—	SSOP010-P-0225	B62
	AN8016SH	Responds to 1.8V-operating 1-ch voltage booster circuit, Totem-pole output (Set external R for constant current), Timer latch type short circuit protection, Standby function	1.8 to 14	—	SSOP010-P-0225	B62
	AN8041S	LCD back light inverter control IC, MOS FET direct driver (peak current ±500mA)	3.6 to 34	—	SOP016-P-0225A	B64
	AN8081NK	2-ch open collecter output (1-ch for fixed output of 5V), Reset output, Timer latch type short circuit protection, Soft start	3.6 to 34	—	SDIP022-P-0300A	B48
	AN8083S	1-ch totempole output (4.8V fixed output), Standby function, Timer latch type short circuit protection, Soft start, Reset output, Low voltage detection	1.1 to 12	—	SOP016-P-0225A	B64
	AN8086S	1-ch totempole output (3.6V fixed output), Standby function, Timer latch type short circuit protection, Soft start, Reset output, Low voltage detecting	1.1 to 12	—	SOP016-P-0225A	B64
AC-DC switching power supply	AN8091/S	MOS FET direct drive (peak current ±2A), Overcurrent detection, (Pulse by pulse +timer protection +VF control) Remote function, Over-voltage protection	31	—	DIP016-P-0300D SOP020-P-0300C	B38 B70
	AN8092/S	MOS FET direct drive (peak current ±2A), Overcurrent detection (pulse by pulse +timer protection +VF control), Remote function, Over-voltage protection (resettable by pin)	31	—	DIP016-P-0300D SOP020-P-0300C	B38 B70

(Package Symbol) DIP = Dual-In-line Package, HDIP = Heat-sink Dual-In-line Plastic Package, HSIP = Heat-sink Single-In-line Plastic Package, SDIP = Shrunk Dual-In-line Package, SOP = Small Outline Package (PANAFLAT PACKAGE), SSIP = Shrunk Single-In-line Package, SSOP = Shrunk Small Outline Package

■ Voltage Regulator Series (continued)

● Other Voltage Regulators (continued)

Category	Type No.	Function	Output Voltage		Package	
			V_O (V)	I_O (mA)		No.
AC-DC switching power supply	AN8021L/SB	MOS FET direct drive (peak current ±1A), Overcurrent detection (pulse by pulse +timer latch protection), Overvoltage protection, Soft start, MAX duty 66% fixed	34	–	SIP009-P-0000D SSOP016-P-0225	B18 B66
	AN8022L/SB	MOS FET direct driver (peak current ±1A), Overcurrent detection (pulse by pulse +timer latch protection), Overvoltage protection, Soft start, MAX duty 44% fixed	34	–	SIP009-P-0000D SSOP016-P-0225	B18 B66
	AN8026	RCC switching power supply (frequency control), MOS FET direct drive (peak current ±1A), Overcurrent detection (+ detection), Overvoltage protection (resettable by pins)	34	–	SIP009-P-0000C	B17
	AN8028	RCC switching power supply (frequency control), MOS FET direct drive (peak current ±1A), Overcurrent detection (− detection), Overvoltage protection (with timer latch)	34	–	SIP009-P-0000C	B17
	AN8029	RCC switching power supply (frequency control), MOS FET direct drive (peak current ±1A), Overcurrent detection (+ detection), Overvoltage protection (with timer latch)	34	–	SIP009-P-0000C	B17
	AN8031	For active filter use	V_{CC} Stop voltage to 34	–	SIP009-P-0000C	B17
	AN8032	For active filter use, Compatible with the safety standard (of short-circuit test)	V_{CC} Stop voltage to 34	–	SIP009-P-0000C	B17

■ Transistor Arrays

● AN90B00/S Series (V_{CE} = 24V, I_C = 25mA)

(Note) Pin numbers in □ show those of SO Package.

Equivalent Circuits

AN90B01S : 5 Circuits (SOP016-P-0225A)

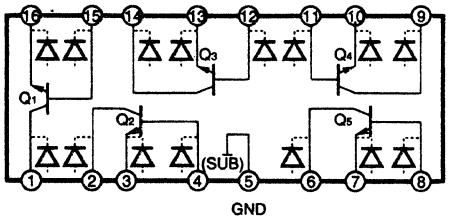

AN90B10 : 8 Circuits (DIP018-P-0300D)

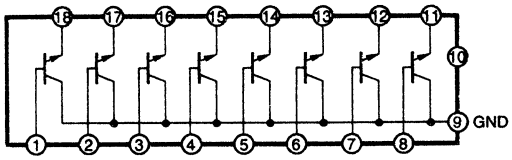

AN90B20 : 8 Circuits (DIP018-P-0300D)
AN90B20S : 7 Circuits (SOP016-P-0225A)

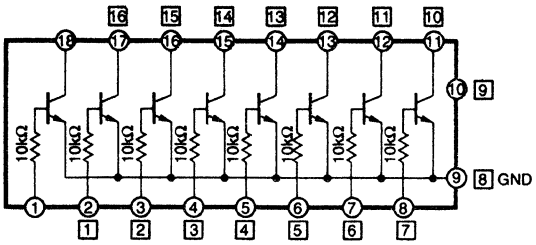

AN90B21 : 8 Circuits (DIP018-P-0300D)
AN90B21S : 7 Circuits (SOP016-P-0225A)

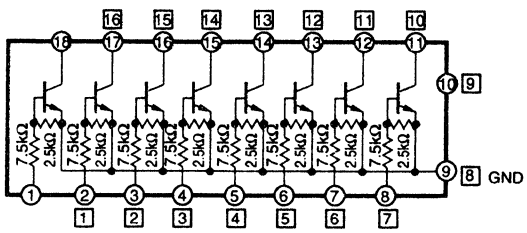

(Package No.) DIP018-P-0300D = No. B41, SOP016-P-0225A = No. B64

(Package Symbol) DIP = Dual-In-line Package, SIP = Single-In-Line Plastic Package, SOP = Small Outline Package (PANAFLAT PACKAGE), SSOP = Shrunk Small Outline Package

● AN90B00/S Series (continued) (V_{CE} = 24V, I_C = 25mA)

(Note) Pin numbers in □ show those of SO Package.

Equivalent Circuits

AN90B22 : 8 Circuits (DIP018-P-0300D)
AN90B22S : 7 Circuits (SOP016-P-0225A)

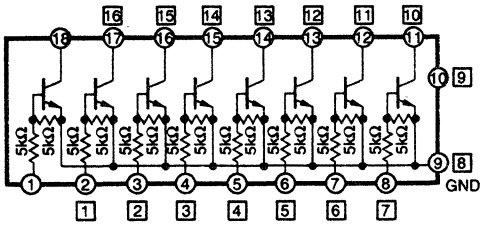

AN90B60 : 8 Circuits (DIP018-P-0300D)
AN90B60S : 7 Circuits (SOP016-P-0225A)

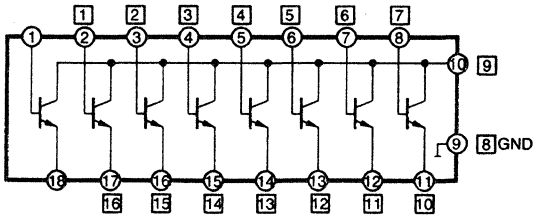

AN90B70 : 8 Circuits (DIP018-P-0300D)
AN90B70S : 7 Circuits (SOP016-P-0225A)

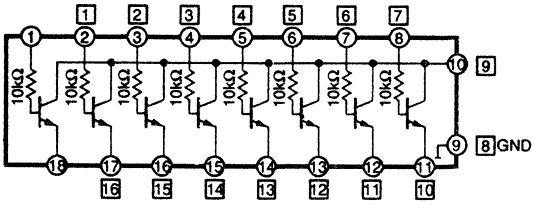

AN90B81 : 8 Circuits (DIP018-P-0300D)
AN90B81S : 7 Circuits (SOP016-P-0225A)

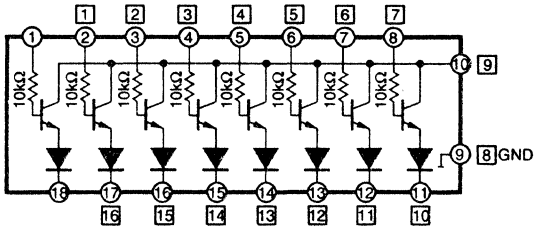

AN90B82S : 6 Circuits (SOP016-P-0225A)

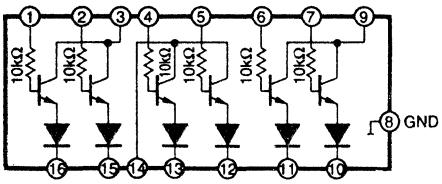

● AN90C00 Series (V_{CED} = 24V, I_C = 50mA)

Equivalent Circuits

AN90C10 : 4 Circuits (SIP009-P-0000C)

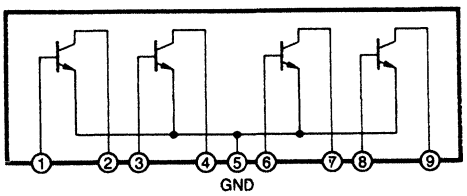

AN90C21 : 4 Circuits (SIP009-P-0000C)

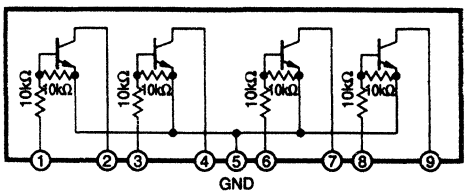

AN90C22 : 4 Circuits (SIP009-P-0000C)

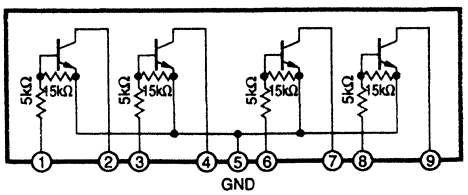

AN90C23 : 4 Circuits (SIP009-P-0000C)

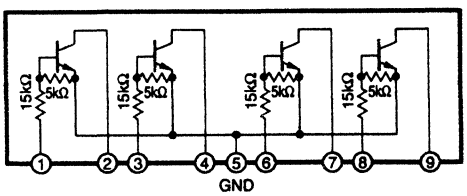

(PackageNo.) SIP009-P-0000C = No. B17
(Package Symbol) DIP = Dual-In-Line Package, SOP = Small Outline Package (PANAFLAT PACKAGE), SIP = Single-In-Line Plastic Package

■ Application of Motor Driver ICs

			Type	Package	Feature
Brushless motor		Digital speed control	AN8210NK AN8214S	SDIP024-P-0550 SSOP036-P-0450A	· 9V to 16V Three-phase full wave quasi-PLL
			AN8245K	SDIP024-P-0550	· 22V PLL Three-phase full wave
		Current control and overlap control	AN3816SCR	HSOP028-P-0450A	· Two sensors Three-phase full wave
			AN3826NK	SDIP028-P-0400B	· Built-in torque ripple canceler
			AN3834K AN3840SR AN3841SR AN3890FBS AN8293SC AN8294S/SR AN8482SB AN8294NSB AN8481SB	SDIP024-P-0550 HSOP024-P-0450 HSOP024-P-0450 QFH036-P-0710 HSOP024-P-0300A HSOP024-P-0450A HSOP024-P-0450 HSOP042-P-0400 HSOP042-P-0400 HSOP042-P-0400	· With a saturation control circuit
		Current control	AN8261	DIP018-P-0300D	· Large fan use
		PWM drive	AN8290NS	SOP024-P-0375	· Built-in thermal protection
		Sensor-less	AN3813K AN3814K AN3815K	SDIP018-P-0550 SDIP018-P-0550 SDIP018-P-0550	· Three-phase half wave · Built-in thermal protection
			AN8225FB AN8224SA AN3861SA	QFP042-P-1010B SSONF-36D SSOP032-P-0300	· Three-phase full wave HDD use · 3V to 5.5V · 3V to 5.5V
		Fan motor	AN8267S	SOP016-P-0300	· Built-in automatic reset
Stepping motor		Stepping	AN8253NS AN8254S AN8201S AN8202S AN8208S	SOP018-P-0300A SOP016-P-0300 SOP018-P-0300A SOP018-P-0300A SOP018-P-0300A	· PNP NPN Complementary full bridge
Voice coil motor		Voice coil motor	AN8410SA	SSOP032-P-0300	· 3V to 5.5V HDD use
Brush motor	With speed controller / One way drive	Electronic governor	AN6659S AN6612 AN6612S	SOP010-P-0225A DIP008-P-0300B SOP008-P-0225A	· 1V to 3.6V · 1.8V to 8V With external power TR
			AN6650 AN6650S	DIP008-P-0300B SOP008-P-0225A	· 1.8V to 7V Built-in power TR
			AN6651	SSIP004-P-0000B	· 3.5V to 14.4V
			AN6652	SSIP004-P-0000B	· 6V to 20V
		Digital FG control	AN8235S	SOP016-P-0225A	· Adjustment - free variable speed control
	Forwarding/ reversing drive	Forwarding/ reversing electronic governor	AN6655S	SOP016-P-0225A	· 1V to 3.6V dual speeds
			AN6656S	SOP016-P-0225A	· 1.8V to 6V 2- speed
			AN6657 AN6657S	DIP016-P-0300F SOP016-P-0225A	· 45V to 14V 2- speed
			AN6607NS	SOP016-P-0300	· 8V to 16V 3- speed
			AN6608 AN6609N AN6609NS	HDIP016-P-0300 HDIP016-P-0300 HSOP024-P-0450A	· 8V to 16V 3- speed · 8V to 16V 3-speed
Without speed controller	One way drive	Multiple channels	DN86XX series		· Driver array
	Forwarding/ reversing drive	Single-channel forwarding/reversing motor driver	AN6663S AN6663SP AN6660 AN6660K	SOP008-P-0225A HSIP005-P-0000 HSIP009-P-0000 HSIP009-P-0000A	· Forwardig/reversing by 2bit braking, stop control
		Two-channel forwarding/ reversing motor driver	AN6662	SIP010-P-0000	· 3-bit control
			AN6664S AN6666S AN6668NS	SOP016-P-0300 SOP028-P-0375B SOP018-P-0300A	· Forwardig/reversing by 2 bit braking, stop control
			AN8387S AN8817SB	SOP020-P-0300C HSOP042-P-0400	· Linear drive
		Three-channel forwarding/ reversing motor driver	AN8377N AN8818SB	HDIP016-P-0300 HSOP042-P-0400	· Linear drive
		Four-channel forwarding/ reversing motor driver	AN6665S	SOP020-P-0300B	· 2-bit control
			AN8730SB AN8780SB AN8781SB AN8782SB AN8783SB AN8813SB AN8816SB	SSOP028-P-0375A HSOP042-P-0400 HSOP042-P-0400 HSOP042-P-0400 HSOP042-P-0400 HSOP042-P-0400 HSOP042-P-0400	· Linear drive

■ Motor Control Series

Category	Type No.	Operating Voltage (V)	Peak Current / Regular Current	Functions	Applications	Package	No.
Hall motor driver	AN3816SCR	5 ±0.5	1.5A 100mA	2-sensor 3-phase full wave drive, Output pin damping electrolytic capacitor unnecessary, PG, FG amp. built-in, PG/FG 3-state value output, Current limiter built-in, Thermal protection circuit built-in	VTR cylinder motor control/drive	HSOP028-P-0450A	B80
	AN3826NK	5 ±0.5	1.5A 100mA	3-phase full wave drive, Overlap drive, Upper side output Tr of PNP ×3 externally put, Forward/reverse rotation possible, Torque ripple cancel circuit built-in, Hall element power supply built-in, Switching power supply control output pin attached, Current limiter built-in, Thermal protection circuit built-in	VTR capstan motor control/drive	SDIP028-P-0400B	B53
	AN3834K AN3834S	3 to 18 (V_M) 5 ±0.5	1.5A 100mA	3-phase full wave drive, Output Tr built-in, Low offset, Forward/reverse rotation possible, Overlap drive, Torque ripple cancel circuit built-in, Switching power supply control output pin attached, Current limiter built-in, Thermal protection circuit built-in	VTR reel motor control/drive	SDIP024-P-0550 HSOP024-P-0450A	B51 B75
	AN3840SR	5 ±0.5	1.5A 100mA	3-phase full wave drive, Output Tr built-in, Output pin electrolytic capacitor unnecessary, Forward/reverse rotation possible, Overlap drive, Torque ripple cancel circuit built-in, Switching power supply control output pin attached, Power supply limiter built-in, Thermal protection circuit built-in	VTR capstan motor control/drive	HSOP024-P-0450	B74
	AN3841SR	5 ±0.5	1.5A 100mA	3-phase full wave drive, Output Tr built-in, Output pin electrolytic capacitor unnecessary, Forward/reverse rotation possible, Overlap drive, Torque ripple cancel circuit built-in, Switching power supply control output pin attached, Power supply limiter built-in, Thermal protection circuit built-in	VTR capstan motor control/drive	HSOP024-P-0450	B74
	AN3890FBS	5 ±0.5	–	3-phase full wave drive, External output Tr, Output pin electrolytic capacitor no use, Forward/reverse rotation possible, Overlap drive, Torque ripple cancel circuit built-in, SW power supply control comparator, Pre-drive output built-in, Saturation prevention circuit built-in	VTR capstan/cylinder motor control/drive	QFH036-P-0710	B94
	AN3891FBP	4.5 to 5.5	–	3-phase full wave drive, External output Tr, Output pin electrolytic capacitor, Forward/reverse rotation possible, Overlap drive FG Amp. built-in, SW power supply circuit built-in, Short brake, Gain switchable (A/V)	Multi-laser disc player Spindle motor	QFH042-P-1010B	B95
	AN8290NS	4.5 to 20	300mA 50mA	PWM system 3-phase full wave drive, Output Tr built-in, Power down circuit built-in, Thermal protection circuit built-in	Brush-less spindle motor control/drive	SOP024-P-0375A	B76
	AN8293SA	4.25 to 5.5 3 to 14 (V_M)	700mA	3-phase full wave current drive, Soft switch (snubberless), Short brake, Current limit, Thermal protection circuit built-in	For various optical disks spimdle motor	SSOP032-P-0300	B87
	AN8293SC	4.25 to 5.5 4.5 to 14 (V_M)	1.0A	3-phase full wave current drive, Soft switch (snubberless), Short brake, Current limit, Thermal protection circuit built-in	For various optical disks spimdle motor	HSOP024-P-0300A	B73
	AN8261	4.5 to 7	–	3-phase full wave Hall motor drive, External power Tr (NPN ×3, PNP ×3), V_{CC} drop protection function built-in, Thermal protection circuit by external thermistor is possible	Air conditioner/Hot-water supply system Fan motor, Various kinds of brush-less motor	DIP018-P-0300D	B41
	AN8294S/SR	4.25 to 5.5 4.5 to 14	1.2A	3-phase full wave Hall motor drive, Soft switch (snubberless), Reversal brake, Current limit, Detection of the direction, Prevention of reversion, FG output	For various optical disks spimdle motor	HSOP024-P-0450A HSOP024-P-0450	B75 B74
	AN8482SB	4.25 to 5.5 4.5 to 14	1.2A	3-phase full wave Hall motor drive, Soft switch (snubberless), Reversal brake, Current limit, Prevention of reversion, FG output	For various optical disks spimdle motor	HSOP042-P-0400	B81
	AN8481SB	4.25 to 5.5 4.5 to 14	1.2A	3-phase full wave Hall motor drive, Soft switch (snubberless), Reversal brake, Current limit, Prevention of reversion, FG output, Switching Regulator control function	For various optical disks spimdle motor	HSOP042-P-0400	B81
	AN8294NSB	4.25 to 5.5 4.5 to 14	1.2A	3-phase full wave Hall motor drive, Soft switch (snubberless), Reversal brake, Current limit, Prevention of reversion, FG output	For various optical disks spimdle motor	HSOP042-P-0400	B81
Hall motor control driver	AN8210NK	9 to 16	900mA 100mA	3-phase full wave current drive, Output Tr built-in, Digital F/V control, Start/stop pin attached, Current limiting function, Thermal protection circuit built-in	FDD spindle motor (1 chip) (for 5″)	SDIP024-P-0550	B51
	AN8245K	10 to 14 (V_{CC1}) 16 to 22 (V_{CC2})	1.5A	3-phase full wave current drive, Output Tr built-in, Bi-direction torque control, Digital PLL, Reverse rotation detection, Stop detection, Current limitting function, Thermal protection circuit built-in	LBP polygon-mirror motor Optical disc spindle motor	SDIP024-P-0550	B51

(Package Symbol) DIP = Dual-In-Line Package, HSOP = Heat-sink Small Outline Package, QFH = Quad Flat High Package, SDIP = Shrunk Dual-In-Line Package, SOP = Small Outline Package (PANAFLAT PACKAGE), SSOP = Shrunk Small Outline Package

■ Motor Control Series (continued)

Category	Type No.	Operating Voltage (V)	Peak Current / Regular Current	Functions	Applications	Package	No.
Sensor-less motor-driver	AN3813K	5 ±0.5	1.5A 100mA	3-phase half wave drive, Output Tr built-in, PG/FG processing circuit built-in, Single phase Hall element input, Current limiter built-in, Thermal protection circuit built-in	VTR cylinder motor control/drive	SDIP018-P-0550	B43
	AN3814K	5 ±0.5	1.5A 100mA	3-phase half wave drive, Output Tr built-in, PG/FG processing circuit built-in, Single phase Hall element input, Current limiter built-in, Thermal protection circuit built-in	VTR cylinder motor control/drive	SDIP018-P-0550	B43
	AN3815K	5 ±0.5	1.8A 100mA	3-phase half wave drive, Output Tr built-in, Reduced phase switching noise by overlap drive, PG/FG processing circuit built-in, Single phase Hall element input, Switching power supply control output pin attached, Current limiter built-in, Thermal protection circuit built-in	VTR cylinder motor control/drive	SDIP018-P-0550	B43
	AN3861SA	3.0 to 5.5	1A	3-phase full wave sensorless drive, Output Tr built-in, overlap drive (quasi-sinusoidal wave drive), Short brake, Current limiter, Thermal protection circuit built-in	Movie / 8mm	SSOP032-P-0300	B87
	AN8225FB	4.5 to 5.5	1A	3-phase full wave sensorless drive, Output Tr built-in, Soft switch (snubber-less), Short brake function built-in, Current limiter, Thermal protection circuit built-in	HDD spindle motor	QFP042-P-1010B	B96
	AN8224SA	2.9 to 5.5	0.7A	3-phase full wave sensorless drive, PNP power built-in, Soft switch (snubberless), Short brake function built-in, Current limiting function, Thermal protection circuit built-in	HDD spindle motor	SSONF-36D	—
Motor speed control	AN8235S	4.4 to 6	—	Digital F/V-system speed-control, Speed change possible (suitable to 300 rpm/360 rpm, 300 rpm/600 rpm), FG amp., Error amp., Current limiting function built-in, External power PNP	FDD spindle motor(3.5″) For motor speed control	SOP016-P-0225A	B64
Bridge driver	AN6660 AN6660K	4 to 20	2000mA 600mA	By 2-bit input, 4 kinds of outputs as forward rotation, reverse rotation, brake and stop. Power supply pins are independent as one for circuit bias and another for motor drive, Diode to absorb counter electromotive force is built-in	Loading motor drive, Various kinds of DC motor drive	HSIP009-P-0000 HSIP009-P-0000A	B15 B16
	AN6662	4 to 20	1.6A 500mA	By 3-bit input, 5 kinds of outputs as forward/reverse switching of 2 motors in sequence and brake. Power supply pins are independent as one for circuit bias and another for motor drive, Diode to absorb counter electromotive force is built-in, Thermal protectrion circuit built-in	VTR loading motor drive, Various kinds of DC motor drive	SIP010-P-0000	B19
	AN6663S AN6663SP	3 to 16	200mA 150mA	By 2-bit input, 4 kinds of outputs as forward rotation, reverse rotation, brake and stop. Diode to absorb counter electromotive force is built-in, Small power package suitable for surface mounting	Video camera AF/lens drive, Optical camera lens drive, Various kinds of DC motor drive	SOP008-P-0225A HSIP005-P-0000	B60 B12
	AN6664S	3 to 16	200mA	By 2-bit input, 4 kinds of outputs as forward rotation, reverse rotation, brake and stop. Diode to absorb counter electromotive force is built-in. For 2 motors independently, above control operations possible. Diode to absorb counter electromotive force is built-in	Video camera AF/lens drive, Optical camera lens drive, Various kinds of DC motor drive	SOP016-P-0300	B65
	AN6665S	2.5 to 4.5	250mA 180mA	By 2-bit input, 4 kinds of outputs as forward rotation, reverse rotation, brake and stop. For 4 motors independently, above control operation possible. Diode to absorb counter electromotive force is built-in, Low saturation output Tr built-in	Small camera lens drive, Camera aperture, shutter drive, Various kinds of DC motor drive	SOP020-P-0300B	B69
	AN6666S	2.5 to 7	500mA	By 2-bit input, 4 kinds of outputs as forward rotation, reverse rotation, brake and stop. For 2 motors independently, above control operation possible. Diode to absorb counter electromotive force is built-in, Low saturation output Tr built-in	Camera film winding drive, Lens drive, aperture drive, Various kinds of DC motor drive	SOP028-P-0375B	B83
	AN6668NS	2 to 4	300mA	By 2-bit input, 4 kinds of outputs as forward rotation, reverse rotation, brake and stop. For 2 motors independently, above control operation possible. Separation of motor power supply from V_{CC}, Diode to absorb counter electromotive force is built-in, Low saturation output Tr built-in	Camera film winding drive, Lens drive, aperture drive, Various kinds of DC motor drive	SOP018-P-0300A	B68

(Package Symbol) HSIP = Heat-sink Single-In-Line Plastic Package, QFP = Quad Flat Package, SDIP = Shrunk Dual-In-Line Package, SIP = Single-In-line PPackage, SOP = Small Outline Package (PANAFLAT PACKAGE), SSOP = Shrunk Small Outline Package

■ Motor Control Series (continued)

Category	Type No.	Operating Voltage (V)	Peak Current / Regular Current	Functions	Applications	Package	No.
Linear driver	AN8377N	5.5 to 16	500mA 300mA	Linear drive of 2 motors/actuators possible, 5V low-drop type regulator built-in, Power supply reset output built-in	CD player motor, Actuator drive	HDIP016-P-0300	B40
	AN8387S	3 to 9	500mA 300mA	Linear drive of 2 motors/actuators possible, Drive gain is variable by external resistor, Output ON/OFF pin attached, 2 power supplies of signal system and power system are available, Output voltage limiting pin attached	CD player motor, Actuator drive	SOP020-P-0300C	B70
	AN8410SA	2.9 to 5.5	0.3A	Small crossover distortion, PNP power built-in, fewer peripheral circuits	HDD voice coil motor	SSOP032-P-0300	B87
	AN8780SB AN8781SB AN8782SB AN8783SB	4.5 to 14	500mA	Built-in 4 channels of BTL driver, Linear drive of 8 Ω motors/actuators possible, Power control function built -in, Thermal shut down circuit (with hysteresis) built-in AN8783SB has current feed back circuit	CD/CD-ROM DVD/DVD-ROM	HSOP042-P-0400	B81
	AN8813SB AN8816SB AN8817SB AN8818SB	4.5 to 14	500mA	Motor/actuator driver AN8813SB of a power OP. Amp type with a built-in dedicated-circuit for loading motor.	CD/CD-ROM DVD/DVD-ROM	HSOP042-P-0400	B81
	AN8730SB	2.7 to 5.5	500mA	Low-power 4-CH driver incorporating a switching regulator	Portable CD CD-ROM	SSOP028-P-0375A	B85
Stepping driver	AN8253NS	4.4 to 6	300mA	For stepping motor phase excitation (1 —2 excitation), With stand-by mode and hold mode, PNP-NPN complementary full bridge	FDD stepping motor drive	SOP018-P-0300A	B68
	AN8254S	4.3 to 6	110mA	For stepping motor phase excitation (1 —2 excitation), Selection of ordinary exciting mode and reduced voltage hold mode is possible, PNP-NPN complementary full bridge	FDD stepping motor drive	SOP016-P-0300	B65
	AN8201S AN8208S	4.4 to 6	300mA	For stepping motor phase excitation (1 —2 excitation), With stand-by mode function, PNP-NPN complementary full bridge	FDD stepping motor drive	SOP018-P-0300A	B68
	AN8202S	4.3 to 5.5	200mA	For stepping motor 2-phase excitation, With power supply ON/OFF pins, PNP-NPN complementary full bridge	FDD stepping motor drive	SOP018-P-0300A	B68
Fan motor driver	AN8267S	9.6 to 27.6	1.5A 500mA	DC fan-motor drive by 2-phase half wave drive, Motor lock protection, automatic recovery function built-in, Thermal protection circuit built-in	DC fan motor drive	SOP016-P-0300	B65
Electronic governor	AN6659S	1 to 3.6	1A	With built-in stable reference voltage (150mV), linear speed control is possible. Operation by low voltage until 1V, power Tr built-in	Headphone stereo, Micro cassette tape recorder	SOP010-P-0225A	B61
	AN6612 AN6612S	1.8 to 8	—	With built-in stable reference voltage (1.32V), linear speed control is possible. Operation by low voltage until 1V, External power Tr	Headphone stereo, Micro cassette tape recorder	DIP008-P-0300B SOP008-P-0225A	B35 B60
	AN6650 AN6650S AN6654S	1.8 to 7 1.8 to 3.6 1.8 to 3.6	1A	With built-in stable reference voltage (1.28V), linear speed control is possible. Starting torque, control maximum torque are large. Power Tr built-in	Headphone stereo, Micro cassette tape recorder	DIP008-P-0300B SOP008-P-0225A SOP008-P-0225A	B35 B60 B60
	AN6651	3.5 to 14.4	1A	With built-in stable reference voltage (1V), Setting range of rotation is wide. Against the applied reverse voltage, protection circuit is built-in.	Radio cassette tape recorder, Record player	SSIP004-P-0000B	B11
	AN6652	6 to 20	1A	With built-in stable reference voltage (1V), setting range of rotation is wide. Against the applied reverse voltage, protection circuit is built-in	Radio cassette tape recorder, Record player	SSIP004-P-0000B	B11

(Package Symbol) DIP = Dual-In-Line Package, HDIP = Heat-sink Dual-In-Line Plastic Package, HSOP = Heat-sink Small Outline Package, SOP = Small Outline Package (PANAFLAT PACKAGE), SSIP = Shrunk Single-In-Line Package, SSOP = Shrunk Small Outline Package

■ Morot Control Series (continued)

Category	Type No.	Operating Voltage (V)	Peak Current / Regular Current	Functions	Applications	Package	No.
Forward/ Reverse rotation electronic governor	AN6655S	1.05 to 3.6	1A	Speed control of forward/reverse rotation and FF/REW and start/stop control are possible. Operation with one dry battery. At stop time, circuit current is OFF. External power PNP Tr	Headphone stereo, Micro cassette tape recorder	SOP016-P-0225A	B64
	AN6656S	1.8 to 6	1A	Speed control of forward/reverse rotation and FF/REW and start/stop control are possible. At stop time, circuit current is OFF. External power PNP (2 pcs.)	Answering phone micro cassette tape recorder, Optical camera motor drive	SOP016-P-0225A	B64
	AN6657 AN6657S	4.5 to 9	500mA	Speed control of forward/reverse rotation and FF/REW and start/stop control are possible. At stop time, circuit current is OFF. External power PNP (1 pc.) Current limiting function built-in (less than 500mA)	Answering phone micro cassette tape recorder, Optical camera motor drive, Cassette tape recorder deck	DIP016-P-0300F SOP016-P-0225A	B39 B64
	AN6607NS	8 to 16	1.6A	By input logic, control of forward/reverse rotation, double speed governor, brake, pose, FF, REW are possible. External power NPN Tr (1 pc.)	Cassette tape recorder deck, Car cassette tape recorder, DAT, VCR, etc. Tape mechanism	SOP016-P-0300	B65
	AN6608	8 to 16	1.6A	By input logic, control of forward/reverse rotation, double speed governor, brake, pose, FF, REW are possible. Power Tr built-in	Cassette tape recorder deck, Car cassette tape recorder, DAT, VCR, etc. Tape mechanism	HDIP016-P-0300	B40
	AN6609N AN6609NS	8 to 16	1.6A	By input logic, control of forward/reverse rotation, double speed governor, brake, pose, FF, REW are possible. Power Tr built-in	Cassette tape recorder deck, Car cassette tape recorder, DAT, VCR, etc. Tape mechanism	HDIP016-P-0300 HSOP024-P-0450A	B40 B75
	AN6611S	1.05 to 3.6	1A	Mechanism control functions of headphone stereo such as forward/reverse rotation governor, FF, REW, start/stop and auto reverse, auto stop are built-in. External power PNP (2 pcs.)	Headphone stereo	SOP028-P-0375A	B82
Driver array	DN8650	4.5 to 5.5	0.5A	Buffer with 7 circuits, Output break down voltage 35V, "L" active input, 5V power supply. Direct connection possible to MOS, TTL, etc.	Actuator drive	DIP016-P-0300D	B38
	DN8680	2 to 10	1.5A	4 circuits composition, Output break down voltage 50V, "H" active input, Output clamp diode built-in. Direct connection with 6V to 15V system PMOS, CMOS is possible.	Motor drive for printer etc., Actuator drive	DIP016-P-0300D	B38
	DN8690	3.5 to 7	1.5A	4 circuits composition, Output break down voltage 60V, "L" active input, Output clamp diode built-in	Motor drive for printer etc., Actuator drive	DIP016-P-0300D	B38
	DN8695	4 to 6	1.5A	9 circuits composition, Output break down voltage 50V, "L" active input, Input is TTL compatible.	Motor drive for printer etc., Actuator drive	HZIP023-P-0138	B32

(Package Symbol) DIP = Dual-In-Line Package, HDIP = Heat-sink Dual-In-Line Plastic Package, HSOP = Heat-sink Small Outline Package, HZIP = Heat-sink Zigzag-In-Line Plastic Package, SOP = Small Outline Package (PANAFLAT PACKAGE)

■ A/D, D/A Converter Series

Parameter / Type No.	Category	Resolution (bit)	Max conversion rate (MSPS)	Operating Voltage (V)	Power consumption (mW)	Input/Output level	Package	No.
AN6855T	A/D	4	20	5, −6	170	TTL	DIP016-P-0300F	B39
AN8124K/SC	A/D +D/A	8	20	5	250	TTL	SDIP030-P-0400 SSOP032-P-0375	B54/B88
AN8122K/FAP	A/D	8	50	5	150	TTL	SDIP028-P-0400B QFH032-P-0707A	B53/B92
AN8130K/FBP	A/D	10	20	5, −5	750	TTL	SDIP042-P-0600A QFH064-P-1414	B55/B114
AN8131FBP	A/D	10	20	5	300	TTL	QFH048-P-1212	B104
AN8135	A/D	10	100	−5.2	1800	ECL	QFN068-C-S950	B123
AN8100	A/D	6	1000	−5.2	3600	ECL	CQFP-48	B106
AN8102FBP	A/D	8	125	−5.2	700	ECL	QFH064-P-1414	B114
AN8104FBP	A/D	8	125	−5.2	1120	ECL	QFH064-P-1414	B114
AN8101	A/D	8	500	−5.2	4200	ECL	QFN068-C-S950	B123
AN8140K/S	D/A	10	50	5	150	TTL	SDIP024-P-0300 SOP024-P-0375A	B50/B76
AN8146FBQ	D/A, 3-ch	10	50	5	450	TTL	QFS064-P-1414	B116

■ Others

Type No.	Operating Voltage (V)	Function	Package	No.
AN829P	8 to 16	Dual attenuator	DIP014-P-0300D	B37
AN5733	12	Dual attenuator	SIP009-P-0000C	B17
AN5905/S	12	Switching regulator control circuit	DIP018-P-0300D SOP018-P-0300A	B41/B68
AN6410	6.2 to 17	Low frequency modulator for transmission	SIP009-P-0000C	B17
AN6701S	5 to 15	Thermal sensor	SOP008-P-0225A	B60
AN6783S	5	General purpose CR oscillation long time timer	SOP008-P-0225A	B60
AN6873N/NS	16 to 24	Fluorescent tube display drive circuit	DIP018-P-0300D SOP018-P-0300A	B41/B68
AN8303S	12	4ch, LED magnetic disc head amp.	SOP014-P-0225A	B63
AN8353UB	12	For automobile dimmer	SIP009-P-0000C	B17
HH8360	—	For battery charge control	SIP-13	B26
DN8657S	4.5 to 5.5	LED panel display driver (16 bits)	SOP028-P-0375B	B83
DN8659S	4.5 to 5.5	LED panel display driver (8 bits)	SOP020-P-0300C	B70
DN8665S	4.5 to 5.5	LED panel display driver (8 bits)	SOP020-P-0300C	B70
DN8667NS	4.5 to 5.5	LED panel display driver (8 bits)	SOP020-P-0300C	B70

(Package Symbol) DIP = Dual-In-Line Package, QFH = Quad Flat High Package, QFN = Quad Flat Nonleaded Package, QFS = Quad Flat L-Leaded Small Package, SDIP = Shrunk Dual-In-Line Package, SIP = Single-In-Line Plastic Package, SOP = Small Outline Package (PANAFLAT PACKAGE), SSOP = Shrunk Small Outline Package

Dedicated IC/LSI Selection Guide

MOS Digital LSIs (MN××××)

Bipolar Linear ICs (AN××××)

Contents

■ For VCR

Category	Type No.	Operating Voltage (V)	Process	Functions	Package	No.
A/V single chip	AN3459NFBP	4.5 to 5.5	Bipolar	VHS luminance/chroma signal, Normal audio signal processing circuit, Built-in PBRFEQ, Complete adjustment-free, 3.58MHz NTSC system	QFH084-P-1818B	B121
	AN3500FBP	4.5 to 5.5		VHS luminance/chroma signal, Normal audio signal processing circuit, Built-in PBRFEQ, Complete adjustment-free, PAL 4.43MHz multi-system	QFH084-P-1818B	B121
	AN3501FBP	4.5 to 5.5		VHS brightness/chroma signal, Normal audio signal processing circuit, Built-in PBRFEQ, Complete no modulation, PAL full multi-system	QFH084-P-1818B	B121
Luminance signal processor	AN3266FAP AN3248NK	4.5 to 5.5	Bipolar	VCR luminance signal processor	QFH032-P-0707A SDIP030-P-0400	B92 B54
Chroma signal processor	AN3592K/S	5	Bipolar	PAL: Jumping correction circuit	SDIP022-P-0300A SOP022-P-0375A	B48 B72
	AN3594K	5		PAL: Jumping correction circuit	SDIP020-P-0300	B46
	AN3596FAP	5		PAL: Jumping correction circuit	QFH032-P-0707A	B92
Rec/ Playback amplifier	AN3311K/S	5	Bipolar	4-head playback amplifier	SDIP022-P-0300A SOP022-P-0375A	B48 B72
	AN3316K	5		VCR HiFi record/playback amplifier	SDIP022-P-0300A	B48
	AN3317K/SB	5		VCR HiFi record/playback amplifier	SDIP022-P-0300A SSOP028-P-0375	B48 B84
	AN3327K	5		VCR HiFi record/playback amplifier	SDIP022-P-0300A	B48
	AN3328S	5		VCR HiFi record/playback amplifier(A2)	SOP016-P-0225C	—
	AN3331K	12, 5		2-head record/playback amplifier	SDIP020-P-0300	B46
	AN3334K	12, 5		4-head record/playback amplifier	SDIP030-P-0400	B54
	AN3335NSB	12, 5		4-head record/playback amplifier with AT	SSOP036-P-0450	B89
	AN3336SB	9 to 12, 5		4-head record/playback amplifier with AT	SSOP036-P-0450A	B90
	AN3338NK/SB	12, 5		2-head record/playback amplifier with AT	SDIP022-P-0300A SSOP028-P-0375	B48 B84
	AN3339SB	9, 5		4-head record/playback amplifier with AT	SSOP036-P-0450	B89
	AN3341SC	12, 5		6-head record/playback amplifier(V6)	SSOP042-P-0450A	B91
	AN3342SC	12, 5		6-head record/playback amplifier(V6)	SSOP042-P-0450A	B91
	AN3343SC	12, 5		6-head record/playback amplifier(V6)	SSOP042-P-0450A	B91
	AN3361SB	12		4-head record/playback amplifier	SSOP036-P-0450A	B90
	AN3362K	12		2-head record/playback amplifier	SDIP022-P-0300A	B48
	AN3375S	5		2-head record/playback amplifier(V2) with AT	SOP016-P-0225C	—
	AN3363SB	5		2-head record/playback amplifier (V4)	SSOP036-P-0450	B89
	AN3364SB	5		4-head record/playback amplifier (V4)	SSOP036-P-0450	B89
	AN3366SB	5		6-head record/playback amplifier (A2,V4)	SSOP036-P-0450	B89
	AN3389SB	5		4-head record/playback amplifier with AT	SSOP036-P-0450	B89

■ For VCR (continued)

Category	Type No.	Operating Voltage (V)	Process	Functions	Package	No.
Mechanism/ servo control	MN6750326	5	CMOS	Microcomputer servo (ROM 32K byte)	QFP084-P-1818	L72
	MN6750406	5		Microcomputer servo (ROM 40K byte)	QFP084-P-1818	L72
	MN6750487	5		Microcomputer servo (ROM 48K byte)	QFP100-P-1818	L76
	MN6750566	5		Microcomputer servo (ROM 56K byte)	QFP084-P-1818	L72
	MN6750646	5		Microcomputer servo (ROM 64K byte)	QFP084-P-1818	L72
	MN67P50646	5		Microcomputer servo OTP version (ROM 64K byte)	QFP084-P-1818	L72
	MN6750647	5		Microcomputer servo (ROM 64K byte)	QFP100-P-1818	L76
	MN675039	5		Microcomputer servo (ROM 40K byte)	QFP084-P-1818	L72
	MN675049	5		Microcomputer servo (ROM 56K byte)	QFP084-P-1818	L72
	MN67P5069	5		Microcomputer servo OTP version (ROM 80K byte)	QFP084-P-1818	L72
	MN675048	5		Microcomputer servo (ROM 64K byte)	QFP100-P-1818	L76
	MN675058	5		Microcomputer servo (ROM 80K byte)	QFP100-P-1818	L76
	MN67P5068	5		Microcomputer servo (ROM 96K byte)	QFP100-P-1818	L76
	MN67P50647	5		Microcomputer servo OTP version (ROM 64K byte)	QFP100-P-1818	L76
	MN6755240	5		Microcomputer servo (ROM 24K byte)	QFP124-P-2828	L80
	MN6755320	5		Microcomputer servo (ROM 32K byte)	QFP124-P-2828	L80
	MN6755486	3 to 5		Microcomputer servo (ROM 48K byte)	QFP124-P-2828 QFP128-P-1818	L80 L82
	MN67P55646	5		Microcomputer servo OTP version (ROM 64K byte)	QFP124-P-2828 QFP128-P-1818	L80 L82
	▲MN675567	5		Microcomputer servo (ROM 72K byte)	QFP100-P-1818	L76
	▲MN675556	5		Microcomputer servo (ROM 56K byte)	QFP100-P-1818	L76
	MN67P5577	5		Microcomputer servo OTP version (ROM 80K byte)	QFP100-P-1818	L76
	MN6748	5		Single chip digital servo (High precision analog function built-in)	SDIP028-P-0400	L20
	MN67492	5		Single chip digital servo	SDIP028-P-0400	L20
	MN1020705	5		Built-in ATF 16-bit microcomputer (ROM 56K byte)	QFP128-P-1818	L82
	MN102P0705	5		Built-in ATF 16-bit microcomputer servo OTP version (ROM 56K byte)	QFP128-P-1818	L82
Motor driver	AN3813K	4.5 to 5.5	Bipolar	VCR cylinder motor drive circuit	SDIP018-P-0550	B43
	AN3814K	4.5 to 5.5		VCR cylinder motor drive circuit	SDIP018-P-0550	B43
	AN3815K	4.5 to 5.5		VCR cylinder motor drive circuit	SDIP018-P-0550	B43
	AN3816SCR	4.5 to 5.5		VCR cylinder motor drive circuit	HSOP028-P-0450A	B80
	AN3826NK	4.5 to 5.5		VCR capstan motor drive circuit	SDIP028-P-0400B	B53
	AN3830K	4.5 to 5.5		Reel DD motor drive circuit	SDIP024-P-0550	B57
	AN3834K	4.5 to 5.5		VCR reel motor drive circuit	SDIP024-P-0550	B51
	AN3840SR	4.5 to 5.5		VCR capstan motor drive circuit	HSOP024-P-0450	B74

▲Under development

■ For VCR (continued)

Category	Type No.	Operating Voltage (V)	Process	Functions	Package	No.
Motor driver (continued)	AN3841SR	4.5 to 5.5	Bipolar	VCR capstan motor drive circuit	HSOP024-P-0450	B74
	AN3890FBS	4.5 to 5.5		VCR capstan motor drive circuit	QFH036-P-0710	B94
	AN6609N/NS	8 to 16		DC motor forward/reverse 2-speed electronic governor	HDIP016-P-0300 HSOP024-P-0450A	B40 B75
	AN6660/K	4 to 20		Forward/reverse motor drive circuit	HSIP009-P-0000 HSIP009-P-0000A	B15 B16
	AN6662	4 to 20		Forward/reverse loading motor drive circuit	SIP010-P-0000	B19
Sound signal processor	AN3316K	4.5 to 5.5	Bipolar	Record/playback amp. circuit for VCR with Hi-Fi audio	SDIP022-P-0300A	B48
	AN3920K	5		RF amp. circuit for FM audio	SDIP020-P-0300	B46
	AN3922NK/NS	5		FM audio modulator demodulation circuit	SDIP020-P-0300 SOP020-P-0300B	B46 B69
	AN3932S	4.5 to 5.5		FM signal processing circuit for VCR with FM audio	SSOP032-P-0375	B88
	AN3934K	9.6 to 14.4		Audio output switch for VCR with FM audio	SDIP024-P-0300	B50
	AN3952FBP	$V_{CC1}=5$ $V_{CC2}=9$		HiFi-VCR audio signal processing circuit	QFH064-P-1414	B114
	AN3962FB	$V_{CC1}=5$ $V_{CC2}=8$ to 12		HiFi-VCR audio signal processing circuit (NTSC)	QFP048-P-1212A	B109
	AN3964FB	$V_{CC1}=5$ $V_{CC2}=8$ to 12		HiFi-VCR audio signal processing circuit (NTSC/PAL)	QFP048-P-1212A	B109
	AN3969K	5		HiFi-VCR electronic volume	SDIP022-P-0300A	B48
	AN3965FBP	$V_{CC1}=5$ $V_{CC2}=8$ to 12		HiFi-VCR audio signal processing circuit (NTSC/PAL)	QFH048-P-1212	B104
	AN3972FB/FC	7.5 to 12.5		HiFi-VCR FM-audio peak noise reduction and output switch over	QFP048-P-1212 QFP048-P-1414	B108 B110
	AN3991NS	4 to 9		Audio recording/playback amplifier circuit or normal VCR	SOP020-P-0300B	B69
	AN6297S	5		Noise reduction circuit for FM/PCM audio	SOP020-P-0300B	B69
	AN6298NK/NS	12		Peak noise reduction circuit	SDIP028-P-0400B SOP028-P-0375A	B53 B82
	AN6391NS	5		FM audio recording/playback circuit	SOP028-P-0375A	B82
Others	MN6280	5	CMOS	Clock signal generator circuit	DIP008-P-0300	L1
	AN3296/S	4.5 to 5.5	Bipolar	Sync. separation and AFC circuit, Hor/vert sync. sep., AFC, 0.5H killer	DIP016-P-0300F SOP016-P-0225A	B39 B64
	AN3297	5		Hor/vert sync. sepa., AFC, 0.5H killer	DIP018-P-0300D	B41
	AN3370K	10.5 to 12.5		Flying erase circuit	SSIP010-P-0000	B20
	AN3398	4.5 to 5.0		VCR, S-VHS detection circuit	SIP009-P-0000C	B17
	AN3399S	5		VCR, S-VHS detection circuit	SOP016-P-0225A	B64
	AN3495K/S	4.5 to 5.5		YNR for VCR, CNR circuit (NTSC/PAL)	SDIP030-P-0400 SSOP032-P-0375	B54 B88
	AN3497SB	4.5 to 5.5		Chroma noise reduction circuit for VCR (NTSC/PAL)	SSOP016-P-0225	B66
	AN3580SB	4.8		Video output with characters insertion interface	SSOP016-P-0225	B66
	AN3581S	5		Video output with characters insertion interface	SOP022-P-0375A	B72
	AN3582S	5		Video output with characters insertion interface	SOP024-P-0375A	B76
	AN3582SH	5		Video output with characters insertion interface	SSOP024-P-0300A	B77
	AN3584SH	5		Video output with characters insertion interface	SSOP024-P-0300A	B77
	AN6308/S	5		Analog switch circuit	DIP008-P-0300B SOP008-P-0225A	B35 B60
	AN8356S	2.2 to 3.5		Bar code scanner circuit for VCR	SOP016-P-0225A	B64

ICs/LSIs for VCR, Camera

■ For 8mm VCR

Category	Type No.	Operating Voltage (V)	Process	Functions	Package	No.
Video signal processor	AN6366NK/NS	5	Bipolar	Chroma signal processing circuit	SDIP022-P-0300A SOP022-P-0375A	B48 B72
	AN2490FHP	4.8		Luminance, chroma signal processing (For NTSC)	QFH064-P-1010A	B112
	AN2491FHP	4.8		Luminance, chroma signal processing (For PAL)	QFH064-P-1010A	B112
Audio signal processor	AN6297S	5	Bipolar	Noise reduction circuit for FM/PCM audio	SOP020-P-0300B	B69
	AN6391NS	5		FM audio record/playback circuit	SOP028-P-0375A	B82
	AN3988NFHP/FBP	3 to 5		FM audio signal processing	QFH064-P-1010A QFH064-P-1414	B112 B114
	AN3986FBP/FHP	5		FM audio signal processing	QFH084-P-1818 QFH080-P-1212A	B120 B117
Servo control	MN1020705	5	CMOS	Built-in ATF 16-bit microcomputer servo	QFP128-P-1818	L82
	AN3861SA	3.0 to 5.5	Bipolar	Capstan DD motor drive circuit	SSOP032-P-0300	B87
	AN3895FHQ	5		Cylinder capstan motor drive circuit	LQFP064-P-1010	B111
Rec/Playback amp.	AN3358SH	5	Bipolar	2-head record/playback amplifier for 8mm VCR	SSOP024-P-0300A	B77

■ For Video Camera

Category	Type No.	Operating Voltage (V)	Process	Functions	Package	No.
CDS circuit	AN2011S	V_{CC1} =8.5 to 9.5 V_{CC2} =4.6 to 5	Bipolar	Correlational double sampling processing circuit	SOP016-P-0225A	B64
	AN2012S/SB	V_{CC1} =8.5 to 9.5 V_{CC2} =4.6 to 5		Correlational double sampling processing circuit	SOP016-P-0225A SSOP016-P-0225	B64 B66
	AN2018S	4.5 to 5.1		Correlational double sampling processing circuit	SOP008-P-0225A	B60
Analog signal processor	AN2050FB	4.5 to 5.3	Bipolar	Signal processing circuit for CCD B/W video camera	QFP044-P-1010A	B98
	AN2145NFHP	4.4 to 4.8		Signal processing circuit for CCD video camera (For 510H)	QFH080-P-1212A	B117
	AN2146FHP	4.4 to 4.8		Signal processing circuit for CCD video camera (For 670H)	QFH080-P-1212A	B117
	AN2147FHP	4.4 to 4.8		Signal processing circuit for CCD video camera (For768H)	QFH080-P-1212A	B117
	AN2101FH	4.3 to 5.1	Bi-CMOS	Signal processing and encoder for CCD video camera (For 510H)	QFP080-P-1212A	B118
	AN2125FHS	4.5 to 5.1		All-signal-processing single chip IC for CCD video camera (For 510H)	QFH128-P-1420	B122
	AN2263FHP	V_{CC1} =3.5 V_{CC2} =4.5 to 5.1		S-VHS/VHS luminance signal processing circuit	QFH080-P-1212A	B117
	AN3345FAS	5		4-head record/playback amp. for small cylinder VCR	QFH048-P-0710	B102
	AN3354FHP	3.3, 4.8		4-head record/playback amp. for small cylinder VCR	QFH064-P-1010A	B112
	AN3352FHP	3.3, 4.8		8-head record/playback amp. for small cylinder VCR	QFH064-P-1010A	B112
	AN3580SB	4.3 to 5.3		Video output circuit with character insertion interface	SSOP016-P-0225	B66
Digital pre -processor	NN2035FAQ	4.5 to 5.1	Bipolar	CDS + AGC + γ (For RGB type 8-bit DSP)	LQFP048-P-0710	B100
	NN2037FAQ	4.5 to 5.1		CDS + AGC + γ (Pre-knee for 9-bit DSP)	LQFP048-P-0710	B100
	NN2038FAQ	4.5 to 5.1		CDS + AGC + γ (Pre-knee for 9-bit DSP, good f. characteristics)	LQFP048-P-0710	B100
	NN2039FAQ	4.5 to 5.1		CDS + AGC + γ (γ correction for 8-bit DSP)	LQFP048-P-0710	B100
	AN2108FHP	4.5 to 5.1	Bi-CMOS	CDS + AGC + γ (Pre-Knee for 9-bit DSP) + EVR	QFH048-P-0707A	B101

■ For Video Camera (continued)

Category	Type No.	Operating Voltage (V)	Process	Functions	Package	No.
Color encoder others	AN2276S	4.5 to 5.5	Bipolar	Encoder circuit for CCD video camera	SSOP032-P-0375	B88
	AN2356FAP	4.6 to 5.0		Signal processing circuit for titler	QFH032-P-0707A	B92
	AN2365S	4.5 to 5.0		White balance circuit	SOP028-P-0375A	B82
	AN2458SH	4.5 to 5.1		Color encoder circuit	SSOP024-P-0300A	B77
Camera Y/C single chip	AN2380FHS	4.5 to 5.1	Bi-CMOS	CCD video camera signal processor VHS-PAL system, luminance and chrominance signal processor, encoder/decoder	QFH128-P-1420	B122
	AN2385FHS	4.5 to 5.1		CCD video camera signal processor VHS-NTSC system, luminance and chrominance signal processor, encoder/decoder	QFH128-P-1420	B122
	AN2401NFH	4.5 to 5.1		VHS-PAL system, luminance and chrominance signal processor, encoder/decoder	QFH080-P-1212A	B117
CCD drive pulse generator	MN5128	5	CMOS	1/2″ 510H IT-CCD (for NTSC/PAL)	QFP044-P-1010	L50
	MN5151-1/51H	5		1/3″ 510H IT-CCD (for NTSC/PAL monitor)	QFP044-P-1010 QFH048-P-0707	L50 L51
	MN5179/H	5		1/3″ 510H IT-CCD (for NTSC/PAL video camera)	QFP044-P-1010 QFH048-P-0707	L50 L51
	MN5139	5		1/2″ 670H QFIT-CCD (for NTSC/PAL)	QFP044-P-1010	L50
	MN5161	5		1/2″ 670H IT-CCD (for NTSC/PAL)	QFP044-P-1010	L50
				1/3″ 670H IT-CCD (for NTSC/PAL monitor)	QFP044-P-1010	L50
	MN5181	5		1/3″ 670H IT-CCD (for NTSC/PAL video camera)	QFP044-P-1010	L50
	MN5137	5		1/2″ 710H FIT-CCD (for NTSC/PAL)	QFP044-P-1010	L50
Sync. signal generator	MN67621F/5177	5	CMOS	420H, 510H, 590H, 670H, CCD (For NTSC/PAL/SECAM)	QFP044-P-1010 QFH048-P-0707	L50 L51
	MN5150	5		710H CCD (For NTSC/PAL/SECAM)	QFP044-P-1010	L50
	MN67603NS	5		External sync., VD output (For NTSC)	SOP022-P-0375	L37
	MN5126	5		External sync., VD output (For PAL)	SOP028-P-0375	L40
	MN5117	5		420H, 510H, 670H, 710H CCD (For NTSC/PAL)	SOP022-P-0375	L37
	MN6761S	5		External sync. control	SOP028-P-0375	L40
	MN676011NPS	5		External sync., VP output (For NTSC)	SOP028-P-0375	L40
EVF	MN83812B	9 to 11	CMOS	LCD view finder vertical direction drive (63 output)	SBB	—
	MN83813B	9 to 11		LCD view finder vertical direction drive (93 output)	SBB	—
	AN2510S	4.5 to 5.1	Bipolar	Electronic view finder drive circuit	SOP024-P-0375A	B76
	AN2512S	4.5 to 5.3		Electronic view finder drive circuit	SOP014-P-0225A	B63
	AN2516S	4.5 to 5.3		Electronic view finder drive circuit (with synchronization) adjustment-free, γ correction	SOP018-P-0300A	B68
	AN2515S	4.5 to 5.3		Electronic view finder drive circuit (with synchronization) adjustment-free	SOP016-P-0225A	B64

ICs/LSIs for VCR, Camera

■ For Video Camera (continued)

Category	Type No.	Operating Voltage (V)	Process	Functions	Package	No.
Motor driver	AN3815K	4.5 to 5.5	Bipolar	VCR cylinder motor drive circuit	SDIP018-P-0550	B43
	AN3890FBS	4.5 to 5.5		VCR capstan motor drive circuit	QFH036-P-0710	B94
	AN3893NFHP	5		VCR cylinder motor drive circuit cylinder	QFH048-P-0707A	B101
	AN3895FHQ	5		VCR cylinder capstan motor drive circuit	LQFP064-P-1010	B111
	AN6663S/SP	3 to 16		VCR camera AF motor drive	SOP008-P-0225A HSIP005-P-0000	B60 B12
	AN6664S	3 to 16		Video camera AF motor drive circuit	SOP016-P-0300	B65
CCD V driver for CCD image sensor	MN3110S/SA	5, 18, 13, 1, −7	CMOS	Multi-power-supply type	SOP020-P-0300 SSOP020-P-0225	L35 L36
	MN3111H	5		5V single power supply	QFH048-P-0707	L51
	MN3112SA	5, 18, 13, 1, −7		5V single power supply (SUB driver built-in power input, free order)	SSOP020-P-0225	L36
	MN3113F	5		5V single power supply, (fewer external circuits)	QFP044-P-1010	L50
Others	AN607P	9	Bipolar	Wide bandwidth amp. circuit (Video amp.: phase inversion)	SSIP004-P-0000A	B10
	AN608P	9		Wide bandwidth amp. circuit (Video amp.: in-phase)	SSIP004-P-0000A	B10
	AN614	9		Video amp. modulator-demodulator	SIP007-P-0000	B14
	AN2020S	5		Dual modulator-demodulator	SOP018-P-0300A	B68
	AN3935NFHP	V_{CC1} =4.5 to 5.5 V_{CC2} =4.5 to 9		FM audio signal processing circuit for VCR video camera	QFH064-P-1010A	B112
	AN3957FHP	V_{CC} =4.2 to 5.2		FM audio signal processing circuit for VCR video camera	QFH064-P-1010A	B112
	AN6040	9		Color encoder (For single camera)	SIP009-P-0000C	B17
	AN6041	9		Dual modulator-demodulator	SIP009-P-0000C	B17

■ Others for Video

Category	Type No.	Operating Voltage (V)	Process	Functions	Package	No.
RF modulator	AN3126/S	4.5 to 5.5	Bipolar	RF modulator circuit	DIP014-P-0300D SOP014-P-0225A	B37 B63
	AN3129S	4.5 to 5.5		RF modulator circuit, antenna switch driver circuit	SOP014-P-0225A	B63
	AN3131	9		RF modulator circuit (For SECAM)	ZIP014-P-0300	B28
Others	AN6873N/NS	−50 to −15	Bipolar	Fluorescent display tube drive circuit (8 circuits)	DIP018-P-0300D SOP018-P-0300A	B41 B68
	AN8360NK	8 to 19		Battery charge control circuit	SDIP024-P-0300	B50
	HH8360	—	H-IC	Battery charge control circuit	SIL-13	B26

■ For LD

Category	Type No.	Operating Voltage (V)	Process	Functions	Package	No.
For multi-laser player	MN66262	3.4 to 5.5	CMOS	Digital audio signal processing (For bilingual)	QFP064-P-1414	L60
	MN88101	4.5 to 5.5		Digital TBC	QFP084-P-1818	L72
	AN2661NK	4.5 to 5.5	Bipolar	Video signal processing circuit for multi-laser player	SDIP030-P-0400	B54
	AN2663K/S	4.75 to 5.5		Video signal processing circuit	SDIP024-P-0300 SOP024-P-0375A	B50 B76
	AN3891FBP	4.5 to 5.5		Spindle motor drive circuit for multi-laser player	QFH042-P-1010B	B95

■ Channel-Selection Peripheral Cicuits

Type No.	Operating Voltage (V)	Functions	Package	No.
AN5043SC	12	TV band switching circuit (31V balanced power supply built-in)	HSOP024-P-0300A	B73
AN5071	12	TV band switching circuit (31V balanced power supply built-in)	SIP009-P-0000C	B17
AN5707NS	5	TV electronic tuner control circuit	SOP028-P-0375A	B82

■ Video IF, Sound IF, Deflection Circuits

Type No.	Operating Voltage (V)	Functions	Package	No.
AN5150N	10	Large scale integrated circuit for TV (RF-AGC polarity; reverse)	DIP028-P-0600B	B52
AN5151N	10	Large scale integrated circuit for TV (RF-AGC polarity; forward)	DIP028-P-0600B	B52
AN5160NK	V_{CC1} = 9, V_{CC2} = 5	VIF, SIF, Video, Chroma, Sync. Signal processing circuit for color TV (NTSC systems)	SDIP052-P-0600A	B57
AN5163K	V_{CC1} = 9, V_{CC2} = 5	I^2C BUS, NTSC single chip	SDIP052-P-0600A	B57
AN5193K	V_{CC1} = 9, V_{CC2} = 5	I^2C BUS, PAL/NTSC single chip	SDIP064-P-0750B	B58
AN5195K	V_{CC1} = 9, V_{CC2} = 5	I^2C BUS, PAL/NTSC single chip	SDIP064-P-0750B	B58

■ Video IF, Signal Processing Circuit

Type No.	Operating Voltage (V)	Functions	Package	No.
AN5101SC	5	VIF, SIF circuit for TV	SSOP032-P-0375	B88
AN5132	12	Color TV VIF amplifier, Detection, AGC, AFC circuit	HDIP016-P-0300	B40
AN5138NK	12	Color TV video VIF amplifier, PLL detection, AGC, SIF, AFC circuit	SDIP028-P-0400B	B53
AN5170K	5	Adjustment-free VIF, SIF circuit	SDIP024-P-0300	B50
AN5179NK	V_{CC1} =4.5 to 5.5 V_{CC2} =V_{CC1} to 12	VIF, SIF circuit for TV (Quasi separate sound system)	SDIP030-P-0400	B54
AN5177NK	V_{CC1} =4.5 to 5.5 V_{CC2} =V_{CC1} to 12	VIF, SIF circuit for TV	SDIP030-P-0400	B54
AN5182NK	V_{CC1} =4.5 to 5.5 V_{CC2} =V_{CC1} to 12	VIF, SIF circuit for TV	SDIP024-P-0300	B50
AN5715K/S	5.5	Low voltage TV VIF, SIF circuit	SDIP024-P-0300 SOP024-P-0375A	B50/B76
▲AN5185FB	8	For Car TV VIF, SIF circuit	QFP044-P-1010C	B99

▲Under development

■ Sound Signal Processing Circuits

Type No.	Operating Voltage (V)	Functions	Package	No.
AN5215	12	TV SIF amplifier, FM detection circuit	SIP007-P-0000	B14
AN5250	12(AF Out 17V)	TV SIF amplifier, Detection, Sound output circuit	HDIP016-P-0300	B40
AN5262N	10	TV volume control circuit	SIP007-P-0000	B14
AN5265	10	TV audio output circuit	HSIP009-P-0000	B15
AN5275	32	TV audio output circuit	HSIP012-P-0000A	B23
AN7147N	12	TV audio output circuit	HSIP012-P-0000A	B23
AN5285K	12	TV audio AGC circuit	SSIP010-P-0000	B20

■ Chroma Signal/Video Signal Processing Circuits

Type No.	Operating Voltage (V)	Functions	Package	No.
MN8230A	4.75 to 5.25	Digital comb filter	QFP084-P-1818	L72
MN8232A	4.75 to 5.25	Picture-in-picture controller	QFH064-P-1010	L54
AN5302K	$V_{CC1}=12$, $V_{CC2}=9$	Color TV luminance signal, Chroma signal, Sync. signal processing circuit (NTSC)	SDIP052-P-0600A	B57
AN5304NK	$V_{CC1}=12$, $V_{CC2}=9$	Color TV luminance signal, Chroma signal, Sync. signal processing circuit (NTSC)	SDIP052-P-0600A	B57
AN5306NFBS	$V_{CC1}=9$, $V_{CC2}=5$	Color TV luminance signal, Chroma signal, Sync. signal processing circuit, Deflection signal processor circuit (NTSC, I^2C bus)	QFH080-P-1420B	B119
AN5308NK	$V_{CC1}=9$, $V_{CC2}=5$	NTSC System luminance signal, Chroma signal, Sync. signal processing circuit, Deflection signal processing circuit (NTSC, I^2C bus)	SDIP064-P-0750B	B58
AN5332N	12	Color TV video, Chroma signal processing circuit	DIP022-P-0400A	B47
AN5342K/FBP	9	Video aperture correction circuit	SDIP030-P-0400 QFH044-P-1010	B54 B97
AN5344FBP	9	Color signal compensation	QFH064-P-1414A	B115
AN5348K	$V_{CC1}=9$, $V_{CC2}=5$	Video signal compensation circuit	SDIP030-P-0400	B54
AN5334K	$V_{CC1}=12$, $V_{CC2}=9$	Color TV luminance, Chroma, Sync. signal processing circuit (NTSC)	SDIP052-P-0600A	B57
AN5337K	$V_{CC1}=9$, $V_{CC2}=5$	Color TV luminance, Chroma, Sync. signal processing circuit, Deflection signal processing circuit (NTSC, I^2C bus)	SDIP052-P-0600A	B57
AN5365FBP	$V_{CC1}=9$, $V_{CC2}=5$	TV/VCR luminance, Chrominance, Sync. signal processing circuit	QFH064-P-1414	B114
AN5366FB	$V_{CC1}=9$, $V_{CC2}=5$	TV/VCR luminance, Chrominance, Sync. signal processing circuit	QFP048-P-1212	B108
AN5371NS/79NS	$V_{CC1}=5$, $V_{CC2}=10$	Chroma output circuit for LCD TV	SOP022-P-0375A	B72
AN5372S	4.7	Video, chroma signal processing circuit for LCD color TV (PAL/NTSC)	SOP028-P-0375A	B82
AN5601K	12	Chroma, video, Sync. signal processing circuit for color TV (PAL/NTSC)	SDIP042-P-0600A	B55
AN5607NK	$V_{CC1}=9$, $V_{CC2}=5$	PAL/NTSC System luminance signal, Chroma signal, Sync. signal processing circuit, Deflection signal processing circuit (NTSC, I^2C bus)	SDIP052-P-0600A	B57
AN5612	12	Color TV video, Chroma signal processing circuit	DIP018-P-0300D	B41
AN5613/4	12	Color TV video, Chroma signal processing circuit	DIP018-P-0300D	B41
AN5615	12	TV video signal processing circuit	SIP012-P-0000	B25
AN5622N	12	PAL system color TV chroma signal processing circuit	HDIP016-P-0300	B40
AN5625N	12	TV PAL/NTSC/M-NTSC chroma signal processing circuit	DIP022-P-0400A	B47
AN5633K	12	Color TV SECAM/PAL signal conversion circuit	SDIP028-P-0400B	B53
AN5635N/NS	12	SECAM system color TV chroma signal processing circuit	DIP024-P-0600A SOP028-P-0375B	B49 B83
AN5636K	5	Color TV SECAM-PAL signal conversion circuit	SDIP030-P-0400	B54
AN5637	9	SECAM color signal demodulating circuit	DIP018-P-0300D	B41
AN5858K	12	AV switch	SDIP042-P-0600A	B55
AN5867K	7.5 to 10.5	TV monitor/Display R.G.B. interface circuit	SDIP028-P-0400B	B53
AN5868NK	8.2 to 10.5	TV monitor/Display CRT interface circuit	SDIP028-P-0400B	B53

■ Deflection Processing/Vertical Output Circuits

Type No.	Operating Voltage (V)	Functions	Package	No.
AN5411	12	Color TV deflection signal processing circuit	DIP024-P-0600A	B49
AN5416	12	Color TV deflection signal processing circuit	DIP018-P-0300D	B41
AN5421N	12	TV sync. signal detecting circuit	SIP009-P-0000C	B17
AN5422K	9.6 to 14.4	TV/Display deflection signal processing circuit	SDIP022-P-0300A	B48
AN5435	12	Color TV deflection signal processing circuit	DIP018-P-0300D	B41
AN5436N	12	Color TV deflection signal processing circuit	DIP018-P-0300D	B41
AN5512	24	TV vertical deflection signal output circuit	HSIP009-P-0000	B15
AN5515	24	TV vertical deflection signal output circuit	HSIP007-P-0000	B13
AN5521	24	TV vertical deflection signal output circuit	HSIP007-P-0000	B13
AN5532	24	TV vertical deflection signal output circuit	HSIP009-P-0000	B15
AN5534	V_{CC1} =7.5 to 15 V_{CC2} =10 to 30	TV vertical deflection signal output circuit	HSIP012-P-0000A	B23
AN5551	9.6 to 24	TV pin-cushion correction circuit	SIP009-P-0000C	B17
AN5753	11	TV horizontal deflection signal processing circuit	SIP009-P-0000C	B17
AN5763	12	B/W TV vertical deflection signal processing circuit, output circuit	HSIP012-P-0000	B22

■ Sound Multiplex Signal Processing Circuits

Type No.	Operating Voltage (V)	Functions	Package	No.
AN5817NK/NFB	8 to 10	TV sound-multiplex-broadcasting demodulator circuit (for USA)	SDIP042-P-0600A QFP044-P-1010A	B55/B98

■ ICs/LSIs for Satellite Broadcasting

Category	Type No.	Operating Voltage (V)	Process	Functions	Package	No.
For BS/CS	MN88821	4.5 to 5.5	CMOS	For BS/CS, PCM decoder (D/A converter built-in)	QFP064-P-1414	L60
	MN88822	4.5 to 5.5		For BS/CS, PCM decoder (D/A converter built-in)	QFP064-P-1414	L60
	MN8883	4.5 to 5.5		For BS/CS, PCM decoder (D/A converter Analog post filter built-in)	QFP048-P-1212A	L52
	AN8913SCR	9	Bipolar	Video signal processing dircuit for DBS/CS	HSOP028-P-0450A	B80
	AN8915K/SC	4.5 to 5.5		QPSK demodulator circuit for DBS	SDIP024-P-0300 HSOP024-P-0300A	B50/B73
	AN8918FBP	4.5 to 5.5		Video signal processing for DBS/CS, QPSK demodulator circuit, Audio LPF	QFH064-P-1414	B114
	AN8919FAP	4.5 to 5.5		Video signal processing for DBS/CS, QPSK demodulator circuit	QFH048-P-1010	B103
	AN8931FA	4.5 to 5.5		Video signal processing for DBS/CS, QPSK demodulator, Detection switch	QFP048-P-1010	B107
	AN8939S	5, 9		Video signal processing circuit for DBS	SOP020-P-0300B	B69
	AN8943SB	4.5 to 5.5		FM demodulator circuit for DBS/CS	SSOP028-P-0375	B84
	AN8946SB	4.5 to 5.5		FM demodulator for DBS/CS	SSOP028-P-0375A	B85
	AN8981SB	4.5 to 5.5		1.5GHz Mixer +PLL for DBS	SSOP028-P-0375A	B85

■ ICs/LSIs for Satellite Broadcasting (continued)

Category	Type No.	Operating Voltage (V)	Process	Functions	Package	No.
For HDTV	MN18888THW	4.5 to 5.5	CMOS	Data detection microcomputer (For MUSE)	QFP064-P-1414	L60
	AN5390FBS	V_{CC1} =9, V_{CC2} =5	Bipolar	RGB processing circuit	QFH080-P-1420B	B119
	AN5395FBP	9		Aperture compensation circuit	QFH048-P-1212A	B105
	AN8130K/FBP	V_{CC} =5, V_{EE} =−5	Bi-CMOS	High-speed low power consumption, 10 bit A/D converter	SDIP042-P-0600A QFH064-P-1414	B55/B114
	AN8140K/S	5		High-speed low power consumption, 10 bit D/A converter	SDIP024-P-0300 SOP024-P-0375A	B50/B76
	AN8131FBP	5	Bipolar	A/D converter	QFH048-P-1212	B104
	AN8146FBQ	5		3-ch D/A converter	QFS064-P-1414	B116

■ Others

Type No.	Operating Voltage (V)	Functions	Package	No.
AN5020	12	Pre-amplifier circuit for remote control reception	SIP009-P-0000C	B17
AN5025K/S	5	Remote control reception circuit	SSIP010-P-0000 SOP014-P-0225A	B20/B63
AN5026K	5	Remote control reception circuit	SSIP010-P-0000	B20
AN5560	12	50Hz, 60Hz discrimination circuit for TV	SIP007-P-0000	B14
AN5640	12	4-TV system (NTSC/M-NTSC/PAL/SECAM) detecting circuit	DIP018-P-0300D	B41
AN5641	12	4-TV system (NTSC/M-NTSC/PAL/SECAM) detecting circuit	DIP018-P-0300D	B41
AN5756K	12	CRT display deflection signal processing circuit, Deflection distortion compensation circuit	SDIP030-P-0400	B54
AN5766K	12	Pin-cushion distortion correcting circuit	SDIP022-P-0300A	B48
AN5780K	12	Wide bandwidth video amplifier for CRT display	SDIP028-P-0400B	B53
AN5790N	9.9 to 12.1	CRT display horizontal signal processing circuit	SIP012-P-0000	B25
AN5791	12	CRT display phase shift adjusting circuit	SIP009-P-0000C	B17
AN5792	9.9 to 12.1	CRT display horizontal signal processing circuit	HSIP012-P-0000	B22
AN5793K	12	CRT display deflection signal processing circuit	SDIP022-P-0300A	B48
AN5835	12	DC volume/tone control circuit	SIP012-P-0000	B25
AN5836	12	DC volume/tone control circuit	SIP012-P-0000	B25
AN5860/S	12	Analog switch circuit for R.G.B. interface	DIP014-P-0300D SOP024-P-0375A	B37/B76
AN5862K/S	12	Analog switch circuit for R.G.B. interface	SSIP013-P-0000 SOP018-P-0300A	B27/B68
AN5900	12	Switching regulator control circuit	SIP009-P-0000C	B17
AN5905/S	12	Switching regulator control circuit	DIP018-P-0300D SOP018-P-0300A	B41/B68
AN93B06K/SCR	12	90MHz RGB pre-amplifier circuit for CRT display	SDIP028-P-0400B HSOP028-P-0450A	B53 B80
AN96A07K	12	DAF waveform generator circuit for EWS, PC	SDIP028-P-0400B	B53

■ For Compact Disc Player

Category	Type No.	Operating Voltage (V)	Process	Functions	Package	No.
Head amp	AN8806SB	3.4 to 5	Bipolar	Head amplifier for digital servo (3-beam system)	SSOP036-P-0450	B89
	AN8807SB	3.4 to 5		Head amplifier for digital servo (3-beam system/CD-ROM)	SSOP036-P-0450	B89
	AN8808SB	3.4 to 5		Head amplifier for digital servo (responds to Sharp LDHU, Built-in amplifier)	SSOP036-P-0450A	B90
	AN8833S	2.7 to 5.5		I/V amplifier for MEC-LDHU	SOP008-P-0225A	B60
	AN8834SB	2.7 to 4.0		Head amplifier for digital servo (compatible with MEI optical pick up)	SSOP028-P-0375	B84
	AN8837SB	2.7 to 5.5		Head amplifier for digital servo (compatible with MEI optical pick up)	SSOP028-P-0375	B84
	AN8845SB AN8848SB	4.5 to 5.5		Head amplifier for digital servo (RF amplifier EQ, AGC, TE, FE amplifier Built-in)	SSOP036-P-0450	B89
Driver	AN8377N	5.5 to 16	Bipolar	3-ch linear driver (H-bridge system)	HDIP016-P-0300	B40
	AN8387S	3.5 to 9		2-ch liner driver for portable CD (H-bridge wystem)	SOP020-P-0300C	B70
	AN8812K	4.5 to 14		4-ch linear driver (Operational amplifier system) with dedicated loading motor driver	SDIP024-P-0550	B51
	AN8813SB/NSB	4.5 to 14		4-ch linear driver (operational amplifier system) with dedicated loading motor driver	HSOP042-P-0400	B81
	AN8816SB	5.5 to 14		4-ch linear driver (operational amplifier system)	HSOP042-P-0400	B81
	AN8817SB	4.5 to 14		2-ch linear driver (operational amplifier system)	HSOP042-P-0400	B81
	AN8818SB	4.5 to 14		3-ch linear driver (operational amplifier system)	HSOP042-P-0400	B81
	AN8819NFB	1.5 to 14		4-ch driver with DC/DC converter for portable CD	QFH044-P-1010	B97
	AN8780SB	4.5 to 14		4-ch linear driver (H-bridge system)	HSOP042-P-0400	B81
	AN8730SB	2.7 to 14		Low power consumption type 4-CH linear driver (incorporating a switching regulator by feedback)	SSOP028-P-0375A	B85
	AN8781SB	4.5 to 15		4-CH linear driver (H-bridge type)	HSOP042-P-0400	B81
	AN8782SB	4.5 to 14		4-CH linear driver (H-bridge type 3-CH, Operational amplifier type 1-ch) +general purpose operational amplifier	HSOP042-P-0400	B81
	AN8783SB	4.5 to 14		4-CH linear driver (a current feedback type actuator driver)	HSOP042-P-0400	B81
	AN8788SB	4.5 to 14		4-ch linear driver (DC-DC converter +quick charge circuit built-in)	QFP044-P-1010A	B98
	AN8293SA	4.25 to 5.5 3 to 14 (V_M)	Bipolar	3-phase full-wave current drive, soft switch (snubber-less), short brake, current limiting, heat protecting circuit built-in, Current = 900mA	HSOP024-P-0450A HSOP024-P-0450	B75 B74
	AN8293SC	4.25 to 5.5 4.5 to 14 (V_M)		3-phase full-wave current drive, soft switch (snubber-less), short brake, current limiting, heat protective circuit built-in, Current = 900mA	HSOP042-P-0400	B81
Power supply	AN8083S	3	Bipolar	Low voltage DC-DC converter IC, 4.8V output	SOP016-P-0225A	B64
	AN8086S	3		Low voltage DC-DC converter IC, 3.6V output	SOP016-P-0225A	B64
Sound signal processor	MN6650A	4.5 to 5.5	CMOS	Digital servo processor	QFP044-P-1010	L50
	MN6626	3.4 to 5.5		Digital signal processing LSI (16KRAM, PLL built-in), low voltage	QFP064-P-1414	L60
	MN66261	4.5 to 5.5		Digital signal processing LSI (16KRAM, PLL built-in), double speed	QFP064-P-1414	L60
Super one-chip	MN662720RB	4.5 to 5.5	CMOS	Digital signal processor, digital servo processor, Elimination of DF/DAC from MN66271RA	QFS080-P-1414	L68
	MN662713RC	4.5 to 5.5		Digital signal processor, digital servo processor, DF, D/A (MN66271RA's automotive version)	QFS080-P-1414	L68
	MN66271RA	4.5 to 5.5		Digital optical servo processor, Audio data signal processing, with DF	QFS080-P-1414	L68
	MN662710RA	4.5 to 5.5		Further to MN66271RA specifications, double-speed playback function is added. (Digital data reading only, D/A converter assures normal reading)	QFS080-P-1414	L68
	MN662712RA	4.5 to 5.5		Further to MN66271RA specifications, audio data output function after quad oversampling is added.	QFS080-P-1414	L68
	MN66271RAFA	4.5 to 5.5		MN66271RA with package changed	QFP084-P-1818	L72
	MN662740RE	3.0 to 5.5		The model similar to MN66271RA, which is added with the shock proof function. Low-voltage operation guaranteed. Audio performance of 3.3 V guaranteed	QFS080-P-1414	L68
	MN662741RH	4.0 to 5.5		5V version of MN662740RE. Audio performance of 5V guaranteed.	QFS080-P-1414	L68

■ For Compact Disc Player (continued)

Category	Type No.	Operating Voltage (V)	Process	Functions	Package	No.
Super one-chip (continued)	MN662740RM	3.0 to 5.5	CMOS	Digital signal processor, Digital servo, DF/DAC built-in. Compatible with hologram pickup. Compatible with 3V and 5V	QFS080-P-1414	L68
	MN662741RPB1	4.0 to 5.5		Digital signal processor, Digital servo, DF/DAC built-in. For car use. Servo parameter reinforced	QFS080-P-1414	L68
	MN662745RPC	2.8 to 3.5		Digital signal processor, Digital servo, DF/DAC built-in. For portable CD. For low voltage operation.	QFS080-P-1414	L68
	▲MN662747RPH	4.5 to 5.5		Digital signal processor, Digital servo, DF/DAC built-in. For car use. Servo performance improved (fs = 88.2 kHz)	QFS080-P-1414	L68
	MN662724RPE	4.5 to 5.5		Digital signal processor, digital servo processor, Function improved-version of digital servo processor MN662720 (fs = 88.2 kHz)	QFS080-P-1414	L68
D/A converter	MN6474A	4.5 to 5.5	CMOS	D/A converter (18 bits in internal resolution) with built-in DF, 768fs clock	QFP042-P-1414A	L47
	MN6475A	4.5 to 5.5		D/A converter with built-in DF, post filter (internal resolution 16-bit) clock 768/384fs with double speed mode	SOP024-P-0375	L38
	MN647511	3.0 to 3.5		D/A converter with built-in DF, post filter (internal resolution 16-bit) clock 768/384fs	SOP024-P-0375	L38
	MN6479A	4.75 to 5.25		D/A converter with built-in DF, post filter (internal resolution 16-bit) 384fs clock, Double speed mode	SSOP028-P-0375B	L41
	MN35502	3.3 to 5.5		D/A converter with built-in DF (for 16/20-bit input), 192/256/384/512/576fs clock (DD system)	SOP028-P-0375	L40
	MN35503	3.0 to 5.5		D/A converter with built-in DF (for16/20-bit input), For 192/256/384/512/576fs clock (DD system), with double speed mode	SOP028-P-0375	L40

▲Under development

■ For DAT

Type No.	Operating Voltage (V)	Process	Functions	Package	No.
MN6460A	4.75 to 5.25	CMOS	A/D converter with built-in DF (internal resolution 16 bit) clock 512fs	SSOP042-P-0450	L42
MN6470	4.5 to 5.5		D/A converter with built-in DF (internal resolution 18 bit) clock 512fs	QFP042-P-1414A	L47
MN6624	4.5 to 5.5		Digital signal processing	QFP124-P-2828	L80
AN6607NS	8 to 16	Bipolar	DC motor forward/reverse 2-speed electronic governor	SOP016-P-0300	B65
AN8320NFA	4.5 to 7.5		Servo interface	QFP048-P-1010	B107

■ ICs for FM/AM Tuner

● Car Radio

Type No.	Operating Voltage (V)	Process	Functions					Package	No.
			Front End	IF	NC	MPX	AM		
AN7243S	6.5 to 9.6	Bipolar	●					SOP014-P-0225A	B63
AN7283S	6.8 to 9.2		●					SOP020-P-0300B	B69
AN7280S	6.8 to 9.2		●					SOP020-P-0300B	B69
AN7259S	7.3 to 9.6			●				SOP020-P-0300B	B69
AN7286S	7.2 to 9.0						●	SOP020-P-0300B	B69
AN7418S	5 to 9					●		SOP018-P-0300A	B68
AN7463S	6 to 10				●	●		SOP028-P-0375A	B82
AN7464S	6 to 10				●	●		SSOP032-P-0375	B87
AN7465K/S	6 to 10				●	●		SDIP028-P-0400B SOP028-P-0375A	B53/B82
AN7291SC/FBP	7.2 to 9.6			●	●	●		SSOP042-P-0450A QFH048-P-1212	B91/B104
AN7292NSC/NFBP	7.2 to 9.6			●	●	●		SSOP042-P-0450A QFH048-P-1212	B91/B104

● Radio, Radio-cassette

Type No.	Operating Voltage (V)	Process	Functions					Package	
			Front End	IF	MPX	AM	Power		No.
AN7017SB	1 to 2	Bipolar	●					SSOP016-P-0225	B66
AN7203	1.8 to 7		●					SIP009-P-0000C	B17
AN7204	2.7 to 7		●					SIP009-P-0000C	B17
AN7205	1.5 to 7		●					SIP009-P-0000C	B17
AN7220	2 to 6.5			●		●		DIP018-P-0300D	B41
AN7221S	2 to 6			●		●		SOP018-P-0300A	B68
AN7223	2.8 to 12			●		●		DIP018-P-0300D	B41
AN7224	2.8 to 9.6			●		●		DIP018-P-0300D	B41
AN7420	3.5 to 12				●			SIP009-P-0000C	B17
AN7024	3 to 7			●	●	●		ZIP018-P-0350A	B31
AN7025K	1.8 to 6.6			●	●	●		SDIP022-P-0300A	B48
AN7233SH	0.97 to 2			●	●	●		SSOP028-P-0300	B86
AN7238K	3.6 to 7			●	●	●		SDIP022-P-0300A	B48
AN7002K	1.8 to 6 1.8 to 4.5					●	●	SDIP022-P-0300A	B48
AN7006NS	1.8 to 5		●	●		●		SOP028-P-0375A	B82
AN7007S/S(U)	1.8 to 4		●	●		●		SOP028-P-0375A SSOP028-P-0375A	B82/B85
AN7008K	1 to 2					●	●	SDIP022-P-0300A	B48
AN7009S	1.8 to 4.5					●	●	SOP024-P-0375A	B76
AN7235S	1.8 to 5		●	●	●	●		SOP024-P-0375A	B76

● For Hi-Fi

Type No.	Operating Voltage (V)	Process	Functions					Package	
			Front End	IF	DET	MPX	AM		No.
AN7273/S	3 to 12	Bipolar		●	●		●	DIP018-P-0300D SOP018-P-0300A	B41/B68
AN7470	9 to 14					●		DIP016-P-0300F	B39

ICs/LSIs for Audio

■ For Radio-cassette, Cassette Deck

● Equalizer Amp.

Type No.	Operating Voltage (V)	Process	Functions	Package	No.
AN7316	3.5 to 12	Bipolar	Recording/playback amplifier for radio-cassette	DIP016-P-0300D	B38
AN7317	3.5 to 12		Recording/playback amplifier for radio-cassette (with REC mute)	DIP016-P-0300D	B38
AN7318	5 to 14		Dual ALC pre-amplifier circuit against EMI	SOP016-P-0225A	B64
AN7351K/SC	±4.5 to ±7		Hi-Fi W-cassette deck recording/playback pre-amp lifier	SDIP042-P-0600A SSOP042-P-0450A	B55/B91
AN7345K	4 to 14		Radio-cassette Rec/PB pre-amplifier (for W-deck)	SDIP024-P-0300	B50
△AN7347K	4 to 14		Rec/PB pre-amplifier with built-in Rec/PB head switch (for W deck)	SDIP024-P-0300	B50
AN7352S	±4.5 to ±6.5		REC/PB pre-ampliefier with built-in VCA and TPS for W-cassette-deck.	SOP028-P-0375A	B82
AN7353S	±4.5 to ±6.5		Recording amplifier for EQ control	SOP024-P-0375A	B76

△Tentative

● Noise Reduction

Type No.	Operating Voltage (V)	Process	Functions	Package	No.
AN6291/S	1.8 to 14	Bipolar	dbx NR*1 for cassette deck, radio cassette	DIP022-P-0400A SOP022-P-0375A	B47/B72
AN7354SC	±4.5 to ±6.5		Dolby * B/CNR with built-in Line mute/Level meter drive	SSOP042-P-0450A	B91
AN7355SC	±4.5 to ±6.5		Dolby * B NR with built-in Line mute/Level meter drive	SSOP032-P-0375	B88
AN7367K	±5 to ±7		Dolby* dbx NR	SDIP028-P-0400B	B53
AN7374K/S	9 to 13		Dual Dolby* B/C NR for cassette-deck	SDIP028-P-0400B SOP028-P-0375A	B53/B82
AN7375N/NS	1.8 to 4.5		Dolby* B type NR for low voltage cassette-tape recorder	DIP018-P-0300D SOP018-P-0300A	B41/B68
AN7379NSH	1.0 to 3.6		Dolby* B decoder for 1.5V	SSOP024-P-0300A	B77
AN7389S	1.0 to 3.6		Dolby* B decoder for 1.5V	SOP018-P-0300A	B68

*1 "dbx"and dbx symbols are trade marks of That corporation. License of That corporation is necessary for the use of the product.
*2 "Dolby" and double D symbols are trade marks of Dolby Laboratories licensing corporation. License of Dolby Laboratories licensing corporation is necessary for the use of the product.

● Low Freg. Pre-Power Amp. (1-Chip)

Type No.	Operating Voltage (V)	Process	Single	Dual	BTL	Conditions		Output Power (mW)				Package	No.
						V_{CC} (V)	R_L (Ω)	<30	>30	>100	>300		
AN7082K	1.8 to 6	Bipolar		●		3	32			●	○	SDIP022-P-0300A	B48
AN7085NS	1.8 to 4.5		●		●	3	8			●	○	SOP020-P-0300B	B69
AN7086S	1.8 to 4.5		●			3	8				●	SOP024-P-0375A	B76
AN7104	4 to 9		●			6	8				●	DIP016-P-0300D	B38
AN7106K	1.8 to 4.5			●		3	4			●		SDIP024-P-0300	B50
AN7108	1.8 to 6			●		3	32		●	○		DIP016-P-0300D	B38
AN7109S	1.8 to 4.5			●		3	32		●			SOP028-P-0375A	B82

●Standard ○Application available

● Others (Tape Index Detection, Reverse Control, etc.)

Type No.	Operating Voltage (V)	Process	Functions	Package	No.
AN6230S	1.8 to 6	Bipolar	Low freq. power amplifier for cassette-tape-recorder (450mW)	SOP018-P-0300A	B68
AN6262N	4.5 to 16		Tape index detection circuit for radio-cassette-tape recorder/cassette-deck (Output at no melody =Low)	SIP009-P-0000C	B17
AN6263N	4.5 to 16		Tape index detection circuit for radio-cassette-tape recorder/cassette-deck (Output at no melody =High)	SIP009-P-0000C	B17

■ ICs for Audio Common Use

● DC Volume, Graphic Equalizer

Type No.	Operating Voltage (V)	Process	Functions	Package	No.
AN7322S	1.8 to 6	Bipolar	Live control circuit	SOP014-P-0225A	B63
AN7332S	3 to 14.4		2-channel 4-element graphic equalizer (Quasi 5-element)	SOP024-P-0375A	B76
AN7333K/S	4 to 14		4-element graphic equalizer for radio, radio-cassette tape-recorder	SDIP024-P-0300 SOP024-P-0375A	B50/B76
AN7337N/NS	±4 to ±18		7-element graphic equalizer	DIP020-P-0300A SOP020-P-0300B	B44/B69
AN7384N	±7 to ±11		Electronic volume for cassette-deck	DIP016-P-0300F	B39
AN7395K/S	6 to 10		Spacializer[Note)] audio processor	SDIP020-P-0300 SOP020-P-0300B	B46/B69

Note) Use of this Spacializer IC requires the license agreement of Desper Products Inc.

● Low Freq. Pre-Amplifier Circuit

Type No.	Operating Voltage (V)	Process	Functions	Package	No.
AN360	4 to 16	Bipolar	High advantage low noise amplifier for car stereo	SIP007-P-0000	B14
AN7060	(+60, −6)		Hi-Fi audio amplifier, pre-driver	SIP009-P-0000C	B17
AN7062N	80		Hi-Fi audio amplifier, pre-driver	DIP018-P-0300D	B41

● Low Freqency Power Amplifier

Type No.	Operating Voltage (V)	Process	Single	Dual	BTL	Conditions		Output Power (W)					Package	No.
						V_{CC} (V)	R_L (Ω)	≧1	>2	>5	>10	>15		
AN7112	4 to 14	Bipolar	●			6	8	<1					SIP009-P-0000C	B17
AN7117	2.5 to 9		●			6	4	●					SIP009-P-0000C	B17
AN7118S	1.8 to 4.5			●	○	3	4	<1					SOP018-P-0300A	B68
AN7135	5 to 18			●	○	15	3			●	○		HSIP012-P-0000A	B23
AN7139	6 to 18			●		9	4		●				HSIP012-P-0000	B22
AN7140	6 to 18		●			13.2	4			●			HSIP009-P-0000	B15
AN7141	4 to 12		●			6	4	●					SIP009-P-0000C	B17
AN7142	3.8 to 18			●	○	＊(6)9	4	＊●	●				HDIP016-P-0300	B40
AN7147N/49N	5 to 22			●	○	＊(9)12	3		＊●	●	○		HSIP012-P-0000A	B23
AN7148	6 to 18			●	○	＊(9)12	4		●	●	○		HSIP012-P-0000A	B23
AN7158N	5 to 20			●	○	＊16	8			●	○		HSIP012-P-0000B	B24
AN7163	7 to 20				●	13.2	4					●	HSIP012-P-0000A	B23
AN7164	8.3 to 24				●	21	8					●	HSIP012-P-0000A	B23
AN7164N	8.3 to 30				●	26.4	8					●	HSIP012-P-0000A	B23
AN7168	7 to 20			●	○	13.2	4			●	○		HSIP012-P-0000A	B23
AN7169	5 to 20			●	○	13.2	4			●	○		HSIP012-P-0000A	B23
AN7170	8 to 30		●			26.4	8			●	○		HSIP011-P-0000	B21
AN7171NK	7 to 18				●	13.2	4				●		HZIP016-P-0665	B30
AN7172NK	7 to 18			●	●	13.2	4				●		HSIP009-P-0000A	B16
AN7174K	8 to 18			●	●	13.2	4				●		HZIP016-P-0665	B30
AN7176K	8 to 18			●	●	13.2	4				●		HZIP016-P-0665	B30
AN7177	8 to 18			●	●	13.2	4				●	●	HZIP023-P-0138	B32
AN7178	8 to 18			●		13.2	4			●			HSIP012-P-0000A	B23
AN7190NK	8 to 18			●	●	13.2	4					●	HZIP016-P-0665	B30
AN7190NZ	8 to 18			●	●	13.2	4					●	HZIP015-P-0735A	B29
AN7191NK	8 to 18			●	●	13.2	4					●	HZIP016-P-0665	B30
AN7191NZ	8 to 18			●	●	13.2	4					●	HZIP015-P-0735A	B29
AN7195K	8 to 18			●	●	13.2	4				●		HZIP016-P-0665	B30
AN7195Z	8 to 18			●	●	13.2	4				●		HZIP015-P-0735A	B29

＊No heat Sink ●Standard ○Application available

ICs/LSIs for Audio

● Low Freqency Power Amplifier (continued)

Type No.	Operating Voltage (V)	Process	Single	Dual	BTL	Conditions		Output Power (W)					Package	
						V_{CC} (V)	R_L (Ω)	≧1	>2	>5	>10	>15		No.
AN7196K	8 to 18	Bipolar		●	●	13.2	4				●		HZIP016-P-0665	B30
AN7196Z	8 to 18			●	●	13.2	4				●		HZIP015-P-0735A	B29
AN7133N	6 to 24			●	○	12	3			●	○		HZIP023-P-0138	B32
AN7134NR	6 to 18			●	○	15	3			●	○		HZIP023-P-0138	B32
AN5275	10 to 40			●		32	8					●	HSIP012-P-0000A	B23
AN5265	V_{CC1} = 12 V_{CC2} = 18		●			12	8		●				HSIP009-P-0000	B15

✳ No heat Sink ●Standard ○Application available

■ ICs for Motor

Type No.	Operating Voltage (V)	Process	Functions	Package	No.
AN6608	8 to 16	Bipolar	Forward/reverse 2-speed electronic governor for DC motor	HDIP016-P-0300	B40
AN6609N/NS	8 to 16		Forward/reverse 2-speed electronic governor for DC motor	HDIP016-P-0300 HSOP024-P-0450A	B40/B75
AN6612/S	1.8 to 4		Motor control circuit	DIP008-P-0300B SOP008-P-0225A	B35/B60
AN6650/S	1.8 to 7		Motor control circuit	DIP008-P-0300B SOP008-P-0225A	B35/B60
AN6651	3.5 to 14		Motor control circuit	SSIP004-P-0000B	B11
AN6652	6 to 20		Motor control circuit	SSIP004-P-0000B	B11
AN6655S	1.05 to 3.6		Forward/reverse electronic governor for micro-motor	SOP016-P-0225A	B64
AN6656S	1.8 to 6		Forward/reverse electronic governor for micro-motor	SOP016-P-0225A	B64
AN6657/S	4.5 to 14		Forward/reverse electronic governor for micro-motor	DIP016-P-0300F SOP016-P-0225A	B39/B64
AN6659S	1 to 2.5		Electronic governor for 1.5V micro-motor	SOP010-P-0225A	B61

■ ICs for Display Driver

Category	Type No.	Operating Voltage (V)	Display Division		Functions				Remarks	Package	No.
			Log.	Linear	5 marks	7 marks	12 marks	Input amp. built-in			
LED	AN6875	12 to 16	●		●					SIP009-P-0000C	B17
	AN6876	12 to 16		●	●					SIP009-P-0000C	B17
	AN6877	5 to 16		●		●		●		HDIP016-P-0300	B40
	AN6878	5 to 16	●			●		●		HDIP016-P-0300	B40
	AN6879	4.4 to 12	●			●		●		DIP016-P-0300F	B39
	AN6882	6.2 to 16	●			●		●	With dot, bar display switch pins	DIP016-P-0300F	B39
	AN6884	3.5 to 16	●		●			●		SIP009-P-0000C	B17
	AN6886	4 to 16	●		●			●	Priority is in large input of 2-input amp.	DIP014-P-0300C	B36
	AN6887	5 to 16	●			●		●	Priority is in large input of 2-input amp. Series 2 LEDs	DIP016-P-0300F	B39
	AN6888	5 to 16	●		● (×2)			●	5 marks ×2-ch, Series 2 LEDs	DIP018-P-0300D	B41
	AN6891	7 to 16	●				●	●	Series 3 LEDs	DIP018-P-0300D	B41

■ Others

Type No.	Operating Voltage (V)	Process	Functions	Package	No.
MN6632A	5	CMOS	2-channel CMOS electronic volume for audio	DIP018-P-0300A	L10
AN7072N	74	Bipolar	High breakdown voltage audio amp. muting circuit	SIP007-P-0000	B14
AN7074K	10 to 23		HiFi audio power amp. muting control	SSIP013-P-0000	B27
AN8072N	10.5 to 16		Multi output power supply regulator	HSIP012-P-0000	B22

■ For Analog Clock (MOS ICs)

Motor Type	Type No.	Oscillating Frequency (MHz)	Supply Voltage (V)	Power Supply Current max (μA)	Motor Driving Pulse Output		Package		Remarks
					Frequency (Hz)	Pulse Width (ms)		No.	
Step motor	MN6251	4.19	1.5	35	0.5	31.25	DIP008-P-0300	L1	
	MN6263	32kHz	1.5	10	0.5	15.625	DIP008-P-0300	L1	
Synchronous motor	MN6095	4.19	1.5	35	16	31.25	DIP008-P-0300	L1	

■ For Timer

Type No.	Operating Voltage (V)	Process	Functions	Package	No.
AN6780/S	4.5 to 12	Bipolar	Long hour CR timer	SIP007-P-0000 SOP014-P-0225A	B14/B63
AN6781	4.5 to 12		Residual amount indication CR timer	DIP016-P-0300F	B39
AN6783S	5		ICs for long hour CR oscillation timer	SOP008-P-0225A	B60

■ Others

Type No.	Operating Voltage (V)	Process	Functions	Package	No.
MN871101	5	CMOS	Floppy disk controller for FDD (765 type)	QFH100-P-1420	L77
DN8640S	4 to 6	Bi-CMOS	3 ×8-bit shift register latch driver	SSOP036-P-0450	B89
DN8643S	4 to 6		24-bit shift register latch driver	SSOP036-P-0450	B89
DN8646FBP	4 to 6		4 ×8-bit shift register latch driver	QFH044-P-1010	B97
DN8648FBP	4 to 6		32-bit shift register latch driver	QFH044-P-1010	B97
DN8649FBP	4 to 6		2 ×16-bit shift register latch driver	QFH044-P-1010	B97
DN8657S	4.5 to 5.5		LED panel display driver (16 bit)	SOP028-P-0375B	B83
DN8659S	4.5 to 5.5		LED panel display driver (8 bit)	SOP020-P-0300C	B70
DN8665S	4.5 to 5.5		LED panel display driver (8 bit)	SOP020-P-0300C	B70
DN8667NS	4.5 to 5.5		LED panel display driver (8 bit)	SOP020-P-0300C	B70
AN6718N	14	Bipolar	Inverter control IC for microwave oven (Regulator built-in)	DIP014-P-0300C	B36
AN6721	23		IGBT driver IC (Regulator built-in)	SIP007-P-0000	B14

ICs/LSIs for Communication Equipment

■ For Facsimile (MOS ICs)

Type No.	Operating Voltage (V)	Process	Functions	Package	No.
MN86151	5	CMOS	LSI (6-bit) for shading compensation	QFP044-P-1010	L50
MN86157	5		LSI (7-bit) for shading compensation	QFP044-P-1010	L50
MN86051 *	5		Facsimile modem (ROM built-in) 9.6 Kbps	QFJ084-P-S115 QFP084-P-1818	L71/L72
MN195001 *	5		Facsimile modem 14.4 Kbps	QFH128-P-1818 LQFP128-P-1818	L83/L81
MN86062	5		Image CODEC LSI for facsimile	QFP084-P-1818	L72
MN86063	5		Image CODEC LSI for high-speed, high-function facsimile	QFP100-P-1818	L76
MN86072	5		Image processing LSI for high-speed facsimile (half-tone processing, shading compensation)	QFH128-P-1818	L83
MN86074	5		Image processing LSI for facsimile use (Half-tone treatment, shading correction)	QFH084-P-1212	L69
MN8354	5		Half tone processor; ASIC available	QFP084-P-1818	L72

* Sales by Matsushita Denso Inc.

■ For Telephone

Type No.	Operating Voltage (V)	Process	Functions	Package	No.
MN6112A/AS	2.5 to 5.5	CMOS	Dialer CMOS LSI (popular type, DTMF/Outpulse switching available)	DIP022-P-0400 SOP022-P-0375	L13/L37
MN6114	2.5 to 5.5		Dialer CMOS LSI (high end, DTMF/Outpulse switching available) with shorten dial and auto-flash re-dial	SDIP028-P-0400	L20
AN6141S/SB	2 to 5	Bipolar	Compander ICs for cordless phone	SOP024-P-0375A SSOP024-P-0375	B76/B78
AN6150	3 to 11.5		Speech network	DIP016-P-0300D	B38
AN6152	3 to 11.5		Speech network	DIP016-P-0300D	B38
AN6153N/NS	2.5 to 11.5		Speech network	DIP016-P-0300D SOP016-P-0300	B38/B65
AN6154NK/NS	3 to 11.5		Speech network	SDIP024-P-0300A SOP024-P-0375A	B48/B76
AN6162SC	2 to 5.5		Narrow freq. band FM reception	SSOP032-P-0375	B88
AN6166NK	V_{CC} =2.5 to 4.5 V_L =1 to 8		Cordless phone base set speech network	SDIP030-P-0400	B54
AN6167S/SB	2 to 5		Cordless phone handset speech network	SOP028-P-0375A SSOP028-P-0375	B82/B84
AN6170/S	10 to 22		Ringer, 1-tremolo call tone (The ring start current variable type)	DIP008-P-0300B SOP008-P-0225A	B35/B60
AN6171	10 to 22		Ringer, 4-tremolo call tone (High end)	DIP014-P-0300C	B36
AN6172	10 to 22		Ringer, 1-tremolo call tone (The ring starting voltage variable type)	DIP008-P-0300B	B35
AN6175K/FBP	3 to 12		Speech network for hands-free telephone	SDIP042-P-0600A QFH044-P-1010	B55/B97
AN6182K/S	1.8		Recording/playback ICs for answering phone	SDIP024-P-0300 SOP024-P-0375A	B50/B76
▲AN6184FBQ	4.5 to 5.5		Speech network with built-in cross-point SW for cordless telephone set	QFS064-P-1414	B116
▲AN6215S	2.1 to 6.0		AGC circuit for speech network	SOP008-P-0225A	B60
▲AN6455FB	3.2 to 6.0		Receiving circuit for cordless telephone set	QFP048-P-1212A	B109
AN6425K	3 to 12		Speech network	SDIP028-P-0400B	B53
AN6426NK	3 to 12		Hands-free speech network	SDIP042-P-0600A	B55
AN6480	5.6 to 8.4		IF amp. for mobile telephone	DIP018-P-0300D	B41
AN6448NFBP	5		Speech network IC, cross point switch built -in	QFH064-P-1414	B114
AN6472NFBP	5		Speech network IC, cross point switch built-in (High-end speech quality)	QFH064-P-1414	B114
AN6474FBQ/ NFBQ	5		Speech network IC, cross point switch built-in (Medium class)	QFS064-P-1414	B116
AN6477FBP	5		Speech network IC, cross point switch built-in (High-end speech quality)	QFH064-P-1414	B114
AN6657/S	5		Forward/reverse electronic governor	DIP016-P-0300F SOP016-P-0225A	B39/B64

▲Under development

■ For Communications Equipment (Others)

Type No.	Operating Voltage (V)	Process	Functions	Package	No.
AN6400FA	1.8 to 4.0	Bipolar	Direct conversion FSK demodulation IC for pager	QFH032-P-0707	B93
AN6407SH	3.4 to 5.5		IF AMP IC for PDC, up to 130MHz in input frequency	SSOP024-P-0300A	B77
AN6408SA	2.7 to 5.0		IF AMP IC for PHS, up to 300MHz in input frequency	SSOP020-P-0225A	B71
AN6454SH	1.8 to 3.0		Direct conversion mixer IC for pager, up to 450MHz in input frequency	SSOP010-P-0225	B62
AN6494SA	3.0 to 4.0		Quadrature modulator IC for PHS	SSOP016-P-0225A	B67
AN6483SH	3.7	Bipolar	IF amp IC for analog mobile telephone	SSOP024-P-0300A	B77
AN8585SH	3.7	Bi-CMOS	2nd local PLL IC with built-in Transmission VCO	SSOP024-P-0300A	B77
AN8586SH	3.7		2nd local PLL IC with built-in Transmission VCO (TX:IF 90.05MHz, 90.06MHz fixed)	SSOP024-P-0300A	B77
AN8587SH	3.7		2nd local PLL IC with built-in Transmission VCO (TX:IF 90.05MHz, 110MHz fixed)	SSOP024-P-0300A	B77
AN6484FBP	5	Bipolar	Multi power supply IC	QFH044-P-1010	B97
AN93C02NSB	1 to 1.8		IF amplifier circuit for a pager	SSOP016-P-0225	B66
MN6126FA	5	MOS	Tone squelch for communication control	QFP044-P-1010	L50
MN6152U	1.8 to 2.5	CMOS	Variable dividing PLL (175MHz: V_{DD} =1.8V)	SSOP016-P-0225	L33
MN6153UC	1.0 to 1.4		Variable dividing PLL (60MHz: V_{DD} =1.03V)	SSOP016-P-0225	L33
MN6155	1.1 to 1.4		Variable dividing PLL (90MHz: V_{DD} =1.10V)	SSOP016-P-0225	L33
AN6093NSA	2.7 to 4.0	Bipolar	Quadrature modulator IC for PHS	SSOP016-P-0225A	B67
AN6107SA	2.7 to 4.0		IF AMP for PDC	SSOP016-P-0225A	B67
AN6108SA	2.7 to 4.0		IF-IC for digital communications	SSOP020-P-0225A	B71
AN6478FBQ	3.0 to 5.5		Speech network with built-in cross point SW for facsimile	QFS048-P-1212A	—
AN6494NSA	2.7 to 4.0		Quadrature modulator IC for PDC	SSOP016-P-0225A	B67
AN8570SH	2.7 to 4.0	Bi-CMOS	0.2/1.1 GHz dual-PLL circuit for PDC	SSOP024-P-0300A	B77
AN8575SH	2.7 to 4.0		0.2/1.1 GHz dual-PLL circuit for PDC	SSOP024-P-0300A	B77
NN8513FAT	V_{CC} =1.05 to 2 V_{DD} =1 to 4	Bipolar	RF circuit for pager (Mix, demodulation)	LQFP048-P-0710	B100
▲MN195902	3.3	CMOS	JPEG, H261-compatible image-DSI	LQFP128-P-1818	L81

▲Under development

ICs/LSIs for Information Equipment

■ Color TFT-LCD Driver

Type No.	Operating Voltage(V) Input/Output	Process	Functions	Package
MN83872	5/5	CMOS	Source driver for 6-bit (260,000 colors) TFT-LCD, 300 outputs	TCP
MN83873	3.3/5		Source driver for 6-bit (260,000 colors) TFT-LCD, 240 outputs	TCP
MN83874	3.3/5		Source driver for 6-bit (260,000 colors) TFT-LCD, 300 outputs	TCP
MN83875	3.3/3.3		Source driver for 6-bit (260,000 colors) TFT-LCD, 300 outputs	TCP
MN86351	5/43		4-value output gate driver for TFT-LCD, 242 output	TCP

■ LSI (chip set) for small personal computer and portable information equipment

Type No.	Operating Voltage (V)	Process	Functions	Package	No.
MN5520AQ	3.3/5.0	CMOS	DMAC, PIC* 2, PTT, DRAM control, power control, i486CPU control, ISA control for PC/AT core	QFP256-P-2840	L97
▲MN5520AC	3.3/5.0			LGA284-C-1717	–
MN5521Q	3.3/5.0		PCMCIA I/F, IDE I/F, Printer I/F, RTC, SRAM, UART* 2; I/F for peripheral equipment	QFP208-P-2828	L94
▲MN5521C	3.3/5.0			LGA221-C-1515	–
▲MN5522Q	3.3/5.0		i486 CPU/PCI bus bridge	QFP208-P-2828	L94
▲MN5522C	3.3/5.0			LGA221-C-1515	–
▲MN5523	3.3/5.0		Low power 4-chip LSI dedicated for i486 GX	LGA284-C-1717	–

▲Under development

■ CD-ROM servo, signal processing LSI

Type No.	Operating Voltage (V)	Process	Functions	Package	No.
MN662743	4.50 to 5.50	CMOS	Servo signal processing for [4 ×] speed CD-ROM	QFP100-P-1818	L76
MN662744	4.75 to 5.50		Servo signal processing for [6 ×] to [8 ×] speed CD-ROM	QFP100-P-1818	L76
▲MN662750	4.75 to 5.25		Servo signal processing for [8 ×] to [12 ×] speed CD-ROM	QFP100-P-1818B	L76a

▲Under development

■ CD-ROM Decoder Signal Processor LSIs

Type No.	Operating Voltage (V)	Process	Functions	Package	No.
MN66404	4.75 to 5.25	CMOS	CD-ROM data processor (for ECC, IDE bus)	QFP128-P-1818	L82
▲MN66406	4.75 to 5.25		[8 ×] speed CD-ROM data processing (for ECC and IDE busses)	QFP128-P-1818	L82

▲Under development

■ Floppy Disk Controller (FDC)

Type No.	Operating Voltage (V)	Process	Functions	Package	No.
MN871101	4.75 to 5.25	CMOS	Built-in VFO FDC (for AT interface)	QFH100-P-1420	L77
MN871105	4.75 to 5.25		Built-in VFO FDC + RTC + DA converters + AD converter + general purpose port	QFP100-P-1818	L76
MN871106B	3.14 to 5.25		Built-in VFO FDC	QFP048-P-1212A	L52
MN871107	3.14 to 5.25		Built-in VFO FDC (with AT and PS/2 interfaces, FIFO integrated)	TQFP080-P-1212	L66

■ Display LSI

Type No.	Operating Voltage (V)	Process	Functions	Package	No.
MN89201	4.75 to 5.25	CMOS	VGA-NTSC scan converter	QFH128-P-1818	L83
MN89301	4.75 to 5.25		VGA-LCD display controller (256 color display)	QFP160-P-2828	L87
MN89303A	4.75 to 5.25		SVGA-LCD display controller (256 color display)	QFH128-P-1818	L83
MN89302	3.14 to 5.25		SVGA-LCD display controller with Bit BLT (256 entries, 32-shade)	QFH128-P-1818	L83

■ SCSI-Terminator

Type No.	Operating Voltage (V)	Process	Functions	Package	No.
AN8612NSB/NSR	4.0 to 5.5	Bipolar	SCSI-1/2, Compatible with FAST-20, 18 circuits	HSOP030-P-0300 HSOP024-P-0450	— B74

Discrete Semiconductor Selection Guide

Contents

■ SS-Mini Type, SS-Mini Flat-Lead Packages (D1)

P_C = 125mW

V_{CEO} (V) / I_C (mA)	10 (* 6V)	15	20	40	50	150	185
15			2SC4627 △ 2SC5021				
30	*△ 2SC5363		(2SA1790 2SC4626 2SC4655				
50	2SC4809 2SC5295 (65mA)	2SA1806		2SD2345	(2SA1791 2SC4656	(2SB1463 2SD2240	2SD2240A
80	2SC4808						
100				2SC4691	(2SB1462 2SD2216		

△ Tentative (: Complementary pair

■ S-Mini Type Package (D5)

P_C = 150mW

V_{CEO} (V) / I_C (mA)	6	7 (* : 10V, ** : 12V)	15 (* : 20V)	25 (* : 35V, ** : 40V)	45 (* : 50V, ** : 55V)	100 (* : 150V, ** : 185V)
10		2SC4410				
15			*2SC3931 *△ 2SC5020			
20			*2SC3933			2SD1824
30	2SC5190	**2SC3934	(*2SA1532 *2SC3930 *2SC3936			
50		2SC3935 *2SC4805 (I_C = 65mA)	2SA1739 *2SC3932	*2SC4417 (*2SA1531 *2SC3929 **2SD1823	(*2SA1748 *2SC4562 (**2SA1531A **2SC3929A	(*2SB1220 **2SD1821 ** 2SD1821A
80		*2SC3937 *2SC4835				
100				** 2SC3938[1)]	(2SB1218A *2SD1819A	
200			*2SC4755			
500		*△ 2SB1618 *△ 2SD2482	(*△2SB1619 *△2SD2483 *2SD1979 (I_C = 300mA)	(2SB1219 2SD1820	(*2SB1219A *2SD1820A	

△ Tentative 1) V_{CES} (: Complementary pair

■ Mini Type Package (3-pin) (D12)

P_C = 200mW

V_{CEO} (V) / I_C (mA)	7 (* : 10V)	15 (* : 18V)	20 (* : 25V)	35 (* : 40V)	45 (* : 50V, ** : 55V)	85	100	150 (* : 185V)
10	2SC3707							
15			2SC2404					
20			2SC3077				2SD1149	
30			(2SA1022 2SC2295 2SC2778					
50	*2SC3130 (I_C = 65mA) *2SC3904 △ 2SC5216 (V_{CE} = 8V)	2SA1738	2SC2480	(2SA1034 2SC2405 *2SD1030	(**2SA1035 **2SC2406	2SA1737		(2SB792 2SD814 (*2SB792A *2SD814A
80	*2SC3704 *2SC3829							
100				2SC3757[2)]	(2SB709A *2SD601A			
200			2SC4782[2)]					
500	*2SB970	*2SD1679[1)]	*2SB779 2SD1328 (*2SB710 *2SD602 *2SD1478 ◎		(*2SB710 *2SD602A *2SD1478A ◎			

△ Tentative ◎ Darlington Transistor 1) Built-in Zener Diode 2) V_{CES} (: Complementary pair

Transistors (Selection Guide by Packages)

■ Mini-Power Type Package (3-pin) (D19)

P_C = 1W (on PCB)

I_C (A) \ V_{CEO} (V)	10	20	25	50 (∗ : 40V)	60^{+25}_{-10}	80	100	120 (∗ : 150V)	400
100m	△ 2SC5019 (80mA)						2SC4543[1] (150mA)		2SD2413
500m		2SD2210				2SB767 2SD875	2SB789 2SD968	2SB789A 2SD968A	
1	2SB1537 2SD2357	2SB956 2SD1280 2SB1539 2SD2359	2SB766 2SD874	2SB766A 2SD874A	2SD2416	2SD1511 ◎ 2SA1890 2SC5026	2SB1600 2SD2458	∗2SB1601 ∗2SD2459	
2	2SB1589 (1.5A) 2SD2441 (1.5A) 2SB1612	△ 2SB1614		∗2SB1599 ∗2SD2457 (1.5A) 2SB1440					
3			2SD1119	2SD2185					
4		2SB1073							

△ Tentative (: Complementary pair ◎ Darlington Transistor 1)V_{CER}

■ TO-92 Type Packages (D46)

P_C = 400mW (Example)

I_C (A) \ V_{CEO} (V)	12 (∗ : 18V, ∗∗ : 10V)	20 (∗ : 25V)	40 (∗ : 45V)	50 (∗ : 55V)	60 (∗ : 70V)	80 (∗ : 100V)	120 (∗ : 150V)	200 (∗ : 300V)
20m		2SC1047				∗2SD1011	2SA921 2SC1980	
30m		2SA838 2SC1359 2SC829						
50m		2SC1215	2SD1010				∗2SA1123 ∗2SC2631	
70m								2SA1018 2SC1473 ∗2SA1767 ∗2SC1473A
80m	◇ 2SC2671(F)[1] 2SC4968 (V_{CEO} = 10V)							
100m		∗ 2SB774	★ 2SC3811 (V_{CES} = 40V)	∗2SA1127 ∗2SC2634		2SB726		∗2SC3187
500m		∗2SA719 ∗2SC1317 2SA1128 2SD1302		2SA720 2SC1318	∗2SA720A ∗2SC1318A			
700m				2SC2925				
1		∗2SB621 ∗2SD592		2SB621A 2SD592A				
5	∗∗2SD2464 ∗∗2SD2504 ∗2SB976 ∗∗△ 2SD2575	2SD965						

△ Tentative (: Complementary pair ◇ Center Emitter (1:B 2:E 3:C) ★ Center Base (1:E 2:B 3:C) 1) V_{CER} = 14V

Transistors (Selection Guide by Packages)

■ New S Type Packages (D34)

P_C = 300mW

I_C (A) \ V_{CEO} (V)	10	20	25	40	50 (∗ : 55V)	100	120 (∗ : 150V)
15m		2SC3315					
20m						2SD1512	2SB1036
30m		(2SA1323 2SC3314) 2SC3313					
50m		2SC3354	2SC4716	2SD1424			(∗2SA1816 ∗2SC4715)
100m					(2SA1309A 2SC3311A) (∗2SA1310 ∗2SC3312)		
500m	2SB1207	2SA1512 2SD1450 2SD2460 (700mA)	2SB1030 2SD1423		(2SB1030A 2SD1423A) 2SD1808A ◎		
1					(2SB1597 2SD2455)		
5		2SD2321					

(: Complementary pair ◎ Darlington Transistor

■ TO-92L Type Packages (D47)

P_C = 1W

I_C (A) \ V_{CEO} (V)	16 (∗ : 20V)	25 (∗ : 45V)	50 (∗ : 60V)	80 (∗ : 85V)	120	150	200	300	400
50m		∗ 2SC1360	∗ 2SC1360A			(2SA1124 2SC2632)			
70m							(2SA879 2SC1573)	2SC1573A	2SC1573B
150m			2SC3526(H)						
300m	∗ 2SC2851								
500m				(2SA777 2SC1509)	(2SB987 2SD1211)				
1	∗ 2SC1518	(2SA683 2SC1383)	(2SA684 2SC1384)						
5	∗ 2SB873 ∗ 2SD966								

(: Complementary pair

■ TO-92NL Type Packages (D48)

P_C = 1W

I_C (A) \ V_{CEO} (V)	16 (∗ : 20V, ∗∗ : 25V)	50	60 ±10 (∗ : 80V)	120	200	300
70m					2SB1221	2SA1858 2SC3941
300m	2SC4767					
500m	(∗∗2SA1619 ∗∗2SC4208)	(2SA1619A 2SC4208A)	(∗2SA1533 ∗2SC3939)	(2SB1297 2SD1937)		
1	(∗∗2SA1534 ∗∗2SC3940)	(2SA1534A 2SC3940A)				
3	∗△ 2SB1592					
5	∗2SB1288 ∗2SD1934					

△ Tentative (: Complementary pair

Transistors (Selection Guide by Packages)

■ M Type Mold Packages (D35)

P_C = 400mW (Example)

I_C (A) \ V_{CEO} (V)	18 (∗ : 20V)	25	35	40	50 (∗ : 55V)	80	120	200	300 (∗ : 400V)	500
20m	∗2SC2377 (I_C = 15mA)						(2SB788 2SD958			
30m	(∗2SA1254 ∗2SC2206 ∗2SC2647									
50m	∗2SC2636		2SB745 2SC2188	2SD1199	∗2SB745A					
70m								2SD662	2SD662A ∗2SD662B	
100m			2SD661		(2SB642 2SD637 ∗2SD661A				(∗2SB1209 ∗2SD1385	
500m	∗2SB790 ∗2SD1330	(2SB643 2SD638 2SD1205 ◎			(2SB644 2SD639 2SD1205A ◎	2SA1762 2SC4606			∗2SD1350	2SD1350A
1	∗2SD1458 (I_C = 700mA)	2SD973 2SD1198 ◎		(2SB819 (I_C = 1.5A) 2SD1051 (I_C = 1.5A)	2SD973A 2SD1198A ◎					
5	∗2SB1050 ∗2SD1244 ∗2SB1319									

(: Complementary pair ◎ Darlington Transistor

■ MT1 Type Mold Packages (D37) ···Package Dedicated for Radial Taping

P_C = 0.4/0.6W

I_C (A) \ V_{CEO} (V)	20	35	40	50	55
50m		2SC4787	2SD1995		2SB1651
100m				(2SB1320A 2SD1991A	2SD1993
500m	2SB1378 2SD1996			(2SB1321A 2SD1992A	

(: Complementary pair

■ MT2 Type Mold Packages (D38) ···Package Dedicated for Radial Taping (1W Type)

P_C = 1W

I_C (A) \ V_{CEO} (V)	10	20 (∗ : 25V)	40 (∗ : 45V)	50 (∗ : 60V)	80 (∗ : 100V)	120 (∗ : 150V)	400 (∗ : 300V)
50m			∗2SC4502			∗2SA1982 ∗△2SC5346	∗2SA1961 (I_C = 70mA)
500m		2SD2074 2SD2259 (I_C = 700mA)		(2SB1377 2SD2071 △2SC5335 (I_C = 700mA)		(2SB1473 2SD2225	2SB1488 2SD2565 △2SC5018 (I_C = 800mA)
1	(2SB1538 2SD2358	(2SB1540 2SD2360	(2SB1598 2SD2456 (I_C = 1.5A)	(2SB1322A 2SD1994A 2SD2258	(2SA1674 2SC4391	∗2SD2184	
2	△2SB1613			(2SB1434 2SD2177 ∗ 2SD2177A	∗2SD2067 ◎ ∗2SB1438		
5		∗2SB1398 2SD2249		(2SB1446 2SD2179			

△ Tentative (: Complementary pair ◎ Darlington Transistor

Transistors (Selection Guide by Packages)

■MT3 Type Packages (D40) ···Package Dedicated for Radial Taping

P_C =1.5W

I_C (A) \ V_{CEO} (V)	35	40	50	60	100 (∗ : 110V)	180 (∗ : 300V)	400 (∗ : 800V)
1	(2SB1413 2SD2133)				∗△ 2SC5341 (I_C = 0.15A) 2SD2220◎ (V_{CEO} =80V)	(2SB1414 2SD2134) ∗△ 2SC5340	∗2SC4985
1.5		2SC4545					
2			(2SB1435)	2SB1526	(2SB1439 2SD2183) △ 2SD2479 ◎	2SD2341	2SC4986
3	△ 2SB1593 (V_{CEO} =20V)		(2SD2178 2SB1447) △ 2SD2180	(2SB1416 2SD2136) 2SD2573 △ 2SB1630			
4				2SD2266			
5							2SB1653
8			2SB1504 ◎				

△ Tentative (: Complementary pair ◎ Darlington Transistor

■MT4 Type Packages (D41) ···Packages Dedicated for Radial Taping

P_C =2.0W

I_C (A) \ V_{CEO} (V)	60	60 ±10	100	800
1				2SC4892
2	(2SB1418◎ 2SD2138◎)		(2SB1418A◎ 2SD2138A◎)	
3	(2SB1417 2SD2137) 2SB1553 △ 2SB1631		(2SB1417A 2SD2137A)	
4	2SB1554 2SD2139 2SD2544		2SD2242A ◎	
5	2SD2242 ◎		2SD2530 ◎	

△ Tentative (: Complementary pair ◎ Darlington Transistor

■TO-126 Type Packages (TO-126 (a): D49※ , TO-126 (b): D50)

P_C =1.2W

I_C (A) \ V_{CEO} (V)	16 (∗ : 18V)	20 (∗ : 25V)	35 (∗ : 40V)	50 (∗ : 60V, ∗∗ : 80V)	100 (∗ : 120V)	150 (∗ : 180)	200 (∗ : 250V)	300 (∗ : 400V)
50m						(2SA914 2SC1953)		2SC5121 (I_C =70mA)
100m							∗2SC2258	∗2SB1011 2SC3063
150m				2SC3611				
500m	2SC2988				(2SA794 2SC1567) (∗2SA794A ∗2SC1567A) (∗2SA1110 ∗2SC2590)			2SC4212 (I_C =200mA)
1	(∗2SA900 ∗2SC1568)	∗2SD946 ◎	(2SA885 2SC1846)	2SD946A ◎ ∗∗ 2SD946B ◎ ∗ 2SD1645 ◎ 1) ∗ 2SD2018 ◎ 1)				
1.5			(∗2SA886 ∗2SC1847) (∗2SA963 ※ ∗2SC2209 ※)	(2SA1096 2SC2497) (∗2SA1096A ∗2SC2497A)				
2					2SD1640 ◎			
5		2SC2594 ※						

(: Complementary pair ◎ Darlington Transistor 1) Built-in Zener Diode

Transistors (Selection Guide by Packages)

■ U Type Packages (D36)

P_C =0.7W

V_{CEO} (V) / I_C (A)	18	40	50	60	80	100	200	300	400	500
60m									△ 2SA1868	
70m							2SA1375			
75m								△ 2SD2412		
100m								2SC2924		
200m								2SD1112		2SC5221
700m	△ 2SD2443 (V_{CEO} =20V)								2SB1632 (500mA)	2SA1949 (500mA) 2SC5222 △ 2SC5285 (500mA)
1.5		2SB968 2SD1295								2SA1950 (1A) 2SC5223
2			2SB1574 2SD2408			△ 2SB1576 ◎ △ 2SD2410 ◎	△ 2SD2411 ◎			2SA1951 2SC5224
3			2SB1575	△ 2SB1573 2SD2407 △ 2SD2453						
5	2SB967		2SD2409		2SD2556					

△ Tentative (: Complementary pair ◎ Darlington Transistor

■ N Type Packages (D42) / Surface Mounting N-type (DS) Package (D43)

P_C =1.3W

V_{CEO} (V) / I_C (A)	20	30	40	60	80	150 (∗ : 100V)	180	250	300 (∗ : 400V, ∗∗ : 800V)	900
0.6									∗2SA1498	
0.75								2SD1249	2SD1249A	
1						2SB1191 2SD1771 2SD1258	2SB1191A 2SD1771A		∗∗2SC3496	2SC3496A
2		2SD1316 ◎[1]		2SB937◎ 2SD1260◎ 2SD1319 ◎[1] 2SD1775	2SB937A◎ 2SD1260A◎ 2SD1775A	2SB928 2SD1250	2SB928A 2SD1250A		∗2SC3403 ∗2SC5063	
3				2SB929 2SD1252 2SD1259 2SB1643	2SB929A 2SD1252A 2SB931 2SD1254 2SD1259A 2SD1529				∗2SC5104	
4	2SB1070 2SD1538	2SD1317 ◎[1]	2SB1070A 2SD1538A	2SD1251 2SB930 2SD1253 2SB938◎ 2SD1261◎ 2SD1320 ◎[1]	2SD1251A 2SB930A 2SD1253A 2SB932 2SD1255 2SB938A◎ 2SD1261A◎					
5				2SD1719 (I_C =6A)	2SB933 2SD1256				∗2SD1611 ◎ (I_C =6A) ∗∗2SC5145[2]	
7	2SB952		2SB952A		2SB934 2SD1257	∗2SD1257A			∗2SD1534 ◎	
8		2SD1318 ◎[1]		2SB939◎ 2SD1262◎ 2SD1321 ◎[1]	2SB939A◎ 2SD1262A◎					
10	2SB935 2SB936		2SB935A 2SB936A							

△ Tentative (: Complementary pair 1) Built-in Zener Diode 2)V_{CES} ◎ Darlington Transistor

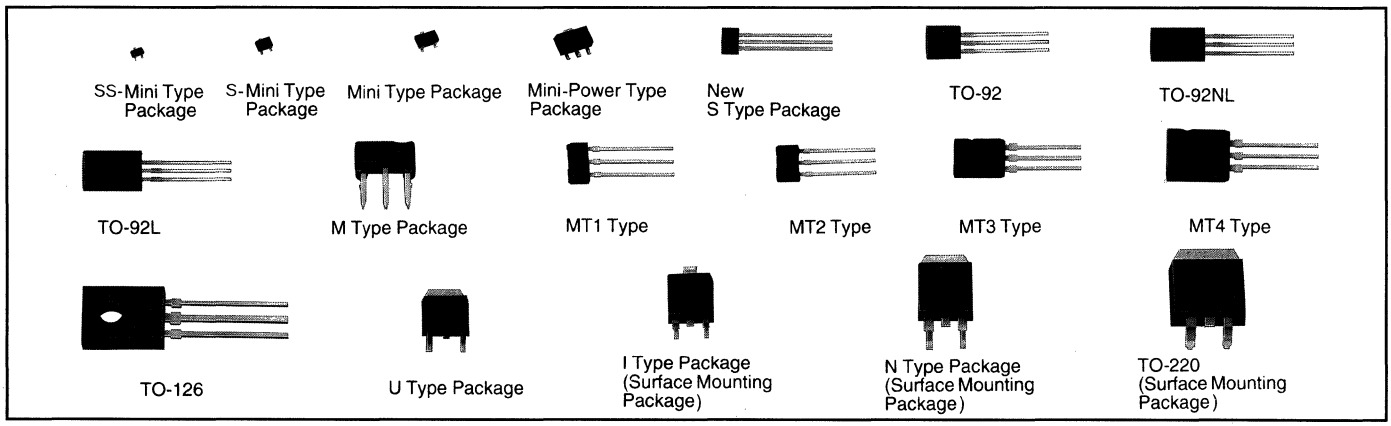

Transistors (Selection Guide by Packages)

■ I Type Packages (D44) / Surface Mounting I-type (DS) Package (D45)

P_C =1.3W

I_C (A) \ V_{CEO} (V)	20	40	60	80	100 (*: 150V)	180 (*: 250V)	300 (*: 400V, **: 600V)	800 (*: 900V)
0.3							**2SB1498	
0.5							*2SA1550	
0.6							*2SA1495	
0.75						*2SD2215	2SD2215A	
1			2SB1169	2SB1169A	*2SD1753 *2SB1233	2SB1233A		2SC3824 *2SC3824A
2			(2SB1170 2SD1751) (2SB1178◎ 2SD1748◎)	(2SB1178A◎ 2SD1748A◎)	(*2SB1171 *2SD1741)	(2SB1171A 2SD1741A)	*2SC3825	
3			(2SB1172 2SD1742) 2SD1754	(2SB1172A 2SD1742A) (2SB1174 2SD1744) 2SD1754A				
4			(2SB1173 2SD1743) (2SB1179◎ 2SD1749◎)	(2SB1173A 2SD1743A) (2SB1179A 2SD1749A) (2SB1175 2SD1745)	2SD2209 ◎[1)]			
5				(2SB1176 2SD1746)				
6			2SD1755					
7		2SB1638		(2SB1177 2SD1747)	2SD1747A			
8			(2SB1180◎ 2SD1750◎)	(2SB1180A◎ 2SD1750A◎)				
10	(2SB1148 2SD1752)	(2SB1148A 2SD1752A)						

(: Complementary pair ◎ Darlington Transistor 1) Built-in Zener Diode

■ TO-202 Type Packages (D51※), TO-220(a) Type Packages (D52)

P_C =1.2/1.4W

I_C (A) \ V_{CEO} (V)	32 (*: 40V)	50 (*: 60V)	70 (*: 80V)	150	250 (*: 300V)	400	1400 (*: 1500V)
0.1					2SC2923 ※ *2SC4714		
0.2					*2SC1905(H) *2SC2653(H) ※		
1.0				2SA1111			2SC4576[1)] (I_C =0.3A)
1.5							*2SD2001[2)]
2.0		(2SA748 2SC1398)	2SC1398A				
3.0	(2SA699 ※[3)] 2SC1226 ※[3)]) (*2SA699A ※[3)] *2SC1226A ※[3)])		*2SD1528				
4.0		*2SD1990					
5.0						2SA1500	

(: Complementary pair 1) V_{CER} 2) V_{CBO} 3) I_{CP} ※TO-202 Package (Without asterisk is TO-220(a) Package)

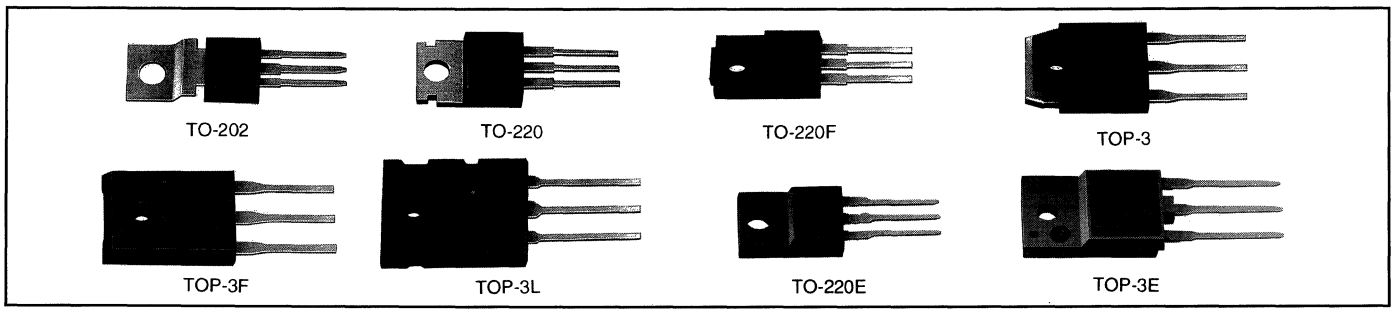

Transistors (Selection Guide by Packages)

■TO-220F Package (D55, D56※) / TO-220D Package (D58☆) / TO-220E Package (D59★)

V_{CEO} (V) / I_C (A)	20 (*: 25V, **: 30V)	40 (*: 50V, **: 35 ±5V)	60 (*: 60 ±10V)	80	90 (*: 100V, **: 120V, ***: 150V)	180 (*: 200V, **: 250V)	300 (*: 400V, **: 500V)	700 (*: 800V, **: 900V)	1000 (*: 1400V, **: 1500V)
0.1							2SC3942		
0.15		*2SC3943							
0.2	*2SC4358 (I_C =0.3A)						2SC3946		*2SC4152[3] (I_C =0.3A)
0.6							*2SA1499 *2SA1614 (I_C =0.5A)		
0.75						** 2SD1263	2SD1263A		
1			2SB954	2SB954A	***2SA1535 ***2SC3944 *** 2SD1272 ***2SB1192 ***2SD1772	2SA1535A 2SC3944A 2SB1192A 2SD1772A		**2SC3977[2] △**2SC5036★[2] ** 2SC4004※[2]	2SC3977A[2]
1.5			2SD2051◎[1] (I_C =1.6A)				** 2SC3868[2]	2SD2310※ *2SC3352[4] **2SC3352A[4] *2SC3794[2] **2SC3794A[2] *2SC3970[2] **2SC3970A[2]	2SD1734[2]※
2	** 2SD1322◎[1]		2SB949◎ 2SD1275◎ 2SD1325◎[1] 2SB1052 2SD1480 2SD1776 2SD2158 △2SD2538◎☆	2SB949A◎ 2SD1275A◎ 2SD1517 2SD1776A	***2SB940 ***2SD1264	2SB940A 2SD1264A		** 2SC3978A[2]	2SC3978A[2] ** 2SD1575[2]※
3			2SB941 2SD1266 2SB1299 △ 2SB1629★ 2SB1393 2SD1985 2SD2156 2SD1273 2SD2375☆	2SB941A 2SD1266A 2SB1548☆ 2SD2374☆ 2SB943 2SD1268 2SB1605★ 2SD2467★ 2SB1393A 2SD1985A 2SD1273A △ 2SD2549 2SD1530 2SD2374A★ 2SD2375A★ 2SB1548A 2SB1250◎ 2SD1890◎			*2SC4533 *2SC4953☆ *2SC5032★	*2SC3743 *2SC3971[2] **2SC3971A[2] *2SC3979[2] *2SC5037★[2]	2SC3979A[2]
4	2SB1071 2SD1539 2SB1603★ 2SD2465★ ** 2SD1323◎[1]	2SB1071A 2SD1539A	2SD1265 2SB942 2SD1267 2SB950◎ 2SD1276◎ 2SB1623◎☆ 2SD2420◎☆ 2SD1326◎[1] 2SD1475 2SD1510◎ 2SD2000 2SD2157 △ 2SD2486 △ 2SD2527☆	2SD1265A 2SB942A 2SD1267A 2SB944 2SD1269 2SB950A◎ 2SD1276A◎ 2SD2157A	2SB1251◎ 2SD1891◎				
5			△ 2SD2528☆	2SB945 2SD1270 2SB1606★ 2SD2468★ 2SD1315◎	*2SB1194◎ *2SD1633◎ *2SB1063 *2SD1499 *2SB1252◎ *2SD1892◎ *** 2SD1274[2]	*2SD1274A[2] ** 2SD1274B[2]	*2SA1501 *2SC3869 *2SC4026 *2SC4961★	*2SC3972[2] ** 2SC3972A[2] *2SC3353[4] ** 2SC3353A[4] *2SC3795[2] ** 2SC3795A[2] **2SC4638[2] **2SC4898☆ △**2SC5035★	

△ Tentative (: Complementary pair [: Same characteristics ◎ Darlington Transistor 1) Built-in Zener Diode 2) V_{CES} 3) V_{CER} 4) V_{CBO}

Transistors (Selection Guide by Packages)

■TO-220F Package (D55, D56※)/TO-220D Package (D58☆)/TO-220E Package(D59★) (continued)

V_{CEO} (V) / I_C (A)	20 (∗ : 25V, ∗∗ : 30V)	40 (∗ : 50V, ∗∗ : 35 ±5V)	60 (∗ : 60 ±10V)	80	90 (∗ : 100V, ∗∗ : 120V, ∗∗∗ : 150V)	180 (∗ : 200V, ∗∗ : 250V)	300 (∗ : 400V, ∗∗ : 500V)	700 (∗ : 800V, ∗∗ : 900V)	1000 (∗ : 1400V, ∗∗ : 1500V)
6			2SD1474		∗2SD1336 ◎ ∗∗2SD1336A ◎		∗2SD1446 ◎		
7	(2SB953 2SD1444)	(2SB953A 2SD1444A)		[(2SB946 2SD1271 (2SB1607★ 2SD2469★)	∗2SD1271A		∗2SD1535 ◎ ∗2SC3870 ∗2SC4559 ∗2SC5034 ★ ∗△2SC5217 ★	∗2SC3973[2)] ∗∗2SC3973A[2)] ∗2SC5077 ★[2)]	
8	∗∗2SD1324 ◎[1)]		(2SB951◎ 2SD1277◎ 2SD1327 ◎[1)] 2SB1464 ◎)	(2SB951A◎ 2SD1277A◎)	∗2SB1195 ◎ (∗∗2SB1108◎ ∗∗2SD1608◎) ∗2SD1634 ◎ (∗∗2SB1193◎ ∗∗2SD1773◎)				
10	2SB947 [(2SB948 2SD1445) (2SB1604★ 2SD2466★)]	2SB947A (2SB948A 2SD1445A)		2SD2151 2SD1964 (I_C =15A)			∗2SC3871		

△ Tentative (: Complementary pair [: Same characteristics ◎ Darlington Transistor 1) Built-in Zener Diode 2) V_{CES}

■TOP-3 Package (D60, D61 ※) / TOP-3L Package (D67☆)

V_{CEO} (V) / I_C (A)	50 (∗ : 55V)	80 (∗ : 90V, ∗∗ : 100V)	110 (∗ : 140V, ∗∗ : 150V)	160 (∗ : 180V)	400 (∗ : 500V)	800	900	1000 (∗ : 1200V, ∗∗ : 1400V)	1500 (∗ : 1700V)
1.5									2SD1727[1)] ○※
2.5									2SD1479[1)] ※ 2SD1728[1)] ○※
3		(2SB1500◎☆ 2SD2273◎☆)							2SD1439[1)] ○※
3.5									2SD1729[1)] ○※
4	∗2SD1641[2)]	(∗2SB1501◎☆ ∗2SD2274◎☆)							2SD1441[1)] ○※
5		(∗∗2SB1502◎☆ ∗∗2SD2275◎☆)				2SC3796[1)]	2SC3796A[1)]		2SD1391[1)] ※
6			(2SB1492◎☆ 2SD2254◎☆)						2SD1731[1)] ○※
7	2SA1185		(2SB1531◎ 2SD2340◎) (∗2SB1490◎☆ ∗2SD2250◎☆) (∗2SB1421 ∗2SD2140) (∗2SB1493◎ ∗2SD2255◎)	(2SB1645☆ 2SD2554☆)	2SC4687	2SC3797[1)]	2SC3797A[1)]		2SD1732[1)] ○※
8			(∗2SB1469◎ ∗2SD2221◎) (∗2SB1503◎☆ ∗2SD2276◎☆)	(2SB1470◎☆ 2SD2222◎☆)					
10			(∗∗2SB1362 (I_C = 9A) ∗∗2SD2053 (I_C = 9A)		2SC4768 ∗2SC4528 ☆ 2SC3171 2SC5278		2SC3982[1)] ☆	2SC3982A[1)] ☆ ∗2SC3738[1)] ☆ ∗∗2SC4096[1)] ☆	2SC4111[1)] ☆
12				(2SB1528☆ 2SD2327☆) (2SB1373 2SD2066) (2SB1347☆ 2SD2029☆) ∗2SB1419 ☆		2SC3976[1)] ☆			
15				(∗2SB1317☆ ∗2SD1975☆) (∗2SB1529☆ ∗2SD2328☆)	∗2SC3874[1)] ☆	∗2SC3910[1)] ☆			∗ 2SC5243[1)]☆ 2SC5381[1)]☆ (I_C = 16A)
20					∗2SC3850[1)]				△ 2SC5235[1)] ☆ 2SC5244[1)]☆

△ Tentative ◎ Darlington Transistor ○Built-in Damper Diode 1) V_{CBO} 2) Built-in Zener Diode (: Complementary pair

Transistors (Selection Guide by Packages)

■TOP-3F Package (D63, D64☆, D66▽) /TOP-3E Package (D65✿)

V_{CEO} (V) / I_C (A)	60 (∗: 80V)	100 (∗: 120V)	140 (∗: 150V)	200	400 (∗: 500V)	800 (∗: 850V)	900 (∗: 1000V)	1500 (∗: 1700V) Without Damper Diode	1500 (∗: 1700V) Built-in Damper Diode
1.5						2SC4960▽ (I_C = 1A)		2SD1735[1)]☆ 2SD1844[1)]☆	
2.5								2SD1576[1)]☆ 2SD1736[1)]☆	2SD1845[1)]☆ ∗ 2SD2521✿
3	2SD1643 ∗2SD1643A					2SC4359 2SC4420 2SC5159✿	2SC3506[1)] 2SC5156[1)]✿	2SD2511[1)]✿	2SD1541[1)]☆ 2SD2510[1)]✿
3.5								2SD1737[1)]☆	2SD1846[1)]☆
4							2SC3980[1)] ∗2SC3980A[1)] 2SC5282[1)]✿		2SD1632[1)]☆
5		2SB1054 2SD1485				2SC3211[1)] 2SC3798[1)] 2SC3577[1)]	2SC3211A[1)] 2SC3798A[1)] ∗2SC3507[1)] ∗2SC5157[1)]✿ 2SC3981[1)] ∗2SC3981A[1)] ∗2SC5283[1)]✿	2SD1577[1)]☆ 2SD1663[1)]☆ 2SD1738[1)]☆ 2SD2329☆ 2SD2513[1)]✿	2SD1847[1)]☆ 2SD2512[1)]✿
6		(∗2SB1371 ∗2SD2064) (2SB1253◎ (V_{CEO} = 110V) 2SD1893◎ (V_{CEO} = 110V)	∗2SD1457◎	2SD1457A◎				2SD1739[1)]☆ ∗ 2SC5389[2)]✿	2SD1848[1)]☆ ∗ 2SD2523✿
7			(2SB1254◎ 2SD1894◎) (2SB1372 2SD2065)	2SD1680	2SC4621 2SC5160✿	2SC3212[1)] 2SC3799[1)] 2SC3974[1)]	2SC3212A[1)] 2SC3799A[1)]	2SD1850[1)]☆ 2SD2330☆ 2SD2354☆ 2SD2515[1)]✿ 2SC5163[1)]✿	2SD1849[1)]☆ 2SD2057[1)]☆ 2SD2514[1)]✿
9			(∗2SB1361 ∗2SD2052) (2SB1255◎ (I_C = 8A) 2SD1895◎ (I_C = 8A)						
10	(∗2SB1154 ∗2SD1705)				∗2SC3872[1)] ∗2SC5158[1)]✿ ∗2SC3210[1)]	2SC3975[1)] 2SC5281[1)]✿ △ 2SC5284✿		2SD2355☆ 2SC5164[1)]✿ △ 2SC5166[1)]✿ ∗△ 2SC5309✿	
12	2SD1831				∗2SC3873[1)]			2SC5270	
15	(∗2SB1155 ∗2SD1706)				∗2SC3527[1)]			2SC5165[1)]✿ 2SC5380[2)]✿ (I_C = 16A)	
20	(∗2SB1156 ∗2SD1707)				∗2SC3528[1)] 2SC4535◎			△ 2SC5167[1)]✿ 2SC5294[1)]✿	

△ Tentative (: Complementary pair ◎ Darlington Transistor 1) V_{CES} 2) V_{CBO}

■ Silicon Small Signal Transistors

● General-use Low Frequency Amplifiers and Others

Application Functions	Package (No.) SS-Mini Type (D1)	S-Mini Type (D5)	Mini Type (D12)	New S Type (D34)	TO-92 (D46)	M Type (D35)	TO-92NL (D48)	TO-92L (D47)	Mini -Power Type (D19)	MT1 Type (D37)	MT2 Type (D38)	V_{CEO} V_{CES} 1) (V)	I_C (mA)	f_T (MHz) ●h_{FE} ＊NV(mV) ※V_{CE} (V)	f_T (MHz) I_E ＊I_C (mA)
General-use low freq. ampli-fier	2SB1462 2SD2216	2SB1218A 2SD1819A	2SB709A 2SD601A	2SA1309A 2SC3311A		2SB642 2SD637				2SB1320A 2SD1991A		50	100	●160 to 460	＊2
		2SB1219/A 2SD1820/A	2SB710/A 2SD602/A	2SB1030/A 2SD1423/A	2SA719/720 2SC1317/1318	2SB643/644△ 2SD638/639△	2SA1619/A 2SC4208/A			2SB1321A△ 2SD1992A△	2SB1377 2SD2071	25/50	500	● 85 to 340	＊150 △＊10
					2SA720A 2SC1318A	2SA1762 2SC4606	2SA1533 2SC3939	2SA777 2SC1509	2SB767 2SD875			70	500	●130 to 330 (e.g.)	＊150
				2SB1597 2SD2455	2SB621/A 2SD592/A	2SD973/A	2SA1534/A 2SC3940/A	2SA683/684 2SC1383/1384	2SB766/A 2SD874/A		2SB1322A 2SD1994A	25/50	1A	● 85 to 340	＊500
	2SA1791 2SC4656	2SA1748 2SC4562										50	50	●200 to 500 (f_T 250)	＊2
									2SB1440 2SD2185		2SB1434 2SD2177/A	50/60	2A	●120 to 340	＊200
											2SB1446 2SD2179	50	5A	●120 to 340	＊500
						2SB819 2SD1051			2SB1599 2SD2457		2SB1598 2SD2456	40	1.5A	● 80 to 220	＊1A
									2SA1890 2SC5026		2SA1674 2SC4391	80	1A	●120 to 340	＊100
									2SB1600 2SD2458			100	1A	●120 to 340	＊100
											2SB1438	100	2A	●120 to 340	＊200
									2SC4543			100 (V_{CER})	150	300	10
									2SB1601 2SD2459		2SD2184	150	1A	●120 to 340	＊100
High-h_{FE} (High V_{EBO})					2SB774							25	100	V_{EBO} :15V	＊0
	2SD2345	2SD1823	2SD1030	2SD1424	2SD1010	2SD1199				2SD1995		40	50	●400 to 2000	＊2
				2SD2460		2SD1458					2SD2259	20	700	●1000 to 2500	＊150
					2SC2925						△2SC5335	50	700	●400 to 1000	＊150
		2SD1824	2SD1149	2SD1512	2SD1011							100	20	●400 to 2000	＊2
Darlington			2SD1478/A			2SD1205/A						25/50	500	●2000 to 2000	＊500
						2SD1198/A			2SD1511		2SD2258	25/50	1A	●4000 to 4000	＊1A
											2SD2067	100	2A	●4000 to 4000	＊1A
Low freq. low noise ampli-fier				2SB1036	2SA921 2SC1980	2SB788 2SD958						120	20	＊150	—
	2SB1463 2SD2240/A	2SB1220 2SD1821/A	2SB792/A 2SD814/A	2SA1816 2SC4715	2SA1123 2SC2631			2SA1124 2SC2632			2SA1982 △2SC5346	150/185	50	＊150	—
		2SA1531/A 2SC3929/A	2SA1034/1035 2SC2405/2406	2SA1310 2SC3312	2SA1127 2SC2634	2SB745/A 2SD661/A				2SB1651 2SD1993		35/55	50	＊150	—
Low $V_{CE(sat)}$			2SB970	2SB1207								10	500	※ <0.3	＊400
			2SD1328	2SD1450	2SD1302	2SD1330			2SD2210	2SD1996	2SD2074	20	500	※ <0.4	＊500
			2SB779	2SA1512	2SA1128	2SB790				2SB1378		20	500	※ <0.4	＊500
		2SD1979										20	300	V_{EBO} :25V ●500 to 2500	＊4
		△2SB1618 △2SD2482										10	500	※ <0.17	＊250

△Tentative (: Complementary pair

● General-use Low Frequency Amplifiers and Others (continued)

Application Functions	Package(No.) S-Mini Type (D5)	Mini Type (D12)	New S Type (D34)	TO-92 (D46)	M Type (D35)	TO-92NL (D48)	TO-92L (D47)	Mini-Power Type (D19)	MT1 Type (D37)	MT2 Type (D38)	V_{CEO} V_{CES} 1) (V)	I_C (mA)	f_T (MHz) ●h_{FE} ＊NV(mV) ※V_{CE} (V)	I_E ＊I_C (mA)
Low $V_{CE(sat)}$											10	500	※ <0.2	＊250
								(2SB1537 2SD2357)		(2SB1538 2SD2358)	10	1A	※ <0.15	＊500
	(△2SB1619 △2SD2483)										20	500	※ <0.2	＊250
											20	500	※ <0.2	＊250
								(2SB1539 2SD2359)		(2SB1540 2SD2360)	20	1A	※ <0.2	—
								△2SB1614			20	2A	※ <0.25	※1A
							2SC1518	(2SB956 2SD1280)			18	1A	※ <0.5	＊50
								(△2SB1589 △2SD2441)			10	1.5A	※ <0.25	＊1A
						△2SB1592					20	3A	※ <0.22	＊1.4A
			2SD2321	2SB976 2SD965	2SB1319 2SB1050 2SD1244	2SB1288 2SD1934	2SB873 2SD966	2SB1073 2SD1119		2SB1398 2SD2249	20	5A	※ <1.0	＊3
				2SD2464 2SD2504							10	5A	※ <0.5	＊3
				△2SD2575									●≧700	＊500
Built-in Zener		2SD1679									18 ±5	500	●200 to 800	500
High break-down voltage								(2SB789/A 2SD968/A)			100/120	500	● 65 to 330	＊150
						(2SB1297 2SD1937)	(2SB987 2SD1211)			(2SB1473 2SD2225)	120	500	● 90 to 330	＊150
					(2SB1209 2SD1385)			2SD2413			400	100	●≧40	＊30
					2SD1350/A					2SD2565	400/500	500	●≧ 30	＊30
										2SB1488	400	500	● 80 to 280	＊50
										△2SC5018	400	800	● 50 to 300	＊5
Display	2SC4417				2SC2188				2SC4787		35	50	500	10
							2SC1360/A			2SC4502	45/60	50	500	10
							2SC3526(H)				50	150	350	110
								2SA1737			85	50	550	10
TV Chroma output				(2SA1018 2SC1473)	2SD662	2SB1221	(2SA879 2SC1573/A/B)				200/300/400	70	80	10
				(2SA1767 2SC1473A)	2SD662B	2SA1858 2SC3941				2SA1961	300/400	70	50 80	10
				2SC3187							300	100	140	20

△ Tentative (: Complementary pair

Transistors (Selection Guide by Applications and Functions)

● High Speed Switch, VCO and High Frequency Equipment

Application Functions	Package (No.)				V_{CEO} V_{CES} 1) (V)	I_C (mA)	t_s (ns)
	SS-Mini Type (D1)	S-Mini Type(D5)	Mini Type (D12)	TO-92(D46)			
High speed switch VCO and high freq. equipment	2SA1806	2SA1739	2SA1738		15	50	19
	2SC4691	2SC3938	2SC3757	2SC3811	40 1)	100	10
		2SC4755	2SC4782		20 1)	200	7
	2SC5379	2SC5378			8	80	—

● High Frequency Amplifiers and Others

Functions		Package (No.)							V_{CEO} (V)	I_C (mA)	f_T (MHz)	f_T I_E * I_C (mA)
		SS-Mini Type (D1)	S-Mini Type (D5)	Mini Type(D12) * 4 pin (D13)	Mini-Power Type (D19)	New S Type (D34)	TO-92 (D46)	M Type (D35)				
AM・FM	Mix. OSC. Amp.	2SC4655	2SC3936	2SC2778		2SC3313	2SC829	2SC2647	20	30	230	1
	Amp.	(2SA1790 2SC4626)	(2SA1532 2SC3930)	(2SA1022 2SC2295)		(2SA1323 2SC3314)	(2SA838 2SC1359)	(2SA1254 2SC2206)	20	30	250	1
Video-IF FM-RF Amp.								2SC2188	35	50	500	10
		2SC4627 △2SC5021	2SC3931 △2SC5020	2SC2404		2SC3315	2SC1047	2SC2377	20	15	650	1
VHF	OSC.					2SC4716			18	50	980	10
	OSC. Amp.		2SC3932	2SC2480		2SC3354	2SC1215	2SC2636	20	50	1200	D15
	Mix			△2SC5216					8	50	1300	15
UHF	RF		2SC3933	2SC3077					20	20	1100	3
	OSC.	2SC4809	2SC3935	2SC3130					10	50	1900	5
1V RF Amp.			2SC4410	2SC3707					7	10	4000	1
Wide Band Amp. SHF IF Amp.			2SC3934						12	30	4500	10
			2SC3937	2SC3704			◇2SC2671(F)		14	80	5500	40
		2SC4808	2SC4835	2SC3829	2SC5019		2SC4968		10	80	7600	30
		2SC5295	2SC4805	2SC3904					10	65	9000	20
		△2SC5363	2SC5190						6	30	10G	* 10

△ Tentative ◇Center Emitter (1:B 2:E 3:C) (: Complementary pair

● High Frequency Silicon Transistors for Transmitters

Frequency Band/ Application		Type No.	V_{CEO} (V)	I_C (A)	P_O min (W)	f_T min (MHz)	Package	No.
VHF	175MHz	2SC2851	16	0.3	0.6	1500	TO-92L	D47
		2SC4767	16	0.3	0.6	1500	TO-92NL	D48
		2SC4893	16	0.3	0.6	1500	MT3	D40
		2SC2988	16	0.5	1.8	600	TO-126(b)	D50

Transistors (Selection Guide by Applications and Functions)

● High Frequency Silicon Transistors for Tuners (FETs included)

Band	Application	Package (No.)							
		TO-92 (D46)	New S Type (D34)	M Type (D35)	SS-Mini Type (3 pin) (D1)	S-Mini Type (3 pin) (D5)	S-Mini Type (4 pin) (D6)	Mini Type (3 pin) (D12)	Mini Type (4 pin (D13)
VHF	RF Amp.	2SC1215					3SK268		3SK144 3SK227 3SK241 3SK268 3SK286
	Mix	2SC1215	2SC3354	2SC2636				2SC2480 △2SC5216	
	OSC.	2SC1215	2SC4716 2SC3354	2SC2636		2SC3932		2SC2480	
	IFAmp.	2SC1215	2SC3354	2SC2636				2SC2480	
UHF	RF Amp.					2SC3933	3SK272[1)] 3SK287	2SC3077	3SK143 3SK241[1)] 3SK273[1)] 3SK285
	Mix.					2SC3937 2SC3933		2SC3077	
	OSC.				2SC4809	2SC3935		2SC3130	
SHF	IF Amp.	2SC2671(F)				2SC3934 2SC3937 2SC4805 2SC5190		2SC3904 2SC3704 2SC3829	2SC5019 (Mini Power Type)
Wide band	RF Amp.	2SC2671(F)			2SC4808	2SC3934 2SC3937 2SC4805 2SC4835 2SC5190	3SK269 3SK270 3SK271	2SC3704	3SK219

△ Tentative 1)MES FET

■ Silicon Medium-Power Transistors

Application Function	Package (No.)					V_{CEO} (V)	I_C (A)	$V_{CE(sat)}$ typ (V)	I_C (A)	I_B (mA)	h_{FE} ●f_T (MHz)	I_C (A)
	U Type (D36)	TO-126 (D49※, D50)	MT3 Type (D40)	TO-202 (D51)	TO-220(a) (D52)							
General -use low freq. amplifier				2SA699 2SC1226		32	1.5	0.4	−1.5 2	−150 200	50 to 220	1
		2SA885 2SC1846	2SB1413 2SD2133			35	1	<0.5	0.5	50	85 to 340	0.5
	2SB968 2SD1295	2SA886 2SC1847		2SA699A 2SC1226A		40	1.5	0.4	−1.5 2	−150 200	50 to 220	1
		2SA963 ※ 2SC2209 ※				40	1.5	<1.0	1.5	150	30 to 220	1
			2SC4545			40	1.5	1.0	2.0	200	30 to 220	1
		2SA1096/A 2SC2497/A			2SA748 2SC1398	50/60	2	<1.0	1.5	150	50 to 220	1
	2SB1574 2SD2408		2SB1435 2SD2178			50	2	<0.3	1.0	50	120 to 340	0.2
	2SB1575 2SD2409		2SB1447 △2SD2180			50	3	<0.3	2.0	100	120 to 340	0.5

△ Tentative (: Complementary pair

■ Silicon Medium Power Transistors (continued)

Application Functions	Package (No.) U Type (D36)	TO-126 (D49※, D50)	MT3 Type (D40)	MT4 Type (D41)	TO-220(a) (D52)	TO-220F (D55)	V_{CEO} (V)	I_C (A)	$V_{CE(sat)}$ typ (V)	I_C (A)	I_B (mA)	h_{FE} ●f_T (MHz)	I_C * I_E (A)
General-use low freq. amplifier (continued)					2SC1398A		50/70	2	0.6	1.0	100	50 to 160	1
	△2SB1573 2SD2407		(2SB1416 2SD2136	(2SB1417 2SD2137		(2SB941/A 2SD1266/A	60	3	<1.2	3.0	375	40 to 250	1
				2SB1553			60	3	<1	2.0	50	300 to 700	0.5
							80	1	<0.3	0.5	50	120 to 340	0.1
		(2SA794/A 2SC1567/A					100/120	0.5	0.2	0.5	50	65 to 330	0.15
			(2SB1439 2SD2183				100	2	<0.3	1.0	50	120 to 340	0.2
							150	1	<0.3	0.5	25	120 to 340	0.5
			2SD2341				180	2	<1	0.5	50	60 to 240	0.15
	△2SD2412						300	0.75	<1	1.0	200	40 to 250	0.3
Audio drive		(2SA1110 2SC2590					120	0.5	1.0	0.3	30	65 to 330	0.15
			(2SB1414 2SD2134		2SA1111	(2SA1535/A 2SC3944/A	150/180	1	0.5	0.5	50	90 to 330	0.15
Low $V_{CE(sat)}$	2SB967						18	5	<1	3	100	90 to 625	2
		(2SA900 2SC1568					18	1	0.3	1.0	50	90 to 360	0.5
			△2SB1593				20	3	0.3	2.6	40	—	—
		2SC2594※					20	5	0.7	3.0	100	140 to 450	0.15
							20	5	<1.0	3.0	100	90 to 625	2
	2SD2556						80	5	<0.3	1.0	125	60 to 260	2
Pre-amp		(2SA914 2SC1953					150	0.05	<1.0	0.03	3.0	90 to 450	0.01
Darlington		2SD946/A/B	2SD2220 (80V)				30/60/100	1	<1.8	1.0	1	4000 to 40000	1
			2SB1526	(2SB1418 2SD2138		(2SB949 2SD1275	60	2	<2.5	2.0	8	1000 to 10000	2
			2SB1504				60	8	<1.5	4	8	1000 to 10000	4
		2SD1640	2SD2479				100	2	<1.5	1.0	1	4000 to 40000	1
		2SD1645				2SD2051	60 ±10	1	<1.8	1.0	1	4000 to 40000	1
		2SD2018					60^{+25}_{-10}	1	<1.8	1.0	1	6500 to 40000	1
	△2SB1576						100	2	<2.5	1	4	1000 to 10000	1
	△2SD2410												
	△2SD2411						200	2	<2.5	1.5	6	1000 to 10000	0.7
				2SD2242/A		2SD1276/A	60/80	4	<2.0	3.0	12	1000 to 10000	3
				2SD2530			100	5	<2.5	4.0	16	1000 to 10000	2
High breakdown voltage		(2SA914 2SC1953					150	0.05	<1.0	0.03	3	90 to 450	0.01
		2SB1011					400	0.1	<2.5	0.05	5	≧30	0.03
			2SB1653				400	0.5	<1.5	0.2	40	80 to 280	0.05
	(2SA1949 2SC5222 △2SC5285						500	0.5	<1	0.25	50	20 to 500	0.01
	(2SA1950 2SC5223						500	1.0	<1	0.5	100	20 to 500	0.01
	(2SA1951 2SC5224						500	2.0	<1	1.0	200	20 to 500	0.01
	2SC5221						500	0.2	<1	0.1	20	20 to 500	0.01
Display		2SC3611	△2SC5341			2SC3943	V_{CBO} 110	0.15	<0.5	0.15	15	●350	* 0.11

△ Tentative (: Complementary pair

Transistors (Selection Guide by Applications and Functions)

■ Silicon Medium-Power Transistors (continued)

Application Functions		Package (No.) U Type (D36)	TO-126 (D49※, D50)	MT3 Type (D40)	MT4 Type (D41)	TO-202 (D51)	TO-220(a) (D52)	TO-220F (D55)	V_{CEO} (V)	I_C (A)	$V_{CE(sat)}$ typ (V)	I_C (A)	I_B (mA)	h_{FE} ●f_T (MHz)	I_C ∗ I_E (A)
TV	Chroma input		2SC2258						250	0.1	<1.2	0.05	5	●100	∗ 0.01
			2SC3063	△ 2SC5340		2SC2923	2SC4714	2SC3942	300	0.1	<1.5	0.03	3	●140	∗ 0.02
		2SA1375							200	0.07	<1.5	0.05	5	●80	∗ 0.01
		2SC2924							300	0.1	<1.5	0.03	3	●140	∗ 0.02
			2SC5121						400	0.07	<1.2	0.05	5	●80	∗ −0.01
	Horizontal drive	2SD1112				2SC2653/(H)	2SC1905(H)	2SC3946	300	0.2	<1.0	0.05	5	●70	∗ 0.01
High h_{FE}				△ 2SB1630	△ 2SB1631				60	3	<1.0	2.0	50	350 to 625	0.5
		△ 2SD2453		2SD2573	2SD2139			2SD1273	60	3	<1.0	2.0	50	500 to 2500	0.5
		△ 2SD2443							20	0.7	<0.4	0.5	50	1000 to 2500	0.15
								△ 2SD2486	60	4	<0.5	2.0	50	300 to 2000	0.8
					2SD2544				60	7	<0.5	2.0	50	500 to 2000	0.8

△ Tentative

■ Silicon Power Transistors

Application Functions	V_{CEO} (V)	I_C (A)	$V_{CE(sat)}$ typ (V)	I_C (A)	I_B (mA)	Package (No.) TO-220(a) (D52) NPN	TO-220F(D55) PNP	TO-220F(D55) NPN	TO-220E(D59) PNP	TO-220E(D59) NPN	TO-220D(D58) PNP	TO-220D(D58) NPN	N Type(D42) PNP	N Type(D42) NPN	I Type(D44) PNP	I Type(D44) NPN
General-use	60/80	1	<1	1	125		2SB954/A								2SB1169/A	
	60/80	2	<2	2	200		2SB1052	2SD1480							2SB1170	2SD1751
	60/80	4	<1	2	400			2SD1265/A						2SD1251/A		
			<1	2	200			2SD1475								
			<1.5	4	400	2SD1990		2SD2000								
	60/80	3	<1.2	3	375		2SB941/A	2SD1266/A			2SB1548/A	2SD2374/A	2SB929/A	2SD1252/A	2SB1172/A	2SD1742/A
			<1.2	3	375		2SB1393/A	2SD1985/A								
	60/80	4	<1.5	4	400		2SB942/A	2SD1267/A					2SB930/A	2SD1253/A	2SB1173/A	2SD1743/A
	80	2	<0.5	2	100			2SD1517								
	80	3	<0.7	3	375							△ 2SD2549				
	80	10	<0.5	6	300			2SD2157								
	100	5	<2	3	300		2SB1063	2SD1499								
	150/180	1	<1	0.5	50		2SB1192/A	2SD1772/A					2SB1191/A	2SD1771/A	2SB1233/A	
	150/180	2	<1	0.5	50		2SB940/A	2SD1264/A					2SB928/A	2SD1250/A	2SB1171/A	2SD1741/A
	250/300	0.75	<1	1	200			2SD1263/A						2SD1249/A		2SD2215/A
Low $V_{CE(sat)}$	20/40	4	0.25	2	100		2SB1071/A	2SD1539/A	2SB1603	2SD2465			2SB1070/A	2SD1538/A		
	20/40	7	0.32	5	160		2SB953/A	2SD1444/A					2SB952/A		2SB1638	
	20/40	10	0.4	10	330		2SB948/A	2SD1445/A	2SB1604	2SD2466			2SB936/A		2SB1148/A	2SD1752/A
			0.32	7	230		2SB947/A						2SB935/A			
	80	3	0.3	2	100		2SB943	2SD1268	2SB1605	2SD2467			2SB931	2SD1254	2SB1174	2SD1744
			0.12	2	100	2SD1528		2SD1530						2SD1529		
	80	4	0.25	3	150		2SB944	2SD1269					2SB932	2SD1255	2SB1175	2SD1745
	80	5	0.3	1	125		2SB945	2SD1270	2SB1606	2SD2468			2SB933	2SD1256	2SB1176	2SD1746
	80	15	0.5	7	350			2SD1964								
	80/100	7	0.25	5	250		2SB946	2SD1271/A	2SB1607	2SD2469			2SB934	2SD1257/A	2SB1177	2SD1747/A

△ Tentative

■ Silicon Power Transistors (continued)

Application Functions	V_{CEO} (V)	I_C (A)	$V_{CE(sat)}$ typ* (V)	I_C (A)	I_B (mA)	Package (No.)									
						TO-220F(D55)		TO-220E(D59)		TO-220D(D58)		N Type(D42)		I Type(D44)	
						PNP	NPN	PNP	NPN	PNP	NPN	PNP	NPN	PNP	NPN
High h_{FE}	60	6	<1	5	100		2SD1474						2SD1719		2SD1755
	60/80	2	<1	1	25		2SD1776/A						2SD1775/A		
	60	2	<1	1	25		2SD2158								
	60/80	3	<1	2	50	2SB1299/A	2SD1273/A	△2SB1629			2SD2375/A	2SB1643	2SD1259/A		2SD1754/A
	60	3	<1	2	50		2SD2156								
	60	4	<0.7	3	75						△2SD2527				
	60	5	<0.3	4	100						△2SD2528				
	150	1	<1	0.5	20		2SD1272						2SD1258		2SD1753
Darlington	60	4	<2	3	12		2SD1510								
	60/80	2	<2.5	2	8	2SB949/A	2SD1275/A				△2SD2538	2SB937/A	2SD1260/A	2SB1178/A	2SD1748/A
	60/80	4	<2	3	12	2SB950/A	2SD1276/A			2SB1623	2SD2420	2SB938/A	2SD1261/A	2SB1179/A	2SD1749/A
	60	4	<2	3	12		2SD2157								
	60	8	<1.5	4	8	2SB1464	2SD2214								
	60/80	8	<1.5	4	8	2SB951/A	2SD1277/A					2SB939/A	2SD1262/A	2SB1180/A	2SD1750/A
	80	5	<1	1.5	50		2SD1315								
	100	5	<1.5	3	3	2SB1194	2SD1633								
	100	8	<1.5	5	5	2SB1195	2SD1634								
	100/120	6	<1.5	5	12.5		2SD1336/A								
	120	8	<1.5	4	8	2SB1108 2SB1193	2SD1608 2SD1773								
	400	6	<1.5	3	60		2SD1446						2SD1611		
	400	7	<2	7	70		2SD1535						2SD1534		
Darlington built-in Zener	30 ±5	2	<2.5	2	8		2SD1322						2SD1316		
	30 ±5	4	<2.5	3	12		2SD1323						2SD1317		
	30 ±5	8	<1.5	4	8		2SD1324						2SD1318		
	60 ±10	2	<2.5	2	8		2SD1325						2SD1319		
	60 ±10	4	<2.5	3	12		2SD1326						2SD1320		
	60 ±10	8	<1.5	4	8		2SD1327						2SD1321		
	100 ±15	4	<2	3	12										2SD2209

△ Tentative

Transistors (Selection Guide by Applications and Functions)

■ Silicon Large-Power Transistors

Application Functions	V_{CEO} (V)	I_C (A)	$V_{CE(sat)}$ (V)	I_C (A)	I_B (mA)	Package (No.) TOP-3(a) (D60)	TOP-3F(a) (D63)
General-use	50	7	<0.8	7	700	2SA1185	
	100	5	<2	3	300		2SB1054/2SD1485
	140	7	<2	5	500	2SB1421	
Low $V_{CE(sat)}$	80	10	0.2	6	300		2SB1154/2SD1705
		15	0.2	7	350		2SB1155/2SD1706
		20	0.25	8	400		2SB1156/2SD1707
Darlington	150	6	<1.5	3	60		2SD1457
	200	6	<1.5	3	60		2SD1457A
	400	20	<2.0	20	800		2SC4535
High-h_{FE}	55	4	<2	0.5	2	2SD1641	
	60	10	<0.5	5	100		2SD1831
	80/100	3	<1	2	50		2SD1643/A

■ Silicon Power Transistors for Audio

● Single

Application	V_{CEO} (V)	I_C (A)	$V_{CE(sat)}$ (V)	I_C (A)	I_B (mA)	P_C (W)	Package (No.) TOP-3(a) (D60)	TOP-3F(a) (D63)	TOP-3L (D67)
Audio output	120	6	<2	4	400	70		2SB1371/2SD2064	
	140	7	<2	5	500	80	2SB1421/2SD2140	2SB1372/2SD2065	
	150	9	<2	7	700	100	2SB1362/2SD2053	2SB1361/2SD2052	
	160	12	<1.8	8	120	120			2SB1419
	160	12	<2	8	800	120	2SB1373/2SD2066		2SB1347/2SD2029 2SB1528/2SD2327
	180	15	<2.5	10	1(A)	150			2SB1317/2SD1975 2SB1529/2SD2328

● Darlington

Application	V_{CEO} (V)	I_C (A)	$V_{CE(sat)}$ (V)	I_C (A)	I_B (mA)	P_C (W)	Package (No.) TO-220F(a)(D55)	TOP-3(a)(D60)	TOP-3F(a)(D63)	TOP-3L(D67)
Audio output (incl. driver) Darlington	80	3	<2.5	2	2	35	2SB1250/2SD1890			2SB1500/2SD2273
	90	4	<3	3	3	40	2SB1251/2SD1891			2SB1501/2SD2274
	100	5	<2.5	4	4	45	2SB1252/2SD1892			2SB1502/2SD2275
	110	6	<2.5	5	5	50			2SB1253/2SD1893	2SB1492/2SD2254
	130	6	<2.5	5	5	50		2SB1531/2SD2340		
	140	7	<2.5	6	6	70		2SB1493/2SD2255	2SB1254/2SD1894	2SB1490/2SD2250
	140	8	<2.5	7	7	100		2SB1469/2SD2221	2SB1255/2SD1895	2SB1503/2SD2276
	160	7	<3	7	7	120				2SB1645/2SD2554
	Equivalent circuit	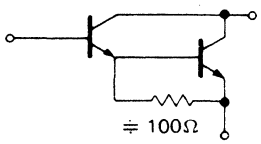 ≒ 100Ω Direct drive by IC is possible								

Complementary pair marked with " / " between products (Ex. 2SB1054/2SD1485)

Transistors (Selection Guide by Applications and Functions)

■ Switching Power Transistors

Application	V_{CBO} (V)	V_{CEO} (V)	I_C (A)	$V_{CE(sat)}$ (V)	I_C (A)	I_B (mA)	t_f (μs)	MT3 (D40)	MT4 (D41)	TO-220(a) (D52)	TO-220F(a) (D55)	N Type (D42)	I Type (D44)	U Type (D36)	TOP-3(a) (D60)	TOP-3F (D63)	TOP-3E (D65)	TOP-3L (D67)
								Package (No.)										
Switching	150/200/250	80	5	<1.6	5	1(A)	1				2SD1274/A/B							
	330	200	7	<1	5	500	0.75								2SD1680 ※			
	450	400	10	<1.2	4	800	1								2SC5278			
	500	400	2	<1	1	200	1	△2SC4986				2SC3403	2SC3825					
	500	400	10	<1	5	1A	1									2SC3210		
	500	400	10	<1	5	1A	1									2SC3171		
	500	400	15	<1	7	1.4A	1									2SC3527		
	500	400	20	<1	10	2A	1								2SC3850	2SC3528		
	800/900	500	1.5	<1	1	200	1				2SC3352/A							
	800/900	500	1.5	<1	1	200	1				2SC3794/A							
	800/900	500	5	<1	3	600	1				2SC3353/A							
	800/900	500	5	<1	3	600	1				2SC3795/A	2SC5145						
	800/900	500	5	<1	3	600	1									2SC3211		
	800/900	500	5	<1	3	600	1								2SC3796/A	2SC3798/A		
	800/900	500	7	<1	5	1A	1									2SC3212/A		
	800/900	500	7	<1	5	1A	1								2SC3797/A	2SC3799/A		
	850	650	5	<1.5	3	600	0.5									2SC3577		
	900	500	15	<1	8	1.6A	1											2SC3910
	900	800	1	<1.5	0.2	40	1				2SC4004							
	900	800/900	1	<1.5	0.2	40	1	△2SC4985	2SC4892			2SC3496/A	2SC3824/A			2SC4960		
	1000	800	3	<0.6	0.8	160	1				2SC3743					2SC4359		
	1000	800	3	<1.5	2	400	0.5									2SC3506	2SC5156	
	1000	800	5	<1.5	3	600	0.5									2SC3507	2SC5157 2SC5283	
	−400	−400	0.5	<−1.5	−0.2	−40	1				2SA1614		2SA1550	2SB1632				
	−400	−400	0.6	<−1	−0.3	−60	1				2SA1499	2SA1498	2SA1495	△2SA1868				
	−400	−400	5	<−1	−2	−400	1			2SA1500	2SA1501							
	−600	−600	−0.3	<−1	−0.15	−30	0.5						2SB1498					

△ Tentative

■ Switching Power Transistors (continued)

Application	V_{CBO} (V)	V_{CEO} (V)	I_C (A)	$V_{CE(sat)}$ (V)	I_C (A)	I_B (mA)	t_f (μs)	Package (No.) TO-220F(a) (D55)	TO-220E (D59)	TO-220D (D58)	N Type (D42)	TOP-3(a) (D60)	TOP-3F (D63)	TOP-3E (D65)	TOP-3L (D67)
High-speed switching	450	400	10	<1.2	4	800	1.0					2SC4768			
	500	400	2	<1	1	200	0.3	2SC3868			2SC5063				
	500	400	3	<1	1.5	300	0.3	2SC4533	2SC5032	2SC4953	2SC5104				
	500	400	5	<1	2	400	0.3	2SC3869							
	500	400	5	<1	2	400	0.3	2SC4026	2SC4961						
	500	400	7	<1	3	600	0.3	2SC3870	△ 2SC5217			2SC4687	2SC4621	2SC5160	
	500	400	7	<1	3	600	0.3	2SC4559	2SC5034						
	500	400	10	<1	5	1A	0.3	2SC3871					2SC3872	2SC5158	
	500	400	12	<1	7	1.4A	0.3						2SC3873		
	500	400	15	<1	10	2A	0.3								2SC3874
	800/900	500	1.5	<1	0.6	170	0.3	2SC3970/A	2SC5127						
	800/900	500	3	<1	1.2	350	0.3	2SC3971/A							
	800/900	500	5	<1	2	570	0.3	2SC3972/A	2SC5128						
	800	500	5	<1	3	600	1	2SC4638	△ 2SC5035						
	800/900	500	7	<1	4	800	0.3	2SC3973/A	2SC5077				2SC3974		
	800	500	10	<1	6	1.7A	0.3						2SC3975	2SC5281	2SC3976
	1000	500	5	<1	3	600	1			2SC4898					
	900/1000	800	1	<1.5	0.2	40	0.3	2SC3977/A	△ 2SC5036						
	900/1000	800	2	<1.5	0.5	100	0.3	2SC3978/A							
	900/1000	800	3	<1.5	0.8	160	0.3	2SC3979/A	△ 2SC5037				2SC4420	2SC5159	
	900/1000	800	4	<1.5	2	400	0.3						2SC3980/A	2SC5282	
	900/1000	800	5	<1.5	3	600	0.3						2SC3981/A		
	900/1000	800	10	<1.5	4	800	0.3								2SC3982/A
	1200	800	10	<1.5	4	800	0.3							△ 2SC5284	
	1500	500	10	<2.0	10	1A	4.0								2SC4528

△ Tentative

Transistors (Selection Guide by Applications and Functions)

■ Silicon Power Transistors for TV and CRT Monitors

Application	V_{CBO} (V)	I_C (A)	t_f max (μs)	Package (No.)								
				TO-220F(b) (D56)	TO-220(b) (D53)	TOP-3(b) (D61)		TOP-3F (D63※, D64)		TOP-3E (D65)		TOP-3L (D67)
							Built-in damper diodes		Built-in damper diodes		Built-in damper diodes	
Horizontal output	1200	10	0.3									2SC3738
	1400	0.3	1	2SC4152	2SC4576							
		10	0.5									2SC4096
	1500	1.5	0.8	2SD2310			2SD1727	2SD1735	2SD1844			
		1.5	1	2SD1734								
		2	1	2SD1575								
		2.5	0.8			2SD1479	2SD1728	2SD1576 2SD1736	2SD1845			
		3	0.8				2SD1439		2SD1541	2SD2511	2SD2510	
		3.5	0.8				2SD1729	2SD1737	2SD1846			
		4	0.8				2SD1441		2SD1632			
		5	0.8			2SD1391		2SD1577 2SD1738 2SD2329	2SD1847	2SD2513	2SD2512	
		6	0.8				2SD1731	2SD1739	2SD1848			
		7	0.5					2SD2354		2SC5163		
			0.8				2SD1732	2SD1850 2SD2330	2SD1849 2SD2057	2SD2515	2SD2514	
		10	0.5					2SD2355				
			0.6							2SC5164		2SC4111
			0.8							△2SC5166		
		12	0.2							2SC5270		
		15	0.5									△2SC5235
		16	0.3							2SC5380		2SC5381
		20	0.2							2SC5294		2SC5244
			0.5							2SC5165		
			0.8							△2SC5167		
	1700	2.5	0.8								2SD2521	
		6	0.8							2SC5389	2SD2523	
		10	0.2							△2SC5309		
		15	0.25									2SC5243

△ Tentative

■ Video-Output Hybrid-IC for CRT Monitors

● △UNC0101 Specifications

Parameter	Symbol	Conditions	min	typ	max	Unit
Recommended Power supply voltage	V_{CC}	—		80		V
Band width (−3dB)	fc	V_{CC} = 80V, CL = 10pF, V_{in} (DC) = 2.5V, $V_{out\ p\text{-}p}$ = 30V	100	110		MHz
DC voltage gain	G_V (DC)	—	16.5	17.5	18.5	—
3-ch total supply current	I_{CC} (DC)	V_{CC} = 80V, CL = 10pF, V_{in} (DC) = 2.5V, $V_{out\ p\text{-}p}$ = 50V, 100kHz square wave			60	mA
	I_{CC} (AC)				150	mA
Rise time transient response (10 to 90%)	tr			6.0		ns
Fall time transient response (10 to 90%)	tf			4.5		ns
Over shoot voltage	V_{OS}	With input-peaking		5		V

△ Tentative

Transistors (Selection Guide by Applications and Functions)

■ Power Transistor Arrays

Equivalent Circuit

I

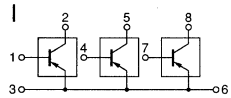

Example (NPN)

II

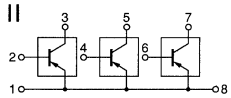

Example (PNP)

III

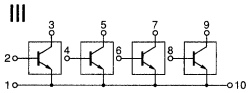

Example (NPN)

V

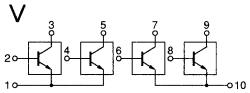

Example (NPN) (NPN)

VI

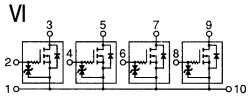

VII

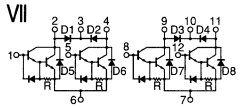

D1 ~ D4 : Fly back voltage absorption diode
D5 ~ D8 : Fly wheel diode

VIII

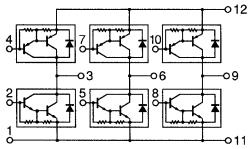

IX

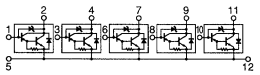

Series Name	PU3000 Series		PUA3000 Series	PU4000 Series				
Package (No.)	8-Pin ・SIL Package (D68)(D69)			10-Pin ・SIL Package (D70)				
Equivalent Circuit	I		II	III		V		
Structure / Application	NPN	PNP	PNP	NPN	PNP	NPN-NPN	PNP-PNP	NPN-PNP
General	PU3110	PU3210		PU4110	PU4210	PU4410	PU4510	PU4310
	PU3111	PU3211		PU4111	PU4211	PU4411	PU4511	PU4311
Low $V_{CE(sat)}$	PU3112	PU3212		PU4112	PU4212	PU4412	PU4512	PU4312
	PU3113	PU3213		PU4113	PU4213	PU4413	PU4513	PU4313
	PU3114	PU3214		PU4114	PU4214	PU4414	PU4514	PU4314
		PU3215			PU4215		PU4515	
General	PU3116	PU3216		PU4116	PU4216	PU4416	PU4516	PU4316
		PU3226						
			PUA3228					
High h_{FE}	PU3117			PU4117		PU4417		
	PU3118			PU4118		PU4418		
Darlington	PU3119	PU3219		PU4119	PU4219	PU4419	PU4519	PU4319
	PU3120	PU3220		PU4120	PU4220	PU4420	PU4520	PU4320
	△ PU3151			△ PU4151		△ PU4451		
	△ PU3152			△ PU4152		△ PU4452		
	△ PU3153			△ PU4153		△ PU4453		
	△ PU3154			△ PU4154		△ PU4454		
	△ PU3161			△ PU4161		△ PU4461		
	△ PU3162			△ PU4162		△ PU4462		
	△ PU3163			△ PU4163		△ PU4463		
	△ PU3164			△ PU4164		△ PU4464		
	PU3171			PU4171		PU4471		
	PU3173	PU3273		PU4173	PU4273	PU4473	PU4573	
Darlington with built-in zener	PU3121			PU4121			PU4421	
	PU3122			PU4122			PU4422	
	PU3123			PU4123			PU4423	
	PU3124			PU4124			PU4424	
								PU4325
				PU4126				
				PU4128				
	△ PU3131			△ PU4131		△ PU4431		
	△ PU3132			△ PU4132		△ PU4432		
	△ PU3133			△ PU4133		△ PU4433		
	△ PU3134			△ PU4134		△ PU4434		
	△ PU3135					PU4435		
	PU3136			PU4136		PU4436		
	PU3137			PU4137		PU4437		
	△ PU3138			△ PU4138		△ PU4438		
	PU3141			PU4141		PU4441		
	△ PU3142			△ PU4142		△ PU4442		
	△ PU3143			△ PU4143		△ PU4443		
	△ PU3144			△ PU4144		△ PU4444		
	PU3145					PU4445		
	PU3146					PU4446		
	△ PU3147			△ PU4147		△ PU4447		
	△ PU3148			△ PU4148		△ PU4448		
High-h_{FE} with built-in zener	PU3127			PU4127				
FET with built-in zener	N-Channel PU61C56							
FET								

△ Tentative

■ Power Transistor Arrays

PU7000 PU8000 Series	PU1000 Series		PUC4700 Series	Main Characteristics (T_a =25 ℃)											Remarks	
10-Pin SIL(D70)	12-Pin SIL(D71)														Basic Type	
VI	VII	VIII/IX														
N Channel	NPN-NPN	NPN-PNP	N Channel	I_C, * I_D (A)	V_{CBO}, * V_{DSS} (V)	V_{CEO}, * V_{GSS} (V)	V_{EBO} (V)	h_{FE} min	h_{FE} max	h_{FE} V_{CE} (V)	h_{FE} I_C (A)	$V_{CE(sat)}$ max (V)	$V_{CE(sat)}$ I_C (A)	$V_{CE(sat)}$ I_B (A)	NPN	PNP
				3/ −3	60/ −60	60/ −60	6/ −6	70	250	4/ −4	1/ −1	±1.2	3/ −3	0.375/ −0.375	2SD1266	2SB941
				4/ −4	60/ −60	60/ −60	5/ −5	70	250	4/ −4	1/ −1	±1.5	4/ −4	0.4/ −0.4	2SD1267	2SB942
				3/ −3	130/ −130	80/ −80	7/ −7	60	260	2/ −2	0.1/ −0.1	±0.5	2/ −2	0.1/ −0.1	2SD1268	2SB943
				4/ −3	130/ −130	80/ −80	7/ −7	60	260	2/ −2	0.1/ −0.1	±0.5	3/ −3	0.15/ −0.15	2SD1269	2SB944
				7/ −7	40/ −40	20/ −20	5/ −5	60	260	2/ −2	2/ −2	±0.6	5/ −5	0.16/ −0.16	2SD1444	2SB953
				−10	−40	−20	5	60	260	−2	−2	−0.6	−7	−0.23		2SB947
				2/ −2	200/ −200	150/ −150	6/ −6	60	240	10/ −10	0.15/ −0.15	±1	0.5/ −0.5	0.05/ −0.05	2SD1264	2SB940
				−2	−60	−60	−6	100	280	−4	−1	±2	−2	−0.2		2SB1052
				−2	−30	−30	−6	80	280	−4	−1	0.8	−1	−0.1		
				3	80	80	6	500	2500	4	0.5	1	2	0.05	2SD1273	
				1	200	150	6	500	2000	4	0.2	1	0.5	0.02	2SD1272	
				2/ −2	60/ −60	60/ −60	5/ −5	1000	10000	4/ −4	2/ −2	±2.5	2/ −2	8mA/ −8mA	2SD1275	2SB949
		PU1619		2.5/ −2.5	60/ −60	60/ −60	5/ −5	1000	10000	4/ −4	2/ −2	±2.8	2/ −2	8mA/ −8mA	2SD1275	2SB949
		PU1620		4/ −2	60/ −60	60/ −60	5/ −5	1000	10000	3/ −3	3/ −3	±2	2/ −3	12mA/ −12mA	2SD1276	2SB950
				2	60	60	5	1000	10000	4	1	25	2	8mA		
				3	60	60	5	1000	10000	4	1.5	2.5	3	12mA		
				4	60	60	5	1000	10000	4	2	2.5	4	16mA		
				8	60	60	5	1000	10000	4	4	2.5	8	32mA		
				2	200	200	5	1000	10000	4	0.7	2.5	1.5	6mA		
				3	200	200	5	1000	10000	4	1	2.5	2	8mA		
				4	200	200	5	1000	10000	4	1.5	2.5	3	12mA		
				8	200	200	5	1000	10000	4	3	2.5	6	24mA		
				3	150	100	8	2000	20000	2	1.5	1.5	1.5	1.5mA		
				4/ −4	150/ −150	100/ −100	5/ −5	1000	10000	4/ −4	2/ −2	2.5	4/ −4	16mA/ −16mA		
	PU1101			1.5	150	100	5	2000	15000	5	0.75	1.5	0.75	1.5mA		
		PU1501		2/ −4	100 ±15/ −80	100 ±15/ −80	5/ −5	1000	10000	4/ −3	2/ −3	±2.5	2/ −3	8mA/ −12mA		
		PU1601		4/ −4	100/ −100	100/ −100	5/ −5	1000	10000	4/ −4	2/ −2	±2.5	4/ −4	±16mA		
				2	30 ±5	30 ±5	5	1000	10000	4	2	2.5	2	8mA	2SD1322	
				4	30 ±5	30 ±5	5	1000	10000	3	3	2	3	12mA	2SD1323	
				2	60 ±10	50 ±10	5	1000	10000	4	2	2.5	2	8mA	2SD1325	
				4	60 ±10	60 ±10	5	1000	10000	3	3	−1.2	3	12mA	2SD1326	
				(NPN) 2	60 ±10	60 ±10	5	1000	10000	4	2	2.5	2	8mA	2SD1325	2SB941
				(PNP) 3	−60	−60	5	70	250	−4	−1	−1.2	−3	−0.375		
				2	100 ±15	100 ±15	5	1000	10000	4	2	2.5	2	8mA		
				4	100 ±15	100 ±15	5	1000	10000	3	3	2	3	12mA		
				2	60 ±10	60 ±10	5	1000	10000	4	1	2.5	2	8mA		
				3	60 ±10	60 ±10	5	1000	10000	4	1.5	2.5	3	12mA		
				4	60 ±10	60 ±10	5	1000	10000	4	2	2.5	4	16mA		
				5	60 ±10	60 ±10	5	1000	10000	4	4	2.5	8	32mA		
				2	60 ±10	60 ±10	5	1000	10000	4	1	2.5	2	8mA		
				3	60 ±10	60 ±10	5	1000	10000	4	1.5	2.5	3	12mA		
				4	60 ±10	60 ±10	5	1000	10000	4	2	2.5	4	16mA		
				8	60 ±10	60 ±10	5	1000	10000	4	4	2.5	8	32mA		
				2	100 ±15	100 ±15	5	1000	10000	4	1	2.5	2	8mA		
				3	100 ±15	100 ±15	5	1000	10000	4	1.5	2.5	3	12mA		
				4	100 ±15	100 ±15	5	1000	10000	4	2	2.5	4	16mA		
				8	100 ±15	100 ±15	5	1000	10000	4	4	2.5	8	32mA		
				2	100 ±15	100 ±15	5	1000	10000	4	1	2.5	2	8mA		
				3	100 ±15	100 ±15	5	1000	10000	4	1.5	2.5	3	12mA		
				4	100 ±15	100 ±15	5	1000	10000	4	2	2.5	4	16mA		
				8	100 ±15	100 ±15	5	1000	10000	4	4	2.5	8	32mA		
				3	35 ±5	35 ±5	6	500	2500	4	0.5	1.0	2	0.05		
PU7456				* 6	* 35 ±10	* ±20	I_{DSS} >10μA (V_{DS} =20V, V_{GS} =0)					V_{th} =2.5V (V_{DS} =25V, I_D −1mA)				
PUB4702				* ±1	* 35 ±10	* ±15	I_{DSS} >10μ A (V_{DS} =25V, V_{GS} =0)					t_{on} =120ns, t_f =390ns, t_d (off) =800ns				
PUB4701				* 3	150 *	* ±20	I_{DSS} >10μA (V_{DS} =120V, V_{GS} =0)					t_{on} =10ns, t_r =30ns, t_d (off) =290ns				
			PUC4701	* 2	80 *	* ±15	I_{DSS} >10μA (V_{DS} =64V, V_{GS} =0)					R_{on} <0.9 with flyback Diode				

Transistors (Selection Guide by Applications and Functions)

■ 5-Pin S-Mini Type (D8)•5-Pin Mini Type (D15)•6-Pin S-Mini Type (D9)•6-Pin Mini Type (D16) Package Transistor, FET

● Transistors (XN: 5- and 6-Pin Mini Type Package, XP: 5- and 6-Pin S-Mini Type Package)

Application	5-Pin S-Mini Type (D8), 5-Pin Mini Type (D15)								6-Pin S-Mini Type (D9), 6-Pin Mini Type (D16)						
	PNP ×2	NPN ×2	PNP+NPN	NPN ×2	PNP+NPN	PNP+NPN	PNP ×2	NPN ×2	PNP ×2	NPN ×2	PNP+NPN	NPN ×2	PNP+NPN	NPN ×2	PNP ×2
General-use	XN1401 XP1401	XN1501 XP1501	XN1601 XP1601		XN1B301 XP1B301	XN1C301 XP1C301	XN2401 XP2401	XN2501 XP2501	XN4401 XP4401	XN4501 XP4501	XN4601 XP4601	XN5501 XP5501	XN5601 XP5601		XN6401 XP6401
									XN4402	XN4502					
										XN4503					
									XN4482						
Low $V_{CE(sat)}$									XN4404	XN4504	XN4604				
		XN1504 XP1504													
										XN4506 XP4506					
General-use + Low $V_{CE(sat)}$											XN4608				
											XN4609				
										XN4505					
High frequency		XN1531 XP01531						XN2531				XN5531 XP05531			
															XN6435 XP6435
												XP05543			
		XN1509								XN4509					
Low Noise		XN1507 XP1507													
High freq. + General-use											XN4683 XP4683				
High h_{FE}										XN4556		XN5553 XP5553			
High-speed switching		XP1554		XP1E554							XP4654	XP05554		XP5A554	
												XP5555			

△ Tentative

Transistors (Selection Guide by Applications and Functions)

6-Pin S-Mini Type (D9), 6-Pin Mini Type (D16)			Main Characteristics												Basic Type	
NPN ×2	NPN ×2	PNP +NPN	V_{CBO} (V)	V_{CEO} (V)	I_C (A)	h_{FE}	V_{CE} (V)	I_C (mA)	V_{CE} (sat) typ (V)	I_C (A)	I_B (mA)	f_T typ (MHz)	V_{CB} (V)	I_E (mA)	PNP	NPN
XN6501 XP6501			±60	±50	±0.1	160 to 460	±10	±2	±0.3	±0.1	±10	80/150	−10 /10	1 / −2	B709A	D601A
			±60	±50	±0.5	85 to 340	±10	±150	±0.35	±0.3	±30	200	−10 /10	−50 /50	B710A	D602A
			25	20	0.5	65 to 350	2	500	0.2	0.5	20	150	10	−50		
			−60	−50	−0.1 / −0.5	160 to 460 /85 to 340	−10	−2/ −150	−0.3/ −0.35	−0.1 / −0.3	−10 / −30	80/200	−10	1	B709 /B710	
		XN7651	−15/25	−10 /20	−0.5 /0.5	100 to 350 /200 to 800	−2/2	−500 /500	−0.16 /0.13	−0.4 /0.5	−80 /20	130/200	−10 /10	50 / −50	B970	D1328
			50	20	0.3	500 to 2500	2	4	<0.1	0.03	3	80	6	−4		D1938
XN06506			50	20	0.3	500 to 2500	2	4	0.1	0.03	3	80	6	−4		D1915(F)
			−15 /60	−10 /50	−0.5 /0.1	100 to 350 /160 to 460	−2 /10	−500 /2	−0.16/0.3	−0.4 /0.1	−8 /10	130/150	−10 /10	50 / −2	B970	D601A
			−60/25	−50/20	−0.1 /0.5	160 to 460 /200 to 800	−10 /2	−2 /500	−0.3/0.13	−0.1 /0.5	−10 /20	80/200	−10 /10	1 / −50	B709A	D1328
			60/25	50/200	0.1/0.5	160 to 460 /200 to 800	10/2	2/500	0.3/0.13	0.1/0.5	10/20	150/200	10/10	2 / −50		D601A D1328
XP06531			15	10	0.05	75 to 400	4	5	0.5	0.02	4	1900	4	−5		C3130
XN6537			15	12	0.03	≧40	10	10	—	—	—	4500	10	−10		C3110
XP06545			30	20	0.05	≧25	10	2	0.1	0.01	1	1200	10	−15		C1215
			30	20	0.03	50 to 220	10	1	0.1	0.01	1	150	−10	1	A1022	
XN6534 XP6534			30	20	0.015	40 to 260	6	−1	—	—	—	650	6	−1		C2404
XN6542			45/30	35/20	0.05	20 to 100 /25 to 250	10	−10 / −15	0.5max/ —	0.02 / —	2/ —	500/1300	10	−10 / −15		C4444 C2480
XN6543			15	10	0.065	50 to 300	8	20	—	—	—	8500	V_{CE} 8V	I_C 20mA		C3904
			50	50	0.05	200 to 500	10	2	0.3max	0.01	1	250	10	−2		C4561
			150	150	0.05	90 to 450	5	10	1max	0.03	3	150	10	−10		D814
			−60/30	−50/20	−0.1 /0.015	160 to 460 /40 to 260	V_{CB} −10 /6	I_E −2 / −1	−0.3/ —	−0.1 / —	−10 / —	80/650	−10 /6	1 / −1	B709	C2404
			100	100	0.02	400 to 2000	10	2	0.05	0.01	1	150	10	−10		D1149
	XN6A554		−15/40	−15/40	−0.05 /0.1	50 to 150 /60 to 320	−1/1	−10 /10	−0.1/0.17	−10 /10	−1/1	1500/450	−10 /10	−10 /10	A1738	C3757
			25	V_{CES} 20	0.2	40 to 200	1	10	0.17	0.001	1	500	10	1		C4782

Transistors (Selection Guide by Applications and Functions)

● Transistors with built-in Resistor (XN: 5- and 6-Pin Mini Type Package, XP: 5- and 6-Pin S-Mini Type Package)

Application	5-Pin S-Mini Type (D8), 5-Pin Mini Type (D15)				6-Pin S-Mini Type (D9), 6-Pin Mini Type (D16)				
	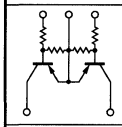	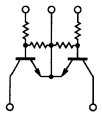	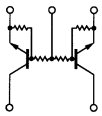	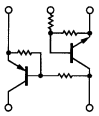	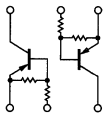	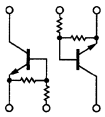	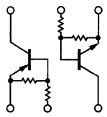	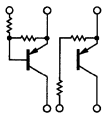	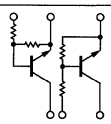
	PNP ×2	NPN ×2	NPN ×2	PNP +NPN	PNP ×2	NPN ×2	PNP +NPN	PNP ×2	NPN ×2
General-use switching Note: Mark " * " means one piece of R_2	XN1111 XP1111	XN1211 XP1211	XN2211 XP2211	XP03311	XN4111 XP4111	XN4211 XP4211	XN4311 XP4311	XN6111 XP6111	XN6211 XP6211
	XN1112 XP1112	XN1212 XP1212	XN2212	XN1A312 XP03312	XN4112 XP4112	XN4212 XP4212	XN4312 XP4312	XN6112 XP6112	XN6212 XP6212
	XN1113 XP1113	XN1213 XP1213			XN4113 XP4113	XN4213 XP4213	XP04313	XN6113 XP6113	XN6213 XP6213
	XN1114 XP1114	XN1214 XP1214			XN4114 XP4114	XN4214 XP4214	XN4314 XP4314	XN6114 XP6114	XN6214 XP6214
	* XN1115 * XP1115	* XN1215 * XP1215	* XN2215 * XP2215		* XN4115 * XP4115	* XN4215 * XP4215	* XN4315 * XP4315	* XN6115 * XP6115	* XN6215 * XP6215
	* XN1116 * XP1116	* XN1216 * XP1216	* XN2216		* XN4116 * XP4116	* XN4216 * XP4216	* XN4316 * XP4316	* XN6116 * XP6116	* XN6216 * XP6216
	* XN1117 * XP1117	* XN1217 * XP1217							
	XN1118 XP1118								
	XN1119 XP1119								
	* XN1110 * XP1110	* XN1210 * XP1210	* XN2210 * XP2210			* XN4210 * XP4210			XP6210
		XN121E XP0121E							
	XN111F XP111F	XN121F				XN421F			
	XN111H XP111H								
							XN431L		
	XN111M XP0111M	XN121M							
		XP0121N				XN421N	XP0431N		
								XN611FH XP611FH	
							XN4322		
	XN1101 XP1101	XN1201 XP1201							
					* XN4130				
							XN4381		
							XN04382		
				XP03383					
							XP04286		

Transistors (Selection Guide by Applications and Functions)

Main Characteristics								Basic Type	
V_{CBO} (V)	V_{CEO} (V)	I_C (A)	h_{FE} (min)	V_{CE} (V)	I_C (mA)	R_B (kΩ)	R_{BE} (kΩ)	PNP	NPN
50	50	0.1	≧35	10	5	10	10	UN2111	UN2211
			≧60			22	22	UN2112	UN2212
			≧80			47	47	UN2113	UN2213
			≧80			10	47	UN2114	UN2214
			≧160			10	∞	UN2115	UN2215
			≧160			4.7	∞	UN2116	UN2216
			≧160			22	∞	UN2117	UN2217
			≧20			0.51	5.1	UN2118	UN2218
			≧30			1	10	UN2119	UN2219
			≧160			47	∞	UN2110	UN2210
			≧60			47	22	UN211E	UN221E
			≧30			4.7	10	UN211F	UN221F
			≧30			2.2	10	UN211H	—
			≧20			4.7	4.7	UN211L	UN221L
			≧80			2.2	47	UN211M	UN221M
			≧80			4.7	47	UN211N	UN221N
			≧30			4.7/2.2	10	UN211F/H	—
50	50	0.5	≧50	10	100	4.7	4.7	UN2122	UN2222
40	40	0.03	≧80	10	5	10	500	UN5101	UN5201
15	10	0.5	100 to 350	2	500	—	10	2SB970 +R	—
50	50	0.5/0.1	≧50/ ≧80	10	100/5	4.7/47	4.7/47	UN2122	UN2213
50	50	−0.5/0.1	≧35/ ≧80	10	5	2.2/47	2.2/47	UN2121	UN2213
50	50	0.1	≧30/ ≧80	10	5	4.7/47	10/47	UN211F	UN2213
50	50	0.1	≧30/ ≧80	10	5	1/4.7	10/47	UN2119	UN221N

Transistors (Selection Guide by Applications and Functions)

● FET

Application	5-Pin Mini Type (D15)		Main Characteristics									Basic Type
	N-ch 2 elements	N-ch 2 elements	V_{DS} * V_{DSX} (V)	I_D (mA)	V_{th} (V)	V_{DS} (V)	I_D (μA)	I_{DSS} (mA)	gm (mS)	V_{DS} (V)	I_D (mA)	
Low noise amp. switching	XN1871	—	* 30	20	—	—	—	0.5 to 12	≧4	10	0.5	2SK198
	—	XN1872	50	100	1.5 to 3.5	V_{GS}	100	—	≧20	5	20	2SK621

Application	5-Pin Mini Type (D15)	6-Pin S-Mini Type (D9)	6-Pin Mini Type (D16)		Main Characteristics						Basic Type
	N-ch 2 elements	N-ch 2 elements	P-ch 2 elements	N-ch 2 elements	V_{DS} (V)	I_D (mA)	I_{DSS} (mA)	gm (mS)	V_{DS} (V)	I_D (mA)	
Low noise amp. switching	XN1D873/ XP1D873 *	—	—	—	50	20	2	≧1.8	10	1	2SK1103
Infra-red sensor	XN1D874/ XP1D874	—	—	—	−40	1	≦0.2	C_{ISS} /1pF	10	f =1MHz	2SK1842
	—	XP0D875 ☆	—	—	−30	1	≦0.2	C_{ISS} /1pF	10	f =1MHz	
For battery pack switching	—	—	△XN06776	—	V_{DSS} −50	−100	I_{DP} −200	—	—	—	△2SJ497
	—	—	—	△XN06877	V_{DSS} 50	100	I_{DP} 200	—	—	—	△2SK2863

* 5-Pin S-Mini Type (D8), ☆: High resistance resistor built-in △Tentative

● FETs +Transistors

Application	Type Name	Equivalent Circuit	Main Characteristics									Basic Type
Low noise amp. switching	XN8081*1 XP8081*2		Transistors	V_{CBO} (V)	V_{CEO} (V)	I_C (A)	h_{FE}	V_{CE} (V)	I_C (A)	R_B (KΩ)	R_{BE} (KΩ)	UN2213
				50	50	0.1	≧80	10	5	47	47	
			FET	V_{GDS} (V)	I_D (A)	I_{DSS} (mA)	gm (mS)			V_{DS} (V)	I_D (mA)	2SK1103
				−50	0.02	2	≧1.8			10	1	

* 1 6-Pin Mini Type (D16), * 2 6-Pin S-Mini Type (D9)

■ Transistor Arrays

● Small Signal Transistor Arrays

Appli-cation	Type No.	Polarity	V_{CEO} (V)	I_C (A)	h_{FE}	V_{CE} (V)	I_C (A)	$V_{CE(sat)}$ max (V)	I_C (A)	I_B (mA)	Package (No.)	
Motor drive	UN206	PNP ×2/NPN ×2	−18/18	−1/1	90 to 360	−2/2	−0.5/0.5	−0.2/0.2	−0.3/0.3	−10/10	SO-10C	(D74)
	UN216	PNP ×3/NPN ×3	−10/10	−3/3	200 to 800	−1/1	−0.5/0.5	−0.45/0.25	−2/2	−50/50	SO-14	(D75)
	UN217	PNP ×3/NPN ×3	−10/10	−1/1	200 to 800	−1/1	−0.5/0.5	−0.3/0.3	−1/1	−30/30	SO-10C	(D74)
	UN223	PNP ×2/NPN ×3	−50/50	−1/1	85 to 340	−10/10	−0.5/0.5	−0.4/0.4	−0.5/0.5	−50/50	SO-14	(D75)
	UN225	PNP ×4/NPN ×4	−10/10	−0.5/0.5	200 to 800	−2/2	−0.2/0.2	−0.2/0.2	−0.2/0.2	−2/2	SO-16	(D76)
	UN227	PNP ×4/NPN ×4	−10/10	−1.5/1.5	200 to 700	−1/1	−0.4/0.4	−0.35/0.25	−1/1	−25/25	SO-16	(D76)
	UN228	PNP ×2 +NPN ×2	−10/10	−1/1	200 to 800	−1/1	−0.5/0.5	−0.3/0.3	−1/1	−30/30	SO-10C	(D74)
	UN230	PNP ×2 +NPN ×2	−10/10	−3/3	200 to 700	−1/1	−0.5/0.5	−0.45/0.25	−2/2	−50/50	SO-10C	(D74)
	△UNA0231	PNP ×3	−13	−1	200 to 450	−2	−0.1	−0.3	−0.5	−10	SO-14	(D75)
	△UNA0232	NPN ×4	10	1	200 to 700	1	0.5	0.15	0.5	25	SO-10C	(D74)
	△UNA0233	PNP ×3/NPN ×3	−10/10	−0.5/0.5	200 to 450 200 to 800	−2/2	−0.1/0.2	−0.4/0.4	−1/1	−25/25	SO-14	(D75)
	XN7651	PNP(2SB970) NPN(2SD1328)	−10/20	−0.55/0.55	100 to 350 200 to 800	−2/2	−0.5/0.5	−0.22/0.2	−0.4/0.5	−8/20	6-Pin Mini Type	(D16)

△ Tentative

● Small Signal Transistor Arrays (continued)

Equivalent circuit

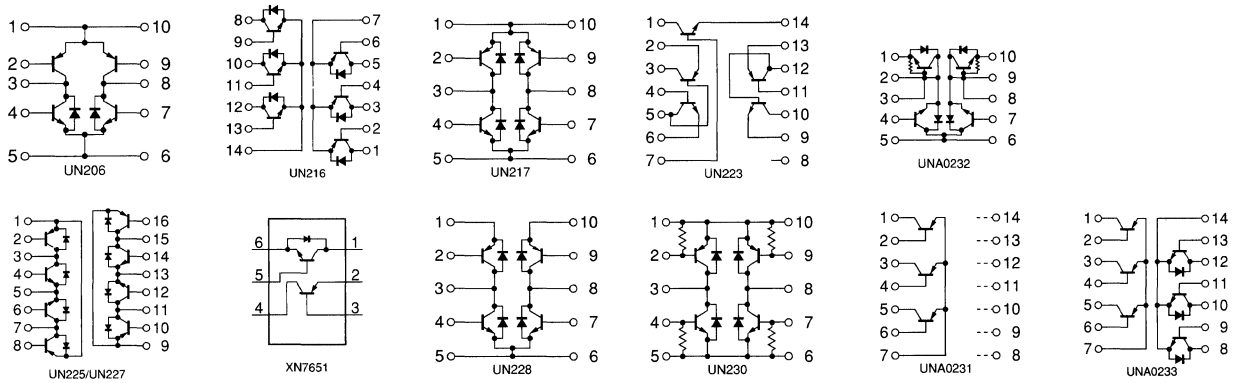

■ Composite Transistors

● 6-Pin Mini-Power Type (D20): Diode +Transistors, Transistors, Built-in Resistor Transistors

Application Functions	Type No.	Transistor Chip Name	V_{CEO} (V)	I_C (A)	$V_{CE(sat.)}$ typ (V)	I_C (A)	I_B (mA)	h_{FE}	I_C (mA)	V_{CE} (V)	Internal Wiring
DC-DC converter	UN601	2SA1674	−80	−1	−0.2	−0.5	−50	120 to 340	−100	−2	①
		Diode	V_{RRM}	I_F	V_F	I_F		I_R	V_R		
		MA720	40V	0.5A	max0.55V	0.5A		max100 μA	35V		
	UN602	M253L	−11	−3	−0.22	−1.5	−30	140 to 560	−500	−2	①
		Diode	V_{RRM}	I_F	V_F	I_F		I_R	V_R		
		B3B07	30V	0.7A	max0.55V	0.7A		max80 μA	15V		
	UN603	2SA1674 ×2	−80	−1	−0.2	−0.5	−50	120 to 340	−100	−2	②
Camera	UN604	M261L	−10	−1.5	−0.24	−1	−25	200 to 700	−400	−1	③
		M262L	10	1.5	0.17	1	25	200 to 700	400	1	
	UN801	UN1119 (R_1 1k Ω R_2 10k Ω)	−50	−0.1	−0.1	−0.01	−0.3	≧30	−5	−10	④
		2SD1119	25	3	0.3	3	100	180 to 600	500	2	

Equivalent circuit

①

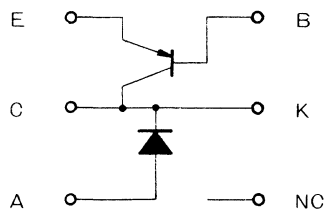

②

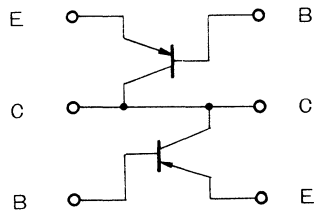

③

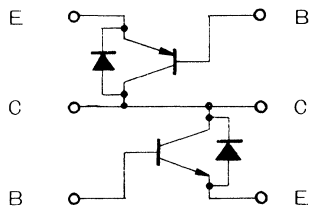

④

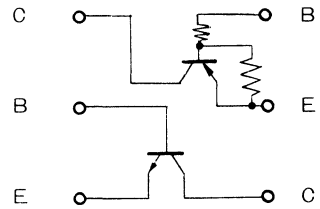

■ Transistor with built-in Resistor Series (For Digital Circuits, etc.)

Series Name		UN1000		UN2000		UN4000		UN5000		UN6000		UN7000	UN8000		UN9000		Main Characteristics (Ta = 25 ℃)				
Pakage (No.)		M Type(D35)		Mini Type(D12)		New S Type(D34)		S-Mini Type(D5)		MT1 Type(D37)		Mini-Power Type (D19)	MT2 Type(D38)		SS-Mini Type(D1) SS-Mini Flat-Lead Type (D1)						
Resistance value		(P_C = 400mW, 600mW*1 1W*2)		(P_C = 200mW)		(P_C = 300mW)		(P_C = 150mW)		(P_C = 400mW, 600mW*1)		(P_C = 1W)	(P_C = 1W)		(P_C = 125mW)		V_{CEO} (V)	I_C (mA)	h_{FE} min	V_{CE} (V)	I_C (mA)
R_B (k Ω)	R_{BE} (k Ω)	PNP	NPN	PNP	NPN	PNP	NPN	PNP	NPN	PNP	NPN	NPN	PNP	NPN	PNP	NPN					
10	10	UN1111	UN1211	UN2111	UN2211	UN4111	UN4211	UN5111	UN5211	UN6111	UN6211	—	—	—	UN9111	UN9211	50 / −50	100 / −100	35	10 / −10	5 / −5
22	22	UN1112	UN1212	UN2112	UN2212	UN4112	UN4212	UN5112	UN5212	UN6112	UN6212	—	—	—	UN9112	UN9212			60		
47	47	UN1113	UN1213	UN2113	UN2213	UN4113	UN4213	UN5113	UN5213	UN6113	UN6213	—	—	—	UN9113	UN9213			80		
10	47	UN1114	UN1214	UN2114	UN2214	UN4114	UN4214	UN5114	UN5214	UN6114	UN6214	—	—	—	UN9114	UN9214			80		
10	∞	UN1115	UN1215	UN2115	UN2215	UN4115	UN4215	UN5115	UN5215	UN6115	UN6215	—	—	—	UN9115	UN9215			160		
4.7	∞	UN1116	UN1216	UN2116	UN2216	UN4116	UN4216	UN5116	UN5216	UN6116	UN6216	—	—	—	UN9116	UN9216			160		
22	∞	UN1117	UN1217	UN2117	UN2217	UN4117	UN4217	UN5117	UN5217	UN6117	UN6217	—	—	—	UN9117	UN9217			160		
0.51	5.1	UN1118	UN1218	UN2118	UN2218	UN4118	UN4218	UN5118	UN5218	UN6118	UN6218	—	—	—	UN9118	UN9218			20		
1	10	UN1119	UN1219	UN2119	UN2219	UN4119	UN4219	UN5119	UN5219	UN6119	UN6219	—	—	—	UN9119	UN9219			30		
47	∞	UN1110	UN1210	UN2110	UN2210	UN4110	UN4210	UN5110	UN5210	UN6110	UN6210	—	—	—	UN9110	UN9210			160		
47	10	UN111D	UN121D	UN211D	UN221D	UN411D	UN421D	UN511D	UN521D	UN611D	UN621D	—	—	—	UN911D	UN921D			30		
47	22	UN111E	UN121E	UN211E	UN221E	UN411E	UN421E	UN511E	UN521E	UN611E	UN621E	—	—	—	UN911E	UN921E			60		
4.7	10	UN111F	UN121F	UN211F	UN221F	UN411F	UN421F	UN511F	UN521F	UN611F	UN621F	—	—	—	UN911F	UN921F			30		
2.2	10	UN111H	—	UN211H	—	UN411H	—	UN511H	—	UN611H	—	—	—	—	UN911H	—			30		
10	4.7	—	UN121K	—	UN221K	—	UN421K	—	UN521K	—	UN621K	—	—	—	—	UN921K			20		
4.7	4.7	UN111L	UN121L	UN211L	UN221L	UN411L	UN421L	UN511L	UN521L	UN611L	UN621L	—	—	—	UN911L	UN921L			20		
2.2	47	—	—	UN211M	UN221M	—	—	UN511M	UN521M	—	—	—	—	—	—	UNR921M			80		
4.7	47	—	—	UN211N	UN221N	—	—	UN511N	UN521N	—	—	—	—	—	—	UNR921N			80		
100	100	—	—	—	—	—	—	—	—	—	—	—	—	—	△ UNR911AJ	△ UNR921AJ			80		
100	∞	—	—	—	—	—	—	—	—	—	—	—	—	—	△ UNR911BJ	△ UNR921BJ			160		
∞	47	—	—	—	—	—	—	—	—	—	—	—	—	—	△ UNR911CJ	△ UNR921CJ			80		
22	47	—	—	UN211T	UN221T	—	—	UN511T	UN521T	—	—	—	—	—	—	—			80		
2.2	2.2	—	—	UN211V	UN221V	—	—	UN511V	UN521V	—	—	—	—	—	—	—			6		
4.7	22	—	—	UN211Z	UN221Z	—	—	UN511Z	UN521Z	—	—	—	—	—	—	—			60		
2.2	2.2	UN1121*1	UN1221*1	UN2121	UN2221	UN4121	UN4221	—	—	UN6121*1	UN6221*1	—	—	—	—	—	50 / −50	500 / −500	40	10 / −10	100 / −100
4.7	4.7	UN1122*1	UN1222*1	UN2122	UN2222	UN4122	UN4222	—	—	UN6122*1	UN6222*1	—	—	—	—	—			50		
10	10	UN1123*1	UN1223*1	UN2123	UN2223	UN4123	UN4223	—	—	UN6123*1	UN6223*1	—	—	—	—	—			60		
2.2	10	UN1124*1	UN1224*1	UN2124	UN2224	UN4124	UN4224	—	—	UN6124*1	UN6224*1	—	—	—	—	—			60		
0.27	5.0	UN112X*1	—	UN212X	—	UN412X	—	—	—	UN612X	—	—	—	—	—	—			20		
3.1	4.6	UN112Y*1	—	UN212Y	—	UN412Y	—	—	—	UN612Y	—	—	—	—	—	—			50		
10		—	—	—	—	—	—	—	UNR5225	—	—	—	—	—	—	—	20	600	100	5	50
4.7		—	—	—	—	—	—	—	UNR5226	—	—	—	—	—	—	—			100		
6.8		—	—	—	—	—	—	—	UNR5227	—	—	—	—	—	—	—			70		
1	47	—	UN1231*2	—	—	—	—	—	—	—	—	UN7231	—	UN8231	—	—	20	700	800	10	150
1	47	—	UN1231A*2	—	—	—	—	—	—	—	—	—	—	UN8231A	—	—	50	700	800	10	150
10	47	—	—	UN2154	—	—	—	UN5154	—	—	—	—	—	—	—	—	−30	−100	80	−10	−5
Equivalent circuits		(PNP Type) 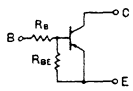										(NPN Type) 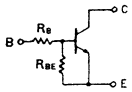									

■ Silicon Junction FETs

Application	Package (No.)						Absolute Maximum Ratings (Ta =25 ℃)		Electrical Characteristics (Ta =25 ℃)			
	SS-Mini Type (D1)	S-Mini Type (D5)	Mini Type (D12)	Flat-Mini Type (D80)	New S Type (D34)	TO-92 (D46)	V_{DSO} * V_{GDS} (V)	I_D (mA)	V_{DS} (V)	NV ※NF max * typ (mV)	gm min * typ (mS)	I_{DSS} max (mA)
General-use low frequency amplifier		2SJ364	2SK1103 2SJ163		2SK1104 2SJ164		* −65 65	20 −20	− −	− −	2.5 2.5	6 −6
General-use	2SK2593	2SK662 2SK663	2SK198 2SK374			2SK301	−30 −55	20 30	30 10	* 60 * ※2.5dB	4 2.5	12 20
Capacitor microphone			2SK123	2SK1860	2SK65[1)]		20 −12	2 2	4.5 4.5	0.004 0.004	1.6 0.5	0.4 0.8
Infrared sensor	2SK2380		2SK1842 2SK2751				V_{GDO} −40 * −40	1 10	10 −	Ciss * 1pF −	− 2.5	0.2 3.7
Switching			△2SJ497[2)] △2SK2863[2)]				V_{DSS} −50 V_{DSS} 50	−100 100	−	−	−	−0.1 0.1

△Tentative 1) S Type Package 2) Composite 2 Elements

■ Silicon MOS FETs

● For High Frequency

Application	Type No.	Absolute Maximum Ratings (Ta =25 ℃)			Electrical Characteristics (Ta =25 ℃)						Package	
		V_{DS} (V)	V_{G1S} V_{G2S} (V)	P_D (mW)	PG typ (dB)	NF typ (dB)	PG, NF Conditions					
							V_{DS} (V)	V_{G2S} (V)	I_D (mA)	f (GHz)		No.
VHF RF-Amp.	3SK144	15	±8	150	23	<2.0	8	8	3	0.2	Mini Type (4 pins)	D13
	3SK219	15	±8	150	21.5	<2.5	8	3	8	0.2	Mini Type (4 pins)	D13
	3SK268	15	±8	150	20	<3.0	8	3	8	0.2	S-Mini Type (4 pins)	D6
	3SK286	15	±8	150	23	<2.5	8	3	8	0.2	Mini Type (4 pins)	D13
	△3SK301	15	±8	150	25.5	2.3	3.5	3.0	8	0.2	Mini Type (4 pins)	D13
	△3SK305	15	±8	150	25.5	2.3	3.5	3.0	8	0.2	S-Mini Type (4 pins)	D6
	△3SK303	15	±8	150	23	2.7	8.0	3.0	8	0.2	Mini Type (4 pins)	D13
	△3SK307	15	±8	150	23	2.7	8.0	3.0	8	0.2	S-Mini Type (4 pins)	D6
UHF RF-Amp.	3SK143	15	±8	200	15	<5.0	8	3	8	0.8	Mini Type (4 pins)	D13
	3SK285	13	±8	150	18.5	<3.0	6	4	8	0.8	Mini Type (4 pins)	D13
	△3SK302	15	±8	150	17.5	2.2	3.5	3.0	8	0.8	Mini Type (4 pins)	D13
	△3SK306	15	±8	150	17.5	2.2	3.5	3.0	8	0.8	S-Mini Type (4 pins)	D6
	△3SK304	15	±8	150	17	2.2	8.0	3.0	8	0.8	Mini Type (4 pins)	D13
	△3SK308	15	±8	150	17	2.2	8.0	3.0	8	0.8	S-Mini Type (4 pins)	D6
VHF, CATV RF-Amp.	3SK192	15	±8	150	17	<4.5	8	3	8	0.5	Mini Type (4 pins)	D13
	3SK227	15	±8	200	20.5	2.5	6	4	8	0.8	Mini Type (4 pins)	D13
	3SK269	15	±8	150	18.5	2.2	6	4	8	0.8	S-Mini Type (4 pins)	D6
	3SK270	15	±8	150	15.5	2.8	6	4	8	0.5	S-Mini Type (4 pins)	D6
	3SK271	15	±8	150	20.5	2.5	6	4	8	0.8	S-Mini Type (4 pins)	D6

△Tentative

■ Silicon MOS FETs

● For Small Signal

Application	Structure	Type No.	Absolute Maximum Ratings (Ta =25 ℃)				Electrical Characteristics (Ta =25 ℃)				Package	
			V_{DS} * V_{DSS} (V)	V_{GSO} (V)	I_D (A)	P_D (mW)	gm min typ* (mS)	R_{DS} (on) typ (Ω)	t_{on} max typ* (ns)	t_{off} max typ* (ns)		No.
Digital/ analog switching	N-ch	2SK601	80	20	0.5	1000	* 300	2	* 15	* 20	Mini-Power Type	D19
		2SK614	80	20	0.5	750	* 300	2	* 15	* 20	TO-92	D46
		2SK615	80	20	0.5	1000	* 300	2	* 15	* 20	M Type	D35
		2SK620	50	8	0.1	150	20	40	10	20	Mini Type (3 pins)	D12
		2SK655	50	8	0.1	200	20	40	10	20	New S-Type	D34
		2SK656	50	8	0.1	200	20	40	1000	1000	New S-Type	D34
		2SK657	50	8	0.1	400	20	40	10	20	M Type	D35
		2SK664	50	8	0.1	150	20	40	10	20	S-Mini Type (3 pins)	D5
		2SK665	20	8	0.1	150	20	40	1000	1000	S-Mini Type (3 pins)	D5
		2SK1228 ※	50	10	0.05	150	* 39	27	2000	2000	Mini Type (3 pins)	D12
		2SK1374 ※	50	10	0.05	150	* 39	27	2000	2000	S-Mini Type (3 pins)	D5
	P-ch	2SJ146	* −50	−8	−0.1	150	13	<150	40	60	Mini Type (3 pins)	D12

※2.5V Drive

● For Medium Output

Application		Type No.	Absolute Maximum Ratings (Ta =25 ℃)				Electrical Characteristics (Ta =25 ℃)					Package	
			V_{DS} (V)	V_{GSS} (V)	I_D (A)	P_D (W)	R_{DS} (on) max (Ω)	$\lvert Y_{fs} \rvert$ typ (S)	t_{on} (ns)	t_f (ns)	td(off) (ns)		No.
Switching	P-ch	2SJ0398	−30	±15	−2	1	0.5	>1.5	60	280	280	U Type	D36
	N-ch	2SK2014	100	±20	1	10 *	1	>1.0	38	330	90	U Type	D36
		2SK2015	150	±20	3	10 *	1.3	3.4	24	36	90	U Type	D36
		2SK2016	100	±20	5	10 *	0.6	3.8	26	38	84	U Type	D36
		2SK2211	30	±20	1	1	0.75	>0.5	12	160	60	Mini-Power (3 pins)	D19
		2SK2276	60	±20	5	10 *	0.2	4.0	29	53	97	U Type	D36
		2SK2277	60	±20	1	1	1	>0.5	35	80	130	Mini-Power (3 pins)	D19
		2SK2342	30	±15	2	10*	0.45	>1.0	40	100	180	U Type	D36
		2SK2474	250	±30	2	10*	1.2	1.0	30	45	90	U Type	D36
		2SK2495	250	±30	2	30	1.2	1.0	30	45	90	N Type	D42
		△2SK2660	200	±30	2	10*	3.5	1.0	20	15	20	U Type	D36
		△2SK2537	400	±20	0.2	0.5	2.5	0.2	50	100	—	Mini-Power (3 pins)	D19
		△2SK2772	235	±30	4	10*	1.3	1.6	30	50	20	U Type	D36
		△2SK2797	200	±30	2	10*	typ 2.1	1.0	10	15	20	U Type	D36

* T_C =25 ℃ △Tentative

■ Power F-MOS FET

Package (Package No.)									V_{DSS} (V)	V_{GSS} (V)	I_D (A)	$R_{DS(on)}$ max (Ω)	Y_{fs} typ (S)	t_{on} typ (ns)	t_f typ (ns)	$t_{d(off)}$ typ (ns)
I Type (D44)	N Type (D42)	MT4 (D41)	TO-220F(a) (D55)	TO-220E (D59)	TOP-3(a) (D60)	TOP-3F(a) (D63)	TOP-3E (D65)	TOP-3L (D67)								
		2SK1868	2SK1255	2SK2578					60	±20	5	0.2	4.0	29	53	97
				2SK2579							10	0.11	7.1	46	95	235
	2SK1967		2SK1033	2SK2574							20	0.07	13	90	180	360
		2SK2659									15					
				2SK2580							40	0.035	22	200	320	690
								2SK1259			100	0.016	45	420	700	1200
								2SK1635			50	0.023	25	380	430	300
			2SK1214						80		20	0.09	10	60	110	330
	2SK2339								80 ±10	±15	10	0.023	5.5	500	900	1900
				△2SK2581					100	±20	5	0.47	3.8	26	38	84
				2SK2575							15	0.135	9	50	85	300
				2SK2577							30	0.07	20	130	190	700
				2SK2588					150		3	1.1	3.4	24	36	96
			2SK1035								12	0.3	8.5	50	100	320
			2SK1266								20	0.12	20	90	80	770
			2SK2377						170		20	0.145	17	td(on)10	280	1500
2SK963	△2SK2790		2SK758						250		5	0.7	3	30	45	90
			2SK1478	2SK2122							8	0.6	4.7	72	44	136
			2SK1036	2SK2576							10	0.3	6.5	60	80	240
	2SK2538									±30	2	2	1	10	45	90

△Tentative

■ Power F-MOS FET (continued)

Package (Package No.)									V_{DSS} (V)	V_{GSS} (V)	I_D (A)	$R_{DS(on)}$ max (Ω)	Y_{fs} typ (S)	t_{on} typ (ns)	t_f typ (ns)	$t_{d(off)}$ typ (ns)
I Type (D44)	N Type (D42)	MT4 (D41)	TO-220F(a) (D55)	TO-220E (D59)	TOP-3(a) (D60)	TOP-3F(a) (D63)	TOP-3E (D65)	TOP-3L (D67)								
						2SK1406			500	±20	20	0.4	12	150	140	480
						△2SK2572					15	0.5	8	110	100	330
			2SK1605	2SK2123					450	±30	5	1.3	3.2	70	35	80
			2SK1606	2SK2124							8	0.75	5	70	50	150
					2SK1607	2SK2032	2SK2571				13	0.45	8	110	90	220
	2SK2509		2SK1833	2SK2125					500		2.5	4.0	1.5	40	30	55
			2SK1608	2SK2126							5	1.7	3.5	60	40	80
			2SK1609	2SK2127							8	1.0	5	100	60	140
					2SK1610		2SK2383				13	0.6	8	100	90	210
							△2SK2573				20	0.4	12	150	140	480
2SK2047									550		1.2	8.0	0.65	td(on)15	30	70
				2SK2323					600		1	8.5	0.54	td(on)20	30	90
				2SK2324							2	6.0	0.85	td(on)20	30	60
				2SK2325							3	2.5	2.5	td(on)30	40	150
				2SK2326							5	1.8	2.8	td(on)40	80	280
							2SK2327				10	0.75	6	td(on)50	100	400
	2SK1980		2SK1834	2SK2128					800		2	7.0	1.1	35	25	60
	2SK1846		2SK1611	2SK2129							3	4.0	2.4	40	35	105
				2SK2210					750		4	2.4	2.2	td(on)25	65	170
		2SK1867	2SK1612	2SK2130					900		3	5.0	2.2	40	35	105
				2SK2340	2SK1613		2SK2374				5	2.8	3.5	90	60	170
					2SK1614	2SK1803	2SK2375				8	1.7	5.5	100	80	250

△Tentative

■ Power F-MOS FETs Line-up (V_{GS} =10V)

V_{DSS} (V) / I_D (A)	60	80	100	150	170	250	450	500	550	800	900
1	2SK2277 Mini-Power1.0		2SK2014 U Type1.0						★2SK2047 I Type $_{8.0}$ (I_D =1.2A)		
2						2SK2538 220F$_{2.0}$				★2SK1834 220F$_{7.0}$ ★2SK1980 N Type $_{7.0}$ ★△2SK2128 220E$_{7.0}$	
2.5						★△2SK2125 220E$_{4.0}$		★2SK1833 220F$_{4.0}$ ★2SK2509 N			
3				2SK2015 U Type 0.7 2SK2588 220E$_{1.1}$				2SK766 220F$_{3.6}$		★2SK1611 220F$_{4.0}$ ★2SK1846 N Type $_{3.7}$ ★△2SK2129 220E$_{4.0}$	★2SK1612 220F$_{5.0}$ ★△2SK2130 220E$_{5.0}$
4										★2SK2210 220E$_{3.5}$	
5	2SK1255 220F$_{0.2}$ 2SK2578 220E$_{0.2}$ 2SK2276 U Type$_{0.2}$		2SK2016 U Type$_{0.3}$ △2SK2581 220E$_{0.47}$			2SK758 220F$_{0.7}$ 2SK963 I Type$_{0.7}$ △2SK2790 N Type$_{0.7}$	★2SK1605 220F$_{1.3}$ ★△2SK2123 220E$_{1.3}$	★2SK1608 220F$_{1.0}$ ★△2SK2126 220E$_{1.7}$			★2SK1613 TOP-3$_{2.8}$ 2SK2340 220E$_{2.8}$ 2SK2374 TOP-3E$_{2.8}$
8						2SK1478 220F$_{0.6}$ ★△2SK2122 220E$_{0.6}$	★2SK1606 220F$_{0.75}$ ★△2SK2124 220E$_{0.75}$	★2SK1609 220F$_{1.0}$ ★△2SK2127 220E$_{1.0}$			★2SK1614 TOP-3$_{1.7}$ 2SK2375 TOP-3E$_{1.7}$
10	2SK2579 220E$_{0.11}$					2SK1036 220F$_{0.3}$ 2SK2576 220E$_{0.3}$					
12				2SK1035 220F$_{0.32}$							
13							★2SK1607 TOP-3$_{0.45}$ ★2SK2571 TOP3E$_{0.45}$ ★2SK2032 TOP-3F$_{0.45}$	★2SK1610 TOP-3$_{0.6}$ 2SK2383 TOP-3E$_{0.6}$			
15	2SK2659 MT4$_{0.07}$		2SK2575 220E$_{0.135}$					2SK1331 TOP-3F$_{0.5}$ △2SK2572 TOP-3E$_{0.5}$			
20	2SK1033 220F$_{0.07}$ 2SK2574 220E$_{0.07}$ 2SK1967 N Type$_{0.07}$	2SK1214 220F$_{0.1}$		2SK1266 220F$_{0.12}$	★2SK2377 220F$_{0.45}$			2SK1406 TOP-3F$_{0.4}$ △2SK2573 TOP-3E$_{0.4}$			
25				2SK1267 TOP-3$_{0.11}$							
30			2SK2577 220E$_{0.07}$								
40	2SK2580 220E$_{0.035}$										
50	2SK1635 TOP-3L$_{0.03}$										
100	2SK1259 TOP-3L$_{0.016}$										

△Tentative

Note) Under Type No. in the list indicates package symbol. The numerical value of small letter means Max Value (Ω) of R_{DS} (on)

★ High Avalanche-Energy-proof

(Package Symbol) 220E: TO-220E, 220F: TO-220F

FET, IGBT, IPD

■ IGBTs

Application	Type No.	Absolute Maximum Ratings			Electrical Characteristics					Packge	
		V_{CES} (V)	I_C (A)	I_C (peak) (A)	V_{CE} (sat) (V)	I_C (mA)	td (on) (ns)	td (off) (ns)	tf (ns)		No.
Strobo	2PG301	400	20	130	<2.25	20	25	250	2	N Type	D43
	2PG302	400	5	130	<2	5A	25	300	1	I Type	D45
	2PG351	400	5	130	<2	5A	35	550	1	I Type	D45
	2PG352	400	5	150	<2	5A	35	550	1	I Type	D45
	△2PG401	400	5	130	<2	5A	—	—	—	I Type	D45

△Tentative

■ IPDs (Intelligent Power Device)

Application	Type No.	Output Wattage	Input Power Supply Voltage		Output Characteristics	Operating Frequency	Main Features	Package	
			Primary winding	Aux. winding					No.
<Multi-pin type> Switching power supply AC adaptor Battery charger	MIP103	10W	35V to 400V	9.9V to 35V	V_{DSS} = 650V R(on) = 9.5Ω typ I_{OP} = 0.9A	500kHz	●Pulse-by-pulse over-current controlling ●Thermal protection circuit ●ON/OFF remote control ●OVP latch circuit ●Intermittent operation timer	HSOP-24D Type	D82
	MIP106	10W	35V to 400V	8V to 45V	V_{DSS} = 650V R(on) = 9.5Ω I_{OP} = 1.2A	750kHz	●Pulse-by-pulse over-current controlling ●Thermal protection circuit (Over-current external setting) ●ON/OFF remote control ●OVP latch circuit ●Intermittent operation timer	HSOP-24D Type	D82
	MIP115	15W	35V to 400V	8V to 45V	V_{DSS} = 650V R(on) = 6.5Ω I_{OP} = 1.5A	750kHz	●Same function as MIP106	HSOP-24D Type	D82
	MIP108	20W	35V to 400V	8V to 45V	V_{DSS} = 650V R(on) = 3.8Ω I_{OP} = 2A	750kHz	●Same function as MIP 106	HSOP-24D Type	D82
	MIP109	5W	35V to 450V	8V to 45V	V_{DSS} = 650V R(on) = 17Ω typ I_{OP} = 600mA	750kHz	●Same function as MIP 106 (Differing in the OVP method) ●Bias voltage fall detecting function	HSOP-24D Type	D82
	MIP111	15W	35V to 450V	8V to 45V	V_{DSS} = 650V R(on) = 6.5Ω typ I_{OP} = 1.5A typ	750kHz	●Same function as MIP 109	HSOP-24D Type	D82
Switching power supply Fixed power supply	MIP102	3W	36V to 350V	8.5V to 9.6V	V_{DSS} = 350V R(on) = 12Ω I_{OP} = 460mA	800kHz	●Pulse-by-pulse over-current controlling ●Thermal protection circuit ●ON/OFF remote control ●Amplifier circuit	SOP-28D	D81

Application	Type No.	Input Voltage	Output Wattage	Output Characteristics				Main Features	Package (3-Pin Type)	No.
				Control	V_{DSS}	I_{DP} (Fixed)	f_{SW} (Fixed)			
<3-pin type> Switching Power Supply	MIP160/170	85 to 264V_{AC}	5W	Voltage mode	700V	0.5A	100kHz	●Over current protection circuit ●Thermal protection circuit ●Over-boosted voltage protection in secondary section ●Intermittent operation timer	TO-220 Type/ TO-220(C) Type	D52/ D54
	MIP161		5W			0.43A			U Type	D36
	MIP162/172		10W			0.87A			TO-220 Type / TO-220(C) Type	D52 / D54
	MIP163/173		15W			1.35A				
	MIP164/174		20W			1.62A				
	MIP165/175		30W			2.25A				
	MIP166/176		40W			2.8A				
	MIP153	100/110V_{AC}	15W		350V	2.6A			TO-220 Type	D52

■ IPDs (Intelligent Power Device) (continued)

Application	Type No.	Input Voltage	Output Breakdown Voltage V_{DS}	Output MOS FET	Features	Package	
							No.
Non-insulation type power supply	△MIP403	70 to 115V_{AC}	400V	25mA (at 5V)	●Over current protection built-in ●Over input-voltage protection built-in Over output-voltage protection built-in ●Direct drive with the power supply rectifying the AC current	DIL-8	D72

△Tentative

Application	Type No.	Drive Voltage V_{CC}	Output MOS FET		Oscillation freq.	Package	
			V_{DSS}	I_D			No.
EL Driver	MIP803	1.5 to 3.5V	200V	15/70mA	140kHz	SSONF-10D Type	D85
	MIP804	0.9 to 3.3V	200V	10/60mA	140kHz	SSONF-10D Type	D85

Application	Type No.	Input Voltage V_{IN}	Output Breakdown Voltage V_{DSS}/V_{DS}*	Output current I_{OA}	Features	Package	
							No.
Lamp Driver	MIP501	5V	40V	1.7A	●Use with power supply of 24V AC ●Over current protection built-in ●Over voltage protection built-in	MT3 Type	D40
	MIP506		42V				
	MIP502	5V	40V	1.7A		TO-92NL Type	D48
	MIP503	−0.5 to 6.0V	* 60V	1A	●Use with power supply of 24V AC/12V DC ●Over voltage, over current, over heat, and load-shorting protection circuits built-in	TO-92NL Type	D48
	MIP504			2.0A			
	MIP704	−0.5 to 6.0V	* 60V	I_O = −1 to 2A	● Use with power supply of 24V AC/12V DC ● Over voltage, over current, over heat, load-shorting, and ESD protection circuits built-in ●For car electronics-accessories	TO-92NL Type	D48
	MIP705	−0.5 to 6.0V	* 60V	I_O = −1 to 2A	●Same function as MIP704	U Type	D36

■ GaAs MES(Metal Semiconductor) FET

● For V/UHF

Application	Type No.	Absolute Maximum Ratings (Ta =25 ℃)				Electrical Characteristics (Ta =25 ℃)						Package	
		V_{DS} (V)	V_{G1S} * V_{GS} (V)	V_{G2S} (V)	P_D (mW)	PG typ (dB)	NF typ (dB)	PG, NF Conditions					
								V_{DS} (V)	V_{G2} (V)	I_D (mA)	f (GHz)		No.
UHF RF	3SK241	13	−6	−6	200	19	1.5	5	1.5	10	0.8	Mini Type (4 pins)	D13
	3SK272	13	−6	−6	150	16	1.8	5	1.5	10	0.8	S-Mini Type (4 pins)	D6
	3SK273	13	−6	−6	200	16	1.8	5	1.5	10	0.8	S-Mini Type (4 pins)	D6
	3SK287	13	−6	−6	200	13	2.1	5	1.5	10	0.8	Mini Type (4 pins)	D13
	3SK282	10	−6	−6	200	17	1.6	5	1.5	10	0.8	Mini Type (4 pins)	D13
Power Amp.	2SK690	10	* −6	−	1W	15	P_O =25dBm	6	−	100	1	Mini-Power Type	D19

GaAs MMIC (Microwave Monolithic IC)

● For Amplifiers

Application	Type No.	NF (dB)	PG (dB)	Measuring Condition			Circuit Configuration	Package	
				V_{DD} (V)	I_{DD} (mA)	f(MHz)			No.
U/V CATV Wide Band Amp. Buffer Amp.	GN1010	2.0	9	3	25	100 to 2000	FET one-stage amp. (with band control pin)	Mini Type (4 pins)	D13
	GN1042	2.2	10	3	40	50 to 800	FET one-stage amp. Low distortion characteristics (IM2)	Mini Type (4 pins)	D13
	GN1044	1.8	19	V_{ds} 3	—	50	FET one-stage amp.	Mini Type (4 pins)	D13

● Laser Driver

Application	Type No.	jV_{DD} (V)	I_{DD} (mA)	I_{out} (mA)	P_D (mW)	t_r (ns)	t_f (ns)	Package	
									No.
Laser Drive	GN8061	6	50	200	500	typ 5	typ 5	DIL-8	D72
	GN8062	6	50	145	700	max 7	max 5	DIL-8	D72

● GaAs MMIC for Mobile Communication Use

Block	Type No.	Functions	Main Characteristics	Applications	Package	No.
Low Noise Amp	△GN01019B ☆	Low noise amplifier with AGC, small current operation f = 0.9GHz	PG: 18dB, I_D = 7mA NF: 2.3dB △CG: 30dB	GSM Analog PDC	Mini Type 6-Pin	D16
	GN01032N	Low noise amplifier + mixer with local amplifier, high conversion gain, small current operation f = 1.9GHz	Tentative specification CG:20dB NF: 4.5dB I_{DD} = 5mA	PHS general purpose	SSONF-10D	D85
	△GN01034N	Low noise amplifier + mixer with local amplifier, high conversion gain, small current operation f = 0.9GHz	Tentative specification CG: 18dB NF: 4.5dB I_{DD} = 5mA	Analog general purpose	SSONF-10D	D85
	△GN01046B	Low noise amplifier + mixer with local amplifier, high conversion gain, small current operation f = 1.9GHz	PG: 20dB, I_{DD} : 5mA NF: 2.7dB, I_{P3} : 4dBm	PHS	Mini Type 6-Pin	D16
	△GN01048B	Dual LNA	PG: 15dB, I_D = 2mA NF: 1.9dB	GSM Analog	Mini Type 6-Pin	D16
Pre-amp.	GN1010	Negative feedback wide-band amplifier (with external connection terminal for frequency band ajusting capacitor)	PG: 10dB, NF: 2dB I_{DD} = 5 to 45mA	General purpose	Mini Type 4-Pin	D13
	GN01037B ☆	Low noise amplifier with AGC function, single positive power supply f = 0.9GHz	PG1: 26dB, I_D : 30mA PG2: −14dB, P_{in} = −15dBm DM: −60dBc	GSM PDC PHS CDMA	Mini Type 6-Pin	D16
	GN01038B ☆	Low noise amplifier with AGC function, single positive power supply, low distortion characteristic	PG1: 12dB, I_D : 12mA PG2: −25dB, P_{in} = −15dBm DM: −65dBc	GSM PDC PHS CDMA	Mini Type 6-Pin	D16
	GN01039B	Low noise amplifier with AGC function, single positive power supply f = 1.5GHz	PG1: 19.5dB, I_O = 30mA PG2: −12.5dB, P_{in} = −20dB DM: −70dBc	PDC PHS	Mini Type 6-Pin	D16
	△GN01047B	Low noise amplifier with AGC function, single positive power supply f = 0.9GHz	P_O : 10dBm, △PG = 35dBc △AGC: −40dB, P_{in} = −15dBm DM: −57dBc, f = 950MHz	PHS PDC GSM CDMA	Mini Type 6-Pin	D16
Mixer	GN2011	Double balanced FET, mixer (with external connection balancer), high conversion gain, low noise	IP3: 23dBm, NF: 5.5dB I_{idle} : 3mA	Analog PDC general purpose	Mini Type 6-Pin	D16
	GN2012 ☆	Mixer with single positive power supply, high conversion gain, low distortion (IP3), low noise	IP3: 12dBm, I_D : 5mA CG: 12dB, NF = 4dB	Analog PDC general purpose	SMini Type 5-Pin	D8
	GN02018B ☆	Mixer with local amplifier, high conversion gain, low noise, low distortion (IP3), single positive power supply	IP3: 12dBm, I_D : 7mA CG: 13dB	Analog PDC	Mini Type 6-Pin	D16
	△GN02019B	Mixer with local amplifier, high conversion gain, low noise, low distortion (IP3), single positive power supply	IP3: 10dBm, I_D : 5mA CG: 13dB	Analog PDC	Mini Type 6-Pin	D16
Distributor Amp.	GN1051	Input matching circuit, small current consumption, high reverse-isolation characteristics	P_{out} = −3dBm S_{12} /S_{13} : 35dB I_{DD} = 3.6mA	Analog GSM PDC	Mini Type 6-Pin	D16
Switch	GN4002	SPDT switch, −3 to −8 V of switching voltage, small package version of GN04005	Loss: 0.6dB ISO: 30dB (V_{con} = 0/−5V, P_{in} = 0dBm, f = 1GHz)	PHS PDC	Mini Type 6-Pin	D16
	GN4004 ☆	SPDT switch, +3 to +8V of switching voltage, high output, single positive power supply operation	Loss: 0.6dB ISO: 27dB (V_{con} = 0/3V, P_{in} = 32dBm, f = 1GHz)	PDC GSM CDMA	SSONF-10D	D85
	GN04005	SPDT switch, −3 to −8V of switching voltage, low insertion-loss, high isolation	Loss: 0.6dB ISO: 25dB (V_{con} = 0/−5V, P_{in} = 22dBm, f = 1GHz)	PHS PDC	SSONF-10D	D85

△Tentative ☆ Ferro electric capacitor integrated

■ GaAs PA Module for Mobile Telephone

● Line-up on Destination and Specification

Category			System	Analog			Digital			
Products	Package		Destination	JAPAN	U.S.A.	U.K.	JAPAN			
				NTT/IDO	AMPS	E-TACS	PDC1	PDC2	PHS Portable set	PHS Base Station
		No.	Frequency (MHz)	915 to 942	824 to 849	872 to 905	925 to 958	1429 to 1953	1.9GHz	
PA Module	0.4 cc	D87/ D89	V_{DD} = 4.6V	—	UN00403	UN00404	—	—	—	—
	0.4 cc	D87/ D89	V_{DD} = 3.5V	UN00301	UN00303	UN00304	UN0036F	△UN0036H	—	—
	0.3 cc	D90		—	—	—	△UN0037F △UN0038F △UN0039F	—	—	—
	0.2 cc	D91		—	—	—	△UN0134F	△UN0134H	—	—
Power MMIC	SO-10D	D88	4.6V	—	—	—	—	—	—	GN05009N
	SSOF-10D	D84	3.5V	—	—	—	—	—	GN05008N	—

△Tentative

● Type No. Characteristics

Type No.		Destination	f (GHz)	P_O (dBm)	Pin (dBm)	V_{DD} (V)	VG (V)	I_{DD} (mA)	Package	
										No.
Analog	UN00403	AMPS	0.8	≧30.7	7	4.6	−3.5	<460	PAM04-2 0.4cc	D89
	UN00404	E-TACS	0.9	≧30.7	7	4.6	−3.5	<460	PAM04-2 0.4cc	D89
	UN00301	NTT/IDO	0.9	≧29.7	7	3.5	−3.2	<500	PAM04-2 0.4cc	D89
	UN00303	AMPS	0.8	≧30.3	7	3.5	−3.5	<620	PAM04-2 0.4cc	D89
	UN00304	E-TACS	0.9	≧30.3	7	3.5	−3.5	<620	PAM04-2 0.4cc	D89
Digital	UN0036F	PDC	940 to MHz	30.5	—	3.5	−2.5	typ 680	PAM04-2 0.4cc	D89
	△UN0036H	PDC	1.5	30.5	—	3.5	−2.5	typ 700	PAM04-2 0.4cc	D89
	△UN0037F	PDC	0.8	30.5	—	3.5	−2.5	typ 800	PAM04-3	D90
	△UN0038F	PDC	925 to 956MHz	30.5	—	3.5	−2.5	typ 665	PAM04-3	D90
	△UN0039F	PDC	940 to 958MHz	30.5	—	3.5	−2.5	typ 665	PAM04-3	D90
	△UN0134F	PDC	925 to 958MHz	30.2	—	3.5	−2.5	<700	PAM02-1	D91
	△UN0134H	PDC	1.5	30.5	—	3.5	−2.5	<770	PAM02-1	D91
	GN05008N	PHS/CT2	1.9	21.5	—	3.5	−2.8	150	SSOF-10D	D84
	GN05009N	PHS base station	1.9	25.5	—	4.8	−3.0	<420	SO-10D	D88

△Tentative

■ Switching Diodes Line-up

Surface Mount Type											Hole-through type			Glass						
SS-Mini Type (2 Pin) (D78)	SS-Mini Type (3 Pin) (D2)	S-Mini Type (2 Pin) (D3)	S-Mini Type (3 Pin) (D5)	S-Mini Type (4 Pin) (D7)	S-Mini Type (6 Pin) (D10)	Mini Type (3 Pin) (D12)	Mini Type (4 Pin) (D14)	Mini Type (6 Pin) (D16)	T-Mini Type (3 Pin) (D21)	Flat-Mini Type (3 Pin) (D80)	M Type (D35)	NS Type (D34)	MT1 Type (D37)	Leadless (D30)	DO-34 (D26)	DO-35 (D28)	V_R (V)	I_F (mA)	I_R max (nA)	t_{rr} max (ns)
			MA10100			* MA199											200	100	200	60
						* MA158	MA174										200	100	100	—
															* MA188		200	200	200	60
		* MA115						MA129							* MA185	* MA182	200	200	200	—
		* MA114															150	200	200	—
							MA193	MA126									80	100	100	10/3
	MA132WA		MA142WA			MA152WA		MA122	MA1U152WA	MA10152D		MA176WA	MA205WA				80	100	100	10
	MA132WK		MA142WK			MA152WK MA152HA		MA123/124	MA1U152WK	MA10152E		MA176WK	MA205WK				80	100	100	3
MA2S111	* MA132A/K MA132HK	* MA111	* MA142A/K * MA147	MA4S159	MA6S121	* MA152A/K * MA157A	MA159A MA160A	MA121	MA1U152A/K MA1U157A	* MA10152A/K * MA10152F			MA207				80	100	100	3
	MA133		MA143A			MA153A											80	100	100	—
						* MA200A/K MA3X200F											80	100	10	100
						MA200WA											80	150	10	100
						MA200WK											80	150	10	100
		* MA113													* MA179	* MA171	80	200	50	20
														* MA223	* MA167	* MA162	75	100	25	4
														* MA222	* MA166	* MA161	50	100	25	4
															* MA196		50	100	25	200
								MA127			MA154WA	MA175WA	MA204WA				40	100	100	10
								MA128			MA154WK	MA175WK	MA204WK				40	100	100	3
							MA160										40	100	100	3
			MA143			MA153		MA125			MA156	MA177	MA206				40	100	100	—
														* MA221	* MA165	* MA150	35	100	25	10
		* MA112													* MA178	* MA170	40	200	50	20
		* MA116				MA198	MA194								* MA195	* MA190	35	100	25	200

* Contains Single Element

■ Variable Capacitance Diodes

	SS-Mini Type 2 Pins (D79)	S-Mini Type 2 Pins (D4)	S-Mini type 2 Pins Flat (D3)	Mini Type 2 Pins (D11)	Mini Type 3 Pins (D12)	Mini Type 4 Pins (D14)	Mini Type 6 Pins (D16)	DO-34 (D26)	DO-35 (D28)	V_R (V)	CD1 (pF)	V_R (V)	CD2 (pF)	V_R (V)	r_D (Ω)
UHF/VHF Tuning		MA360		MA321						30	14.360 to 16.340	2	2.089 to 2.448	25	<0.6
				MA334			MA344			30	11.233 to 12.781	3	2.020 to 2.367	25	<0.72
	MA2S372	MA372	MA372J	MA339						32	14.220 to 15.473	2	2.132 to 2.321	25	<0.45
CATV Tuning				MA329						32	25.87 to 32.64	3	2.58 to 3.20	25	<1.6
				MA335						32	29.40 to 36.93	2	2.58 to 3.19	25	<0.98
		MA366		MA338						34	27.13 to 32.15	2	2.60 to 3.15	25	<0.63
		MA365								32	36.00 to 42.59	2	2.54 to 3.08	25	<0.85
		MA371								32	34.00 to 38.67	2	2.596 to 3.195	25	<0.75
		MA374								34	44.000 to 50.790	2	2.60 to 3.03	25	<0.9
	MA2S357	MA357								34	29.00 to 34.30	2	2.53 to 2.92	25	<0.54
SHF Tuning		MA368			MA370					30	3.6 to 5.6	1	0.5 to 0.9	30	2.0
UHF/VHF AFC	MA2S367	MA367		MA341						30	10.5 to 16.0	2	3.3 to 5.7	10	<1.6
								MA840		32	10.5 to 16.0	2	3.3 to 5.7	10	<1.2
FM.AM AFC									MA345	15	10.0 to 16.0	10	—	—	—
								MA346		15	10.0 to 16.0	10	—	—	—
						MA348				15	10.0 to 16.0	10	—	—	—
VCO	MA2S331	MA331								12	14.0 to 16.0	2	5.5 to 6.5	10	<0.22
		MA377								12	2.80 to 3.40	2	1.1 to 1.5	10	<0.60
	MA2S376	MA376								6	14.00 to 16.00	1	6.8 to 8.9	3	<0.30
	MA2S304	MA304								15	24.8 to 29.8	1	6.0 to 8.3	4	<1.0
		MA10301								15	19.5 to 23.5	1	14.3 to 17.6	2	<0.35
	MA2SV01	MA2ZV01								6	15.0 to 17.0	1	5.0 to 7.0	3	<1.0
		MA2ZV02								6	18.0 to 20.0	1	6.9 to 9.4	4	<0.3
		MA2ZV03								6	5.0 to 6.0	1	1.93 to 2.85	4	<0.3
		MA362		MA333						9	13.5 to 17.0	2	2.8 to 4.5	6	<0.35
GaAs		MA391								10	typ 3.7 to 5.0	1	1.0 to typ 1.4	4	<0.5
		MA392								10	3.5 to 6.5	1	1.0 to 2.6	4	<0.4
		MA393								10	8.0 to 13.0	1	2.1 to 5.1	4	<0.4

■ Silicon Diodes (AVC)

Type No.	V_R (V)	I_{FM} (mA)	V_F (V)	$\Delta V_F / \Delta T$ typ (mV/C)	Package	No.
MA27/29	6	150	0.56 to 0.64	2	DO-35/34	D28/26
MA27W/29W	6	100	1.18 to 1.36	4.6	DO-35/34	D28/26
MA27T/29T	6	70	1.76 to 2.04	6.5	DO-35/34	D28/26
MA27Q/29Q	6	50	2.20 to 2.54	8.8	DO-35/34	D28/26
MA28	6	150	0.56 to 0.64	2	Mini (3 pins)	D12
MA28W	6	100	1.18 to 1.36	4.6	Mini (3 pins)	D12
MA28T	6	70	1.76 to 1.92	6.5	Mini (3 pins)	D12
MA30	6	150	0.56 to 0.64	2	S-Mini (3 pins)	D3
MA30W	6	100	1.18 to 1.36	4.6	S-Mini (3 pins)	D3

■ Silicon Rectifiers

	Type No.	V_{RM} (V)	$I_{F(AV)}$ (mA)	I_{FRM} (mA)	I_{FSM} (A)	I_R max (μA)	V_F max (V)	Package	No.
Small Signal Type	MA158	200	100	225	0.5	0.2	1.3	Mini Type (3 pins)	D12
	MA291	200	200	300	6	1	1.3	Mini Power (2 pins)	D17
Power Type	△ MA2QA01	400	1000	—	25	10	1.1	New Mini-Power Type (2 pins)	D18
	△ MA2QA02	600	1000	—	25	10	1.1	New Mini-Power Type (2 pins)	D18

△Tentative

■ Silicon Diodes (Band Switch)

Type No.	V_R (V)	I_F max (mA)	C_D typ (pF)	rf typ (Ω)	V_R (V)	Package	No.
MA57	30	100	1.3	0.55	15/6	Mini Type (3 pins)	D12/11
MA70	35	100	0.9	0.65	—	S-Mini Type (3 pins)	D5
MA73	35	100	0.9	0.4	6	Mini Type (2 pins)	D11
MA75WA/WK	35	100	0.9	0.4	6	Mini Type (3 pins)	D12
MA77	35	100	0.9	0.65	6	S-Mini Type (2 pins)	D4
MA2S077	35	100	0.9	0.65	6	SS-Mini Type (2 pins)	D79
MA78	35	100	0.9	0.4	0.6	Mini Type (6 pins)	D16
MA80WA/WK	35	100	0.9	0.4	6	S-Mini Type (3 pins)	D5
MA81	30	100	1	0.55	6	S-Mini Type (2 pins)	D4
MA856/858	30	100	1.3/1	0.55	15/6	DO-34	D26
MA859/860	35	100	0.8	0.4	6	DO-34/Leadless	D26/30
MA862	35	100	1	0.4	6	Mini Type (4 pins)	D14

■ Zener Diodes

● MA4000 Series (Bidirectional)

Zener Voltage V_Z (V)	Type No.	I_Z (mA)	Package	No.
8.2 to 10.0	MA4091X	20	DO-34	D26

● MA6Z Series

Zener Voltage V_Z (V)	Type No.	$I_{F(AV)}$ (mA)	Package	No.
9.4 to 10.6	MA6Z100WA MA6Z100WK	※100	Flat-S-Mini Type (3 pins)	D5

※ Value used in the single mode

■ Zener Diodes

● MA3000W Series (Contains Multi Elements)

Zener Voltage V_Z (V)	Type No. P_D =200mW P_{ZSM} =15W	Connection	Package	No.
4.4 to 5.0	MA3047W	④	Mini Type (4 pins)	D14
5.3 to 6.0	MA3056W	④	Mini Type (4 pins)	D14
5.8 to 6.6	MA3062W	④	Mini Type (4 pins)	D14
5.8 to 6.6	MA3062WA	①	Mini Type (3 pins)	D12
7.0 to 7.9	MA3075WA	①	Mini Type (3 pins)	D12
7.0 to 7.9	MA3075WK	②	Mini Type (3 pins)	D12
7.0 to 7.9	MA3075T	⑤	Mini Type (4 pins)	D14
7.7 to 8.7	MA3082WA	①	Mini Type (3 pins)	D12
8.5 to 9.6	MA3091WK	②	Mini Type (3 pins)	D12
9.4 to 10.6	MA3100W	④	Mini Type (4 pins)	D14
9.4 to 10.6	MA3100WA	①	Mini Type (3 pins)	D12
9.4 to 10.6	MA3100WK	②	Mini Type (3 pins)	D12
11.4 to 12.7	MA3120WA	①	Mini Type (3 pins)	D12
12.4 to 14.1	MA3130WA	①	Mini Type (3 pins)	D12
18.8 to 21.2	MA3200W	④	Mini Type (4 pins)	D14
18.8 to 21.2	MA3200WA	①	Mini Type (3 pins)	D12
34.0 to 38.0	MA3360S	③	Mini Type (3 pins)	D12
9.4 to 10.6	MA3A100	⑥	Mini Type (6 pins)	D16
25.1 to 28.9	MA03270R	⑥	Mini Type (6 pins)	D16

[Internal Connection]

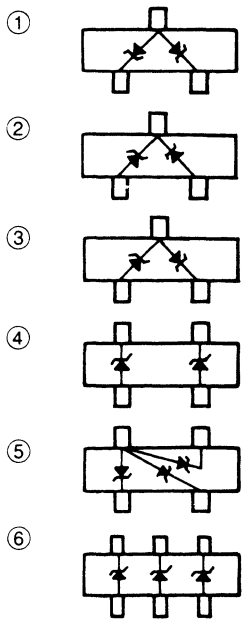

● Zener Diode Series

Zener Voltage V_Z (V)	MA1000 DO-35 (D28) P_D = 500mW	MA2000 DO-41 (D29) P_D = 1W	MA3000/MAZ Mini Type 3 pins (D12) P_D = 200mW	MA4000 DO-34 (D26) P_D = 370mW	MA5000 Mini-Power Type 2 pins (D17) P_D = 500mW	MA7000 DO-41 (D29) P_D = 800mW	MA8000 S-Mini Type 2 pins (D3) P_D = 150mW	MA1Z000 New Mini-Power Type 2 pins (D18) P_D = 1W
1.88 to 2.24	MA1020			MA4020				
2.08 to 2.45	MA1022			MA4022				
2.28 to 2.70	MA1024		MA3024	MA4024			MA8024	
2.50 to 2.90	MA1027		MA3027	MA4027			MA8027	
2.80 to 3.20	MA1030		MA3030	MA4030			MA8030	
3.10 to 3.50	MA1033		MA3033	MA4033			MA8033	
3.40 to 3.80	MA1036		MA3036	MA4036			MA8036	
3.70 to 4.10	MA1039		MA3039	MA4039			MA8039	
4.00 to 4.60	MA1043		MA3043	MA4043			MA8043	
4.40 to 5.00	MA1047		MA3047	MA4047	MA5047		MA8047	MA1Z047
4.80 to 5.40	MA1051	MA2051	MA3051	MA4051	MA5051	MA7051	MA8051	MA1Z051
5.30 to 6.00	MA1056	MA2056	MA3056	MA4056	MA5056	MA7056	MA8056	MA1Z056
5.80 to 6.60	MA1062	MA2062	MA3062 MAZ9062D MAZC062D	MA4062	MA5062	MA7062	MA8062	MA1Z062
6.40 to 7.20	MA1068	MA2068	MA3068	MA4068	MA5068	MA7068	MA8068	MA1Z068
7.00 to 7.90	MA1075	MA2075	MA3075	MA4075	MA5075	MA7075	MA8075	MA1Z075
7.70 to 8.70	MA1082	MA2082	MA3082	MA4082	MA5082	MA7082	MA8082	MA1Z082
8.50 to 9.60	MA1091	MA2091	MA3091	MA4091	MA5091	MA7091	MA8091	MA1Z091
9.40 to 10.60	MA1100	MA2100	MA3100	MA4100	MA5100	MA7100	MA8100	MA1Z100
10.40 to 11.60	MA1110	MA2110	MA3110	MA4110	MA5110	MA7110	MA8110	MA1Z110
11.40 to 12.70	MA1120	MA2120	MA3120	MA4120	MA5120	MA7120	MA8120	MA1Z120
12.40 to 14.10	MA1130	MA2130	MA3130	MA4130	MA5130	MA7130	MA8130	MA1Z130
13.65 to 14.35	MA1140		MA3140	MA4140			MA8140	
13.90 to 15.60	MA1150	MA2150	MA3150	MA4150	MA5150	MA7150	MA8150	MA1Z150
15.30 to 17.10	MA1160	MA2160	MA3160	MA4160	MA5160	MA7160	MA8160	MA1Z160
16.90 to 19.10	MA1180	MA2180	MA3180	MA4180	MA5180	MA7180	MA8180	MA1Z180
18.80 to 21.20	MA1200	MA2200	MA3200	MA4200	MA5200	MA7200	MA8200	MA1Z200
20.80 to 23.30	MA1220	MA2220	MA3220	MA4220	MA5220	MA7220	MA8220	MA1Z220
22.50 to 25.60	MA1240	MA2240	MA3240	MA4240	MA5240	MA7240	MA8240	MA1Z240
25.10 to 28.90	MA1270	MA2270	MA3270	MA4270		MA7270	MA8270	MA1Z270
28.00 to 32.00	MA1300	MA2300	MA3300	MA4300		MA7300	MA8300	MA1Z300
31.00 to 35.00	MA1330	MA2330	MA3330	MA4330		MA7330	MA8330	MA1Z330
34.00 to 38.00	MA1360	MA2360	MA3360	MA4360		MA7360	MA8360	MA1Z360
37.00 to 41.00	MA1390	MA2390		MA4390		MA7390		MA1Z390
40.00 to 46.00		MA2430				MA7430		MA1Z430
44.00 to 50.00		MA2470				MA7470		MA1Z470
48.00 to 54.00		MA2510				MA7510		MA1Z510
52.00 to 60.00		MA2560				MA7560		
180.00 to 220.00								
200.00 to 240.00								
215.00 to 265.00								
245.00 to 300.00								
270.00 to 330.00								
300.00 to 360.00								

MA2Z000 ☆ New Mini Type 2 pins (D18) P_D = 1W	MA4Z000 ☆ SS-Mini Type 3 pins (D2) P_D = 150mW	MA5Z000 ☆ S-Mini Type 2 pins (D3) P_D = 150mW	MA7Z000 SS-Mini Type 2 pins (D78)* P_D = 150mW	MAZS000 SS-Mini Type 2 pins (D78) P_D = 150mW	MAZH000 ☆ Half New Mini-Power Type 2 pins (D86) P_D = 500mW	MAZV000 ☆ S-Mini Type 3 pins (D5) P_D = 150mW	MAZK/L Mini Type 5 pins (D15) P_D = 150/200mW
			MA7Z024	MAZS024			
			MA7Z027	MAZS027			
			MA7Z030	MAZS030			
			MA7Z033	MAZS033			
			MA7Z036	MAZS036			
			MA7Z039	MAZS039			
			MA7Z043	MAZS043			
			MA7Z047	MAZS047			
			MA7Z051	MAZS051			
			MA7Z056	MAZS056			
			MA7Z062	MAZS062	MAZH062		MAZL062D
			MA7Z068	MAZS068			MAZK/L068D
			MA7Z075	MAZS075			
	MA4Z082WA		MA7Z082	MAZS082		MAZV082D	
			MA7Z091	MAZS091			
			MA7Z100	MAZS100			
			MA7Z110	MAZS110			
			MA7Z120	MAZS120	MAZH120		MAZL120D
			MA7Z130	MAZS130			
			MA7Z140	MAZS140			
			MA7Z150	MAZS150			
			MA7Z160	MAZS160			
			MA7Z180	MAZS180			
			MA7Z200	MAZS200			
			MA7Z220	MAZS220			
			MA7Z240	MAZS240			
			MA7Z270	MAZS270			MAZK270D
			MA7Z300	MAZS300			
			MA7Z330	MAZS330			
			MA7Z360	MAZS360			
			MA7Z390	MAZS390			
MA2Z200		MA5Z200					
MA2Z220		MA5Z220					
MA2Z240		MA5Z240					
MA2Z270		MA5Z270					
MA2Z300		MA5Z300					
MA2Z330		MA5Z330					

* MA7Z series package is a long pin type ☆ Types under development

■ Schottky Barrier Diodes (SBD) (For Small Current)

Package															I_F (mA)	V_{RM} (V)	V_F max (V)	I_R (μA)
SS-Mini Type 2 Pins (D78)	SS-Mini Type 3 Pins (D2)	S-Mini Type 2 Pins (D3)	S-Mini Type 3 Pins (D5)	S-Mini Type 4 Pins (D7)	S-Mini Type 6 Pins (D10)	Mini Type 2 Pins (D11)	Mini Type 3 Pins (D12)	Mini Type 4 Pins (D14)	Mini Type 6 Pins (D16)	Mini-Power Type 2 Pins (D17)	New Mini-Power 2 Pins (D18)	Half New Mini-Power Type 2 Pins (D86)	Leadless (D30)	DO-34 (D26)				
														MA700	30	15	0.4	0.1
							MA704									15	0.4	0.2
	MA795 MA795WA/WK*	MA732	MA745 MA745WA/WK*				MA717, MA715* MA717WA/WK									30	0.3	30
MA2S728	MA781	MA728					MA704A									30	0.4	0.3
	MA781WA/WK*		MA741													30	0.4	0.2
			MA741WA/WK* MA742*	MA4S713*	MA6S718*		MA716* MA704WA/WK*	MA713* MA714*	MA718*							30	0.4	1
														MA700A		30	0.4	0.15
														MA776		40	0.4	0.2
MA2S784		MA784	MA792* MA792WA/WK* MA793*				MA786 MA786WA/WK* MA791*							MA774	100	30	0.55	15
														MA775		50	0.55	15
		MA785					MA787	MA796					MA780			50	0.55	30
		MA10704													200	20	0.55	2
														MA723		30	0.55	15
		MA729	MA744				MA721 MA721WA/WK* MA740*	MA724* MA726*								30	0.55	50
							MA727	MA746*								50	0.55	200
													MA782	MA777		40	0.55	15
							MA788									60	0.65	50
			MA10700				MA720							MA719	500	40	0.55	100
							MA789									60	0.65	100
							MA748									20	0.5	30
		MA2ZD02	MA10702				MA10703									20	0.55	10
											MA739				700	90	0.8	1000
							MA10701									30	0.55	80
											MA735	△MA2H735			1000	30	0.5	1000
										MA701A						40	0.55	1000
											MA736	△MA2H736				40	0.55	2000
										MA701						20	0.55	1000
											MA737				1500	30	0.5	1000
											MA738					40	0.55	2000
											MA10705					30	0.37	3000
											MA2QD01					60	0.55	1000
								MA743*							30/200	30/30	0.4/0.55	300/50
						MA707*	MA730*								—	5	0.25	35
							MA790*								15	10	0.47	0.2

△Tentative ✻ Contains Single Element

■ Schottky Barrier Diodes (SBD) (For Power)

Category	Type No.	Main Characteristics (Ta =25 ℃)					Package	No.
		V_R (V)	$I_{F(AV)}$ (A)	V_F max (V)	t_{rr} * typ (ns)	I_R (mA)		
Cathode common type	MA749/A	40/45	5	0.55	11	1	TO-220(F)	D55
	MA7D49/A	40/45	5	0.55	—	1	TO-220D	D58
	MA3U750	40	10	0.55	—	3	U Type	D36
	MA750/A	40/45	10	0.55	15	3	TO-220(F)	D55
	MA7D50/A	40/45	10	0.55	—	3	TO-220D	D58
	MA752/A	40/45	20	0.55	30	5	TO-220(F)	D55
	MA7D52/A	40/45	20	0.55	—	5	TO-220D	D58
	MA751/A	40/45	20	0.55	30	5	TOP-3F(a)	D63
	MA753/A	40/45	5	0.55	—	1	N Type	D42
	MA3U755	60	5	0.55	—	1	U Type	D36
	MA755	60	5	0.55	11	1	TO-220(F)	D55
	MA7D55	60	5	0.58	—	1	TO-220D	D58
	MA756	60	10	0.55	15	3	TO-220(F)	D55
	MA7D56	60	10	0.58	—	3	TO-220D	D58
	MA3U760	90	5	0.85	—	1	U Type	D36
	MA760	90	5	0.85	11	1	TO-220(F)	D55
	MA7D60	90	5	0.80	—	1	TO-220D	D58
	MA761	90	10	0.85	15	3	TO-220(F)	D55
	MA7D61	90	10	0.85	—	3	TO-220D	D58
	MA762	90	20	0.85	30	5	TOP-3F(a)	D63
	MA768	150	5	0.85	—	1	TO-220(F)	D55
	MA7D68	150	5	0.85	—	1	TO-220D	D58
	MA769	150	10	0.85	—	3	TO-220(F)	D55
	MA7D69	150	10	0.55	—	3	TO-220D	D58
	MA7U49	40	5	0.55	—	1	U Type	D36
Single chip type	MA2D749/A	40/50	5	0.55	—	—	TO-220D[1)]	D62
	MA2D750/A	40/50	10	0.55	—	—	TO-220D[1)]	D62
	MA2D755	60	5	0.58	—	—	TO-220D[1)]	D62
	MA2D760	90	5	0.85	—	—	TO-220D[1)]	D62

1) 2-pin Type

■ Fast Recovery Diodes (FRD)

Category	Type No.	Main Characteristics (Ta =25 ℃)				Package	No.
		V_{RRM} (V)	$I_{F(AM)}$ (A)	V_F max (V)	t_{rr} max (ns)		
Cathode common type	MA629	200	3	1.0	45	MT-4	D41
	MA3U649	200	5	1.0	100	U Type	D36
	MA3U650	200	10	1.0	100	U Type	D36
	MA649	200	15	1.0	100	TO-220(F)	D55
	MA6D49	200	5	0.98	30	TO-220D	D58
	MA650	200	10	1.0	100	TO-220(F)	D55
	MA6D50	200	10	0.98	30	TO-220D	D58
	MA652	200	20	1.0	100	TO-220(F)	D55
	MA6D52	200	20	0.98	50	TO-220D	D58
	MA653	300	5	1.0	100	TO-220(F)	D55
	MA6D53	300	5	0.98	50	TO-220D	D58
	MA654	300	10	1.0	100	TO-220(F)	D55
	MA6D54	300	10	0.98	50	TO-220D	D58
	MA655	300	20	1.0	100	TOP-3F(a)	D63
	MA693	400	5	1.0	100	TO-220(F)	D55
	MA6D93	400	5	1.0	100	TO-220D	D58
	MA694	400	10	1.0	100	TO-220(F)	D55
	MA6D94	400	10	1.0	100	TO-220D	D58
	MA695	400	20	1.0	100	TOP-3F(a)	D63
	MA3U653	300	5	1.0	100	U Type	D36
	MA3U654	300	10	1.0	100	U Type	D36
Single chip type	MA689	200	2.5	1.0	100	TO-220(F)	D55
	MA6D89	200	2.5	0.98	40	TO-220D[1)]	D62
	MA690	200	5	1.0	100	TO-220(F)	D55
	MA6D90	200	5	0.98	45	TO-220D[1)]	D62
	MA6D91	200	10	1.0	100	TO-220D	D58

1) 2-pin Type

■ PIN Diodes

Type No.	V_R (V)	I_F (mA)	C_D max (pF)	I_F (μA)	r_{f1} typ (kΩ)	I_F (mA)	r_{f2} max (Ω)	Package	No.
MA551	40	100	0.5	10	2	10	10	Mini Type (3 pins)	D12
MA3Z551	40	100	0.5	10	2	10	10	S-Mini Type (3 pins)	D5
MA558	40	100	0.5	—	2	10	6	Mini Type (3 pins)	D12
MA553	40	100	0.4typ	10	2	10	10	M Type	D35
MA555	40	100	0.5	10	2	10	10	Mini Type (3 pins) 2 elements contained	D12
MA556	40	100	0.5	10	2	10	10	Mini Type (6 pins) 3 elements contained	D16
MA557	40	100	0.5	10	2	10	10	Mini Type (3 pins)	D12

■ Triggers

Package		P_{DAV} (mA)	I_P (A)	Topr (℃)	V_{BO}			I_{BO}		
DO-35 (D27)	Leadless (D30)				I (μA)	min (V)	max (V)	V (V)	typ (μA)	max (μA)
MA64	MA2R064	150	2[1)]	100	I_B 0	28	36	V_B 0	10	100

1) Ta =25 ℃, t <10 μs, f =60Hz

■ Composite Elements

Type No.	V_R (V)	I_F (mA)	V_F max (V)	I_F (mA)	C_D typ (pF)	V_R (V)	t_{rr} typ (ns)	I_F (mA)	Basic Type No.	Package	No.
MA999	30/40	30/100	1.0	30	1.5	1.0	1.0	10	MA704A MA151K	Mini Type (4 pins)	D14

Type No.	P_{tot} (mW)	P_{ZSM} (W)	I_R (μA)	V_R (V)	V_Z min (V)	V_Z max (V)	Basic Type No.	Package	No.
MA997	200	15	0.5	2.5	5.98	6.62	MA151K MA8056	Mini Type (3 pins)	D12
MA950	150	–	0.1 0.05 1	5 34 216	7.29 40.0 270.0	7.67 46.0 290	MA8075-M MA8430 MA5Z270	Mini Type (6 pins)	D16

■ GaAs Hall Elements

Sensitivity	Type No.	Control Voltage V_C max (V)	Operating Temperature Range T_{opr} (℃)	No-load Hall Voltage $V_{H(typ)}$ (mV)	V_C (V)	B (G)	Unbalanced Rate V_{HC}/V_H max (%)	Unbalanced Voltage V_{HC} max (mV)	Input Resistance RIN typ (kΩ)	I_C (mA)	Hall Voltage Temperature Coefficient β max typ (%/℃)	Package	No.
Low sensitivity	OH008	12	−30 to +125	105	6	1k	–	±19	0.75	1	−0.06	Mini Thin-Type (convex)	D25
	OH009											Mini Type (4 pins)	D13
	OH010											Mini Thin-Type (4 pins, convex)	D24
Medium sensitivity	OH003	12	−30 to +125	150	6	1k	±12	–	0.85	1	−0.06	Mini Type (4 pins)	D13
	OH004											Mini Thin-Type (4 pins, convex)	D24
High sensitivity	OH017	6	−10 to +125	90	3	1k	–	±9.5	2	0.1	−0.06	Mini Thin-Type (4 pins)	D23
	OH023								2		−0.06	Mini Type (4 pins)	D13

■ InSb Hall Elents

Sensitivity	Type No.	Control Voltage V_C max (V)	Operating Temperature Range T_{opr} (℃)	No-load Hall Voltage $V_{H(typ)}$ (mV)	V_C (V)	B (G)	Unbalanced Voltage V_{HC} max (mV)	Input Resistance R_{IN} typ (kΩ)	I_C (mA)	Hall Voltage Temperature Coefficient β max typ (%/℃)	Package	No.
High sensitivity	OH00033	2	−20 to +115	250	1	0.05	±7	0.36	0.1	−2	Mini Type (4 pins)	D13
	OH00035	2	−20 to +115	250	1	0.05	±7	0.34	0.1	−2	Mini Type (4 pins)	D13
	OH00036	2	−20 to +115	186	1	0.05	±7	0.34	0.1	−2	S-Mini Type (4 pins)	D6

Opto-Electronic Device Selection Guide

Contents

⚠ Caution for Safety

⚠ **DANGER**	Do not touch or look at a laser beam directly. It is in danger of a injury to eyesight or outer skin in the worst case.

■ Red Light Emitting Diodes (for Control)

Application	Type No.	Package	No.	I_F max (mA)	P_O min (mW)	V_F max (V)	λp typ (nm)	θ typ (deg.)
For control	LN124W	5 ϕ Plastic	P5F02-1	40	1	2.6	680	30
	LN145W	Side view	PSF02-1	40	2.5	2.2	700	80
	LNA4402F	TO-18	MF02-1	40	1.8	2.2	700	30

■ Semiconductor Laser Diodes

Applications	Type No.	Package No.	P_o max (mW)	I_{th} typ (mA)	I_{op} typ (mA)	λL typ (nm)	$\theta_{//}$ typ (deg.)	$\theta_{\perp}$ typ (deg.)	V_{op} typ (V)
VD・LBP	LNC702DS/MS/PS	L5	5	15	25	785	10	25	1.8
Optical disk for video processing	LNC703PS	L5	15	25	35	785	10	25	2.0
	LNC701PS	L5	35	30	70	785	10	25	2.0
	LNC704PS	L5	40	30	70	785	10	25	2.0
	LNC705PS	L5	50	20	70	795	10	25	2.0
	LNC802DS/MS/PS	L5	50	30	60	830	10	25	2.0
Optical communication	LN7301	L9	5	15	27	1.3	25	35	1.2
	LN7301S	L5	5	15	27	1.3	25	35	1.2
	LN7301F	L5	5	15	17	1.3	15	15	1.2

● Red Laser Diodes

Type No.	Package No.	P_o max (mW)	I_{th} typ (mA)	I_{op} typ (mA)	λL typ (nm)	$\theta_{//}$ typ (deg.)	$\theta_{\perp}$ typ (deg.)	V_{op} typ (V)
LN9R05MS	L5	5	45	52	680	9	32	2.5
LN9R05NS	L5	5	40	50	680	9	32	2.5
LN9P01S	L5	1.5	50	52	635	7	30	2.5
LN9P03S/MS	L5	3	50	54	635	7	30	2.5
LNCR01PS	L5	35	45	80	685	8.5	21	2.6

■ Laser Modules

● Laser Module for Optical Communication

Type No.	Package No.	P_f max (mW)	I_{th} typ (mA)	I_{op} typ (mA)	λL typ (μm)	Er typ (dB)	tr,tf typ (ns)	V_{op} typ (V)
LN7301M005	LM04	2	15	25	1.3	0.5	0.3	25

■ Infrared Light Emitting Diodes (for Remote Control)

Applications	Type No.	Package	No.	I_F (mA)	P_D (mW)	P_o *I_E min (mW)	V_F max (V)	λ_p typ (nm)	θ typ (deg.)
For remote control	LN66	5 ϕ Plastic	P5002-1	100	160	3	1.6	950	25
	LN66A	5 ϕ Plastic	P5002-1	100	160	*9mW / sr.	1.6	950	25
	LN66F	5 ϕ Plastic	P5002-1	50	75	*13mV / sr.	1.5	900	15
	LN66(NC)	5 ϕ (Dark blue)	P5002-1N	100	160	3	1.6	950	25
	LN66(L)	5 ϕ Long lead	P5002-2	100	160	5	1.6	950	25
	LN68	3 ϕ Plastic	P3002-1	50	75	2.5	1.5	940	20
	LN69	3 ϕ Long lead	P3002-2	50	75	—	1.5	940	15
	LN166	5 ϕ Plastic	P5002-1	100	160	*10mW / Sr.	1.6	950	20
	LNA2801L	3 ϕ Plastic	P3002-2	50	75	—	1.5	940	15
	LNA2901L	5 ϕ Long lead	P5002-4	50	160	12 typ	1.5	950	20

■ Infrared Light Emitting Diodes (for AF, Control and Space Transmission)

Applications	Type No.	Package	No.	I_F (mA)	P_D (mW)	P_o *I_E min (mW)	V_F max (V)	λ_p typ (nm)	θ typ (deg.)
For AF	LN155	Side view	PSF02-1	100	160	3	1.6	940	80
	LN184	TO-18	MFL2-1	100	190	3	1.9	880	20
	LN189L	Mini mold	PR002-1	100	190	3	1.9	880	20
	LN189M	Mini mold	PR002-2	85	160	3	1.9	880	20
	LN189S	Mini mold	PR002-2	80	190	3	2	880	15
	LN671	Flat package	PFES04-2	70	130	7	1.8	880	50
	LNA4201F	Flat package	PFES04-4	I_{FP} 300	—	3.0	2.0	700	83
	LNA4601L	Side view	PSLS2-1	I_{FP} 300	—	3.0	2.0	700	18
For control	LN51L	TO-18	ML02-1	100	150	3	1.5	950	8
	LN51F	TO-18	MF02-1	100	150	3	1.5	950	32
	LN52	TO-18 (Small)	MR02-1	100	160	3.5	1.6	950	100
	LN54	Side view	PSLS2-1	50	75	2.5	1.5	950	17
	LN55	Side view	PSLS2-2	50	75	1.8	1.5	950	35
	LN57	Double end	PD002-1	50	75	3	1.5	950	18
	LN58	Side view	PSLS2-3	50	75	1.8	1.5	950	35
	LN59	Bidirectional type	PSLD2-1	50	75	1.8	1.5	940	—
	LN59L	Bidirectional type Long lead	PSLD2-2	50	75	1.8	1.5	940	—
	LN159	Bidirectional type	PSLD2-3	50	75	1.8	1.5	940	—
	LN65	Side view	PSLS2-2	100	160	4.3	1.6	950	35
	LN75X	Side view	PSLS2-2	100	180	6	1.8	880	35
	LN78	Side view	PSLS2-3	100	180	6	1.8	880	40
	△LN151L	TO-18	ML02-1	100	160	4.5	1.6	950	8
	△LN151F	TO-18	MF02-1	100	160	4.5	1.6	950	32
	LN152	TO-18 (Small)	MR02-1	100	160	5	1.6	950	90
	LN62S	3 ϕ Ceramic	C302-1	50	75	1.5	1.5	950	80
	LN162S	3 ϕ Ceramic	C302-1	50	75	1.5	1.5	950	80
	LN172	TO-18 (Small)	MR02-2	2	170	7	1.7	900	100
	LN175	Side view	PSF02-1	100	170	7	1.7	900	120
	▲LNA2601L	Side view	PSLS2-7	50	75	1.5	1.5	940	20
	▲LNA2602L	Side view	PLSL2-6	50	75	1.5	1.5	940	35
	LNA4401L	TO-18	ML02-1	100	190	6	1.9	860	6
For space transmission	LNA4801L	3 ϕ Plastic	P3002-2	100	190	12mW /Sr	1.9	860	22
	▲ LNA4802L	3 ϕ Plastic	P3002-2	100	—	—	1.9	870	20
	▲ LNA4904L	5 ϕ Plastic	P5000-1	100	—	—	1.9	870	20
	LN77L	5 ϕ Long lead	P5002-4	100	190	10	1.9	860	20
	LNA4902L	5 ϕ Long lead	P5002-4	100	—	21	1.9	860	15

△Tentative ▲Under development

■ PIN Photodiodes (for AF, CD, VD, Optical Communications, Control and Space Transmission)

Applications	Type No.	Package Construction	No.	V_R (V)	I_D max (nA)	I_L min (μA)	λ_p typ (nm)	t_r, t_f typ (ns)	θ typ (deg.)
For AF	PN3206	Flat (Clear) 2 divisions	PFOS04-2	12	10	2	900	10	65
	PN312D(N)	Flat (Visible light cut) 2 divisions	PFES04-1N	30	20	8	940	10	65
	PN322D	Flat (Visible light cut) 2 divisions	PFOS04-2N	30	10	3	940	10	65
	PN3112	Flat (Visible light cut) PSD	PFOS04-2N	30	2	16	940	12μ	65
	PN3108	Flat (Visible light cut) PSD	PFOS04-2	30	2	7	940	5μ	65
	PNA3201F	Flat (Clear)	PFES04-3	30	2.0	22	900	12	—
For CD, VD	PN3405	Flat (Clear) 4 divisions	PFOS06-1	30	10	8	900	20	65
	PN316K2	Flat (Clear) 6 divisions	PFES08-4	30	1	0.1	900	3	65
	PN3116	Flat (Clear) 6 divisions	PFES02-1	30	10	typ 40	900	30	65
	PN3624K	Flat (Clear) chip slope 6 divisions	PFES08-1	30	10	0.1/0.8	850	3	65
For PF	PN330CL	TO-18 (Resin mold)	MR02-1	30	10	7	850	2	70
	PN334	5 ϕ Plastic	P5F02-3	30	10	5	850	2	30
	PN335	Side view	PSF02-1	30	10	5	850	2	70
For GF	PN331F	TO-18* (Flat can)	MF03-1	30	10	4	900	2	40
	PN331CL	TO-18* (3 lead)	MR03-1	30	50	10	900	50MHz	70
	PN332F	TO-18* (Flat can)	MF03-1	30	1	4	850	1	40
For control	PN300	TO-18* (Lens can)	ML02-1	50	10	30	800	1	10
	PN300F	TO-18* (Flat can)	MF02-1	50	10	5	800	1	40
	PN303	TO-39 (Flat can)	MF02-2	30	50	50	900	50	55
	PN307	Double end	PD002-1	30	40	5	800	—	24
	PN313	Side view (Visible light cut)	PSF02-2N	30	50	35	900	50	65
	PN313B	Side view (Responds to IR88)	PSF02-2N	30	50	15	960	50	65
	PN327	TO-92	PT002-1	30	50	70	900	50	70
	PN323	TO-92 (Responds to IR88)	PT002-1N	30	50	typ55	900	50	70
	PN323B	TO-92 (Responds to IR88)	PT002-1N	30	50	15	960	50	70
	PN328B	TO-92 (Responds to IR88)	PT002-1N	30	50	15	960	50	70
✪1	▲PNA3601M	Side view (Visible light cut)	PSLS 2-4	30	20	40	940	30	30

✪1. For space transmission *With shield pin, "For PF" is for Plastic Fiber, "For GF" is for Glass Fiber. ▲Under development

■ Photo ICs

Type Np.	Package	No.	V_{CC} (V)	P_D (mW)	I_{CC} (mA)	A (V/mW)	λ	Alin (%)	P_{dc} (I_X)	V_{on} (mVrms)
PN7103	Side view	PSF03-1	15	100	1.4	180	700	−10 ~ +10 P_{ac} =0.1 to 4μW	4000	1.0

Type No.	Package Features・applications	No.	V_{CC} (V)	I_{CC} (mA)	L (m)	f_O (kHz)	θ (deg.)
PNA4601M	Side view	PSLS3-3	5.0	2.3	10	36.7	43
PNA4602M	Side view	PSLS3-3	5.0	2.3	10	38.0	43
PNA4605M	Side view	PSLS3-3	5.0	2.3	10	40.0	43
PNA4608M	Side view	PSLS3-3	5.0	2.3	10	56.9	43
PNA4603H	Brightness adjustment	PSLS3-5	5 typ	1.0 typ	(V_{off}) 0.5 typ	(n)1.9V typ	(λ typ) 540nm
△ PNA4610M	Remote control light receiving section driven on 5V	PSLS3-3	5 typ	2.3	18	33	43
PNA4611M	Remote control light receiving section driven on 5V	PSLS3-3	5 typ	2.3	18	36.7	43
PNA4612M	Remote control light receiving section driven on 5V	PSLS3-3	5 typ	2.3	18	38	43
△ PNA4613M	Remote control light receiving section driven on 5V	PSLS3-3	5 typ	2.3	18	40	43
PNA4614M	Remote control light receiving section driven on 5V	PSLS3-3	5 typ	2.3	18	56.9	43

△Tentative

■ Photo ICs (Continued)

Type No.	Package	No.	V_{CC} (V)	P_D (mW)	I_{CC} typ (mA)	V_{off} (mV)	ΔV_{off} (mV)	f_C typ (MHz)	λp typ (nm)
△ PNA4211F	4*5 FLAT 10 pin	PFES 10-2	6	115	2.2	±20	±20	8.0	900

△Tentative

■ Phototransistors

Type No.	Package	No.	V_{CED} (V)	L (lx)	$I_{CE(L)}$ min (mA)	I_{CEO} max (μA)	θ typ (deg.)
PN101/102*	TO-18	ML02-1 /ML03-1	30	100	1.5	0.3	10
PN101F/102F*	TO-18	MF02-1 /MF03-2	30	100	0.1	0.3	40
PN106*	TO-18	ML03-1	30	100	0.3	0.1	10
PN107/108*	TO-18	ML02-1 /ML03-1	20	100	5	2	10
PN107F/108F*	TO-18	MF02-1 /MF03-2	20	100	0.4	2	40
PN108CL*	TO-18 (Small)	MR03-2	20	500	3.5	2	80
PN109L*	TO-18 (Visible light cut)	ML03-1	20	100	3.5	2	10
PN109F*	TO-18 (Visible light cut)	MF03-2	20	100	0.3	2	40
PN109CL	TO-18 (Visible light cut)	MR03-2	20	500	2.5	0.05	80
PN110*	5 ϕ Ceramic	C503-1	20	500	0.8	1	80
PN111W*	5 ϕ Ceramic	C503-1	20	500	4.5	2	80
PN115*	Side view	PSLS3-1	20	100	1.5	2	35
PN116*	Side view	PSF03-1	20	100	0.2	2	70
PN120S	3 ϕ Plastic	C302-1	30	2	3μA	0.5	50
PN121S	3 ϕ Plastic	C302-1	20	1000	0.12	0.1	30
PN123S	3 ϕ Plastic	C302-1	20	1000	0.4	0.1	30
PN126S	3 ϕ Plastic	C302-1	20	1000	1.05	0.1	30
PN127	Double end	PD002-1	20	1000	0.80	0.1	14
PN147	Double end	PD002-1	20	2	3μA	0.5	24
PN150/L	Side view	PSLS2-2	20	500	1	1	35
PN154	Side view	PSLS2-1	20	500	1	1	27
PN155	Side view	PSF02-1	20	100	0.05	1	70
PN158	Side view	PSLS2-3	20	500	1	1	40
PN163(NC)	Side view	PSLS2-7N	20	—	—	0.2	25
PN166	Side view	PSLS2-6N	20	—	—	0.2	35
PN168	3 ϕ Plastic	P3002-1	30	500	0.8	0.5	30
PN202S ◎	3 ϕ Plastic	C302-1	20	2	0.2	0.5	30
PN205/L(NC) ◎	Side view	PSLS2-2/ PSLS2-4N	20	2	0.2	0.5	35
PN207 ◎	Double end	PD002-1	20	2	0.5	0.5	18
PN208 ◎	Side view	PSLS2-3	20	2	0.2	0.5	40
PN268-(NC) ◎	3 ϕ Plastic	P3002-1N	20	2	0.05	0.5	30
PN263L-(NC) ◎	Side view	PSLS2-5N	20	—	—	0.5	25

*With Base Pin ◎Darlington Transistor

■ Photosensor Units

Type No.	Package No.	Character	Output ON Condition	V_{CC} (V)	I_O (mA)	V_O (V)	V_{OL} max (V)
ON1501	U03-1	Gap width 5mm, Depth 11mm, Open-collector, output, High resolution	At Object un -detection	24	50	40	0.6
ON1503	U04-1	Gap width 3.6mm, Depth 10mm, Open-collector output, High resolution	At detection	5.10	100	20	0.6
ON1517HH -(A)	U03-2	Gap width 5mm, Depth 10mm, Open collector output, High recolution	At detection	5	20	30	0.4
ON2509	U03-4	Reflection type, Open-collector output, Plain paper, OHP Film, Second original paper detectable	At object undetection	5	10	24	0.4
ON2521LA -(A)	U03-5	Reflection type, Open-collector output, Detectable distance range is 2.5 to 7.5mm	At object undetection	5	10	24	0.4

Integrated Photosensors

Type No.	Package No.	V_{CC} (V)	V_{OL} (V)	I_{OH} (μA)	I_{Fth} (mA)
ON1402A/B	IS5-1	4.5 to 16	0.25	100	5
ON1403A/B	I05-2	4.5 to 16	0.25	100	5
ON1413A/B	I05-1	4.5 to 16	0.14	100	4
ON1414A/B	I05-1	2.2 to 7	0.15	100	—

Photosensors for Interrupting (Photo Interrupters)

Type No.	Package No.	Features	I_F (mA)	V_{CEO} (V)	I_C min (mA)	I_{CEO} max (nA)	t_r, t_f typ (μs)	$V_{CE(sat)}$ max (V)
ON1002	I04-1	Ultra small type	50	35	0.04	100	35	0.4
ON1003	I04-2	Ultra small type	50	35	1.3	100	35	0.4
ON1004	I04-3	Ultra small type	50	35	0.4	100	35	0.4
ON1021	I04-4	Gap width 3mm	50	30	0.5	200	20	0.4
ON1022	IS4-1	Gap width 3mm	50	30	0.5	200	20	0.4
ON1023	IF4-1	Gap width 3mm	50	30	0.5	200	20	0.4
ON1024	I04-5	Gap width 5mm	50	30	0.5	200	20	0.4
ON1102	IS4-2	High Output	50	30	2	200	4	0.4
ON1105	IS4-3	High resolution	50	30	0.3	200	6	0.3
ON1108	I04-6	For PCB	50	30	2	200	4	0.4
ON1109	IS4-4	Deep and wide gap	50	30	0.3	200	6	0.3
ON1110	I04-8	High resolution	50	30	0.3	200	6	0.3
ON1111	IS4-5	High resolution, thin type	50	30	0.3	200	6	0.3
ON1112	I04-9	High resolution, thin type	50	30	0.3	200	6	0.3
ON1113	IF4-2	High resolution, thin type	50	30	0.3	200	6	0.5
ON1114	I04-9	High resolution	50	30	0.7	200	6	0.3
ON1120	I04-10	Wide gap	50	20	1.0	200	6	0.4
ON1122*	IS4-2	General purpose	25	30	0.1	200	6	0.5
ON1128*	I04-6	For PCB	25	30	0.1	200	6	0.5
ON1128S*	I04-7	With metal slit	25	30	0.05	200	6	0.5
ON1179	I04-11	High resolution, thin type	50	30	0.3	200	6	0.3
ON1215 ◎*	IS4-3	Disturbance light protection type	25	20	2	600	100	1.5
CNA1003H	I04-13	High resolution	50	30	0.5	200	5	0.4
CNA1006N	IS4-6	Horizontal sensor with hook	50	30	0.7	200	5	0.4

◎ Darlington output * Visible light emitting diode

Optoisolators

Type No.	Package No.	Features	V_{CEO} *V_R **V_O (V)	V_{ISO} min (V_{RMS})	CTR (%)	t_r typ (μs)
ON3131	HD4-2	High breakdown voltage	80	5000	200typ	2
ON3132	HD8-2	High breakdown voltage (2 reams)	80	5000	200typ	2
ON3133	HD12-2	High breakdown voltage (3 reams)	80	5000	200typ	2
ON3134	HD16-2	High breakdown voltage (4 reams)	80	5000	200typ	2
ON3171	HD4-1	High breakdown voltage	80	5000	50 to 600	4
ON3181	HD4-2	High breakdown voltage AC input	80	5000	20 to 300	4
ON3182	HD8-2	High breakdown voltage AC input (2 reams)	80	5000	20 to 300	4
ON3183	HD12-2	High breakdown voltage AC input (3 reams)	80	5000	20 to 300	4
ON3184	HD16-2	High breakdown voltage AC input (4 reams)	80	5000	20 to 300	4
ON3205 ◎	HO4-2	High breakdown voltage	20	5000	700typ	100
ON3401**	HD6-1	High speed response, High transfer efficiency	**15	2500	15 to 60	0.4
ON3731/A ◎	HD4-2	High breakdown voltage	300/350	5000	4000 typ	40
ON3732/A ◎	HD8-2	High breakdown voltage AC input (2 reams)	300/350	5000	4000 typ	40
ON3734/A ◎	HD16-2	High breakdown voltage AC input (4 reams)	300/350	5000	4000 typ	40
ON3105	HO4-2	High speed response, High breakdown voltage	30	5000	≧15	4

◎Darlington output **Photo IC output

Reflective Photosensors (Photo Reflectors)

Type No.	Package No.	Features	I_F (mA)	V_{CEO} (V)	I_C min (mA)	I_{CEO} max (μA)	t_r, t_f typ (μs)	$V_{CE(sat)}$ max (V)
ON2152	R004-1	High speed response	100	20	0.8	2	8	0.6
ON2153	R004-2	High speed response	50	30	0.1	0.2	6	0.5
ON2253 ◎	R004-2	High sensitivity	50	20	3	0.5	150	1.5
ON2170	RSS4-1	Visible light cut, small, thin type	50	30	0.045	0.2	20	0.4
ON2171	R0D4-1	Visible light cut, small type	50	30	0.8	0.2	20	0.5
ON2173	R004-3	High speed response	50	20	0.1	0.2	6	0.3
ON2179	R004-4	High speed response	50	5	0.18	0.2	20	0.5
ON2175	RB04-1	Tape end, detection	50	30	0.1	0.2	6	0.5
ON2180	RSS4-1	Visible light cut, small, thin type	50	30	0.045	0.2	20	0.4
ON2270 ◎	RSS4-1	Visible light cut, small, thin type	50	20	0.17	0.5	150	1.5
ON2280 ◎	RSS4-1	Visible light cut, small, thin type	50	20	0.17	1	150	1.5
CNB1001 ※	RSS4-2	Visible light cut, small, thin type	50	35	0.09	0.1	30	0.4
CNB1002 ※	RSS4-2	Visible light cut, small, thin type	50	35	0.09	0.1	30/40	0.4
△ CNB1003 ※	RSS4-2	Video headphone, etc. reel sensor	50	35	0.023	0.1	30/40	0.4
△ CNB1004 ※	RSS4-2	Video headphone, etc. reel sensor	50	35	0.023	0.1	30/40	0.4
△ CNB1005 ※	RSS4-2	Visible light cut, small, thin type	50	35	0.023	0.1	30/40	0.4
CNB2001 ※	RSS4-2	Video headphone, etc. reel sensor	50	35	0.52	1	120/115	1.2
△ CNB2002 ※	RSS4-2	Video headphone, etc. reel sensor	50	35	0.52	1	120/115	1.2
CNB2003 ※	RSS4-3	Visible light cut, small, thin type	50	35	0.52	1	120/115	1.2
△ CNB2004 ※	RSS4-2	Video headphone, etc. reel sensor	50	35	0.52	1	120/115	1.2

◎ : Darlington output △ Tentative ※Surface mount device

Reflective Photosensors (Super Mini Interrupters)

Type No.	Package No.	Features	I_F (mA)	V_{CEO} (V)	I_C min (mA)	I_{CEO} max (μA)	t_r, t_f typ (μs)	$V_{CE(sat)}$ max (V)
CNA1301H	Clear, small type I04-14	Ultra small type, P board mounting by insertion	50	35	100	0.1	35	0.4
△ CNA1311K	Clear, small type I04-14	Ultra small type 1.0mm Gap	50	35	50	0.1	35	0.4
△ CNA1312K	Clear, small type I04-14	Ultra small type 2.0mm Gap	50	35	40	0.1	35	0.4

△Tentative

Optical Fiber Units

Optical-Fiber Connector-Modules

Type No.		Package No.	Quantum Efficiency η min (%)	Peak Sensitivity Wave Length λp typ (nm)	Leak Current I_D max (nA)	Frequency f_C typ (MHz)
Reception	PN335-004	JP02	60*1	900	10	50

*1 Plastic Fiber (1mm ϕ)

Hologram Unit

Applications	Type No.	Package No.	P_O (mW)	$V_{R(LD)}$ (V)	V_R (mon.) (V)	V_R (V)	I_{th} typ (mA)	I_{op} typ (mA)	V_{op} typ (V)	λ_L typ (nm)	I_P (mon.) typ (mA)
CD/CD-ROM	HUL7001	LDHU01	0.3	2	12	12	30	35	1.9	790	0.7
	△HUL7281	LDHU01	0.3	2	12	—	30	35	1.9	795	0.7
✪1	△HUL7202	LDHU01	0.3	2	6	—	30	35	1.9	800	0.7

✪1. For car mounting △Tentative

Optical transmission module

Applications	Type No.	Package	V_{CC} max (V)	I_{CC} max (mA)	KDPS max	IFP max (A)	I_{CH} max (mW/Sr)	$L_{MAX.}$ min (m)
✪1	△CND0002A	HDMJ08-1	3	1.2	115.2	0.5	250	1

✪1. For space transmission △Tentative

Package Outlines of Opto-Electronic Devices


ML02-1

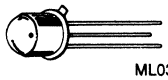
ML03-1


MF02-1

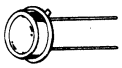
MF02-2

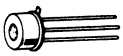
MF03-1

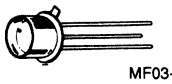
MF03-2


MFL2-1

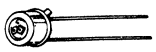
MFL2-2

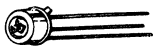
MFL3-1

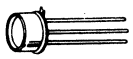
MFL3-2

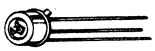
MFL3-3


MFM3-1


MR02-1


MR02-2


MR03-1

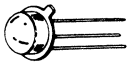
MR03-2

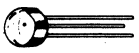
C503-1

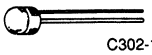
C302-1

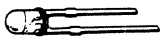
P3002-1

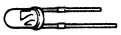
P3002-2

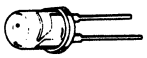
P5002-1

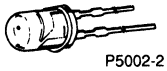
P5002-2

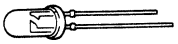
P5002-4

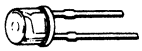
P5F02-1

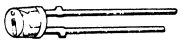
P5F02-3

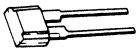
PSF02-1


PSF02-2


PSF03-1


PSLS2-1

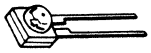
PSLS2-2

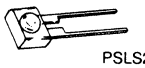
PSLS2-3

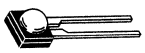
PSLS2-4


PSLS3-1


PSLS3-3


PSLD2-1

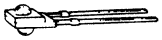
PSLD2-2


PT002-1


PD002-1


PR002-1


PFOS04-XN

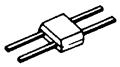
PFOS04-X

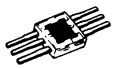
PFOS06-1


PFES08-X

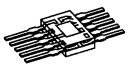
PFES10-2

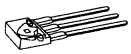
PSF03-2N


L5

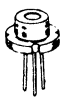
L9


LS

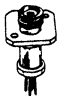
LMC4


HDMJ08-1

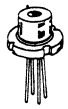
L9D4-1


LMD-1


LMD-2


LDHU01


I04-1


I04-2


I04-3


I04-4


I04-5


I04-6


I04-7


I04-8


I04-9


I04-10


I04-11


I04-14


I05-1


I05-2


IS4-1


IS4-2


IS4-3


IS4-4


IS4-5


IS4-6


IS5-1


IF4-1


IF4-2


R004-1


R004-2


R004-3


I04-15


R004-4


RSS4-1


RSS4-2


RSI4-1


R0D4-1


RB04-1


H04-1


H04-2


HD4-1


HD4-2


HD8-1


HD12-1


HD16-1


HD6-1


JP02


I04-16


I04-17

■ Point Lighting LEDs (Round Type)

Shape	Package No.	Red		Green		Amber		Orange	
		Type No.	Lens Color	Type No.	Lens Color	Type No.	Lens Color	Type No.	Lens Color
ϕ 5.0mm	01	LN21RPHL	Red diffusion	LN31GPHL	Green diffusion	LN41YPHL	Amber diffusion	LN81RPHL	Red diffusion
		LN21RCPHL	Red clear	LN31GCPHL	Green clear	LN41YCPHL	Amber clear	LN81RCPHL	Red clear
		LN21WPHL	White diffusion	LN31GPHL(G)	Green diffusion			LN81WPHL	White diffusion
		LN21CPHL	Clear	LN31GCPHL(G)	Green clear	LN41CPHL	Clear	LN81CPHL	Clear
		LN21RPSL	Red diffusion	LN31GPSL	Green diffusion	LN41YPSL	Amber diffusion		
		LN21RCPSL	Red clear	LN31GCPSL	Green clear	LN41YCPSL	Amber clear		
		LN21WPSL	White diffusion						
		LN21CPSL	Clear						
		LN21RPH	Red diffusion	LN31GPH	Green diffusion	LN41YPH	Amber diffusion	LN81RPH	Red diffusion
		LN21RCPH	Red clear	LN31GCPH	Green clear	LN41YCPH	Amber clear	LN81RCPH	Red clear
		LN21WPH	White diffusion	LN31YPH	Yellow diffusion			LN81WPH	White diffusion
		LN21CPH	Clear	LN31YCPH	Yellow clear			LN81CPH	Clear
		LN21RPX	Red diffusion	LN31GPX	Green diffusion	LN41YPX	Amber diffusion		
ϕ 4.8mm	02	LN264RCP	Clear	LN364GCP	Green clear	LN464YCP	Amber clear	LN864RCP	Red clear
	01	LN21RCPSS	Red clear	LN31GCPSS	Green clear	LN41YCPSS	Amber clear		
ϕ 4.4mm	03	LN240RPX	Red diffusion	LN340GPX	Green diffusion	LN440YPX	Amber diffusion	LN840RPX	Red diffusion
ϕ 4.0mm	01	LN29RPP	Red diffusion	LN39GPP	Green diffusion	LN49YPP	Amber diffusion	LN89RPP	Red diffusion
		LN29RCPP	Red clear	LN39GCPP	Green clear	LN49YCPP	Amber clear	LN89RCPP	Red clear
		LN29WPP	White diffusion						
		LN29CPP	Clear	LN39CPP	Clear				
ϕ 3.7mm	04	LN253RP	Red diffusion	LN353GP	Green diffusion	LN453YP	Amber diffusion		
ϕ 3.5mm	05	LN25RP	Red diffusion	LN35BP	Blue diffusion	LN45YP	Amber diffusion	LN85RP	Red diffusion
		LN25RCP	Red clear	LN35GP	Green diffusion	LN45YCP	Amber clear	LN85RCP	Red clear
		LN25WP	White diffusion	LN35GCP	Green clear				
		LN25CP	Clear						
ϕ 3.2mm	01	LN276RPX	Red diffusion	LN376GPX	Green diffusion	LN476YPX	Amber diffusion		
		LN276RCPX	Red clear	LN376GCPX	Green clear	LN476YCPX	Amber clear	LN876RCPX	Red clear
ϕ 3.0mm	01	LN28RPP	Red diffusion	LN38GPP	Green diffusion	LN48YPP	Amber diffusion	LN88RPP	Red diffusion
		LN28RCPP	Red clear	LN38GCPP	Green clear	LN48YCPP	Amber clear	LN88RCPP	Red clear
		LN28WPP	White diffusion						
		LN28CPP	Clear	LN38CPP	Clear	LN48CPP	Clear		
		LN28RPX	Red diffusion	LN38GPX	Green diffusion	LN48YPX	Amber diffusion	LN88RPX	Red diffusion
	06	LN28RPPN	Red diffusion	LN38GPPN	Green diffusion	LN48YPPN	Amber diffusion	LN88RPPN	Red diffusion
	03	LN277RPX	Red diffusion	LN377GPX	Green diffusion	LN477YPX	Amber diffusion	LN877RPX	Red diffusion
		LN277RCPX	Red clear	LN377GCPX	Green clear	LN477YCPX	Amber clear		
	07	LN238RPH	Red diffusion	LN338GPH	Green diffusion	LN438YPH	Amber diffusion	LN838RPH	Red diffusion
ϕ 2.8mm	02	LN263CPP	Clear	LN363GCPP	Green clear	LN463YCPP	Amber clear	LN863RCPP	Red clear
ϕ 2.6mm	08	LN221RP	Red diffusion	LN321GP	Green diffusion	LN421YP	Amber diffusion		
		LN221RPH	Red diffusion	LN321GPH	Green diffusion	LN421YPH	Amber diffusion		
		LN221RPX	Red diffusion	LN321GPX	Green diffusion				
ϕ 2.0mm	10	LN230RPP	Red diffusion	LN330GPP	Green diffusion	LN430YPP	Amber diffusion	LN830RPP	Red diffusion
		LN222RP	Red diffusion	LN322GP	Green diffusion	LN422YP	Amber diffusion		
		LN222RPH	Red diffusion	LN322GPH	Green diffusion	LN422YPH	Amber diffusion		
		LN222RPX	Red diffusion	LN322GPX	Green diffusion				
	08	LN282RPX	Red diffusion	LN382GPX	Green diffusion	LN482YPX	Amber diffusion	LN882RPX	Red diffusion

△Tentative

(Package)

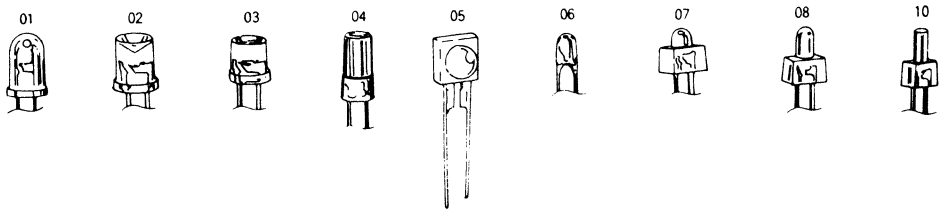

Visible Light Emitting Diodes

■ Point Lighting LEDs (Square Type)

Shape	Package No.	Red		Green		Amber		Orange	
		Type No.	Lens Color	Type No.	Lens Color	Type No.	Lens Color	Type No.	Lens Color
□5.7 ×2.7mm	11	LN249RP	Red diffusion	LN349GP	Green diffusion	LN449YP	Amber diffusion	LN849RP	Red diffusion
		LN249RPH	Red diffusion	LN349GPH	Green diffusion	LN449YPH	Amber diffusion	LN849RPH	Red diffusion
		LN249RPX	Red diffusion	LN349GPX	Green diffusion			LN849RPX	Red diffusion
□5.3 ×1.8mm	11	LN217RP	Red diffusion	LN317GP	Green diffusion	LN417YP	Amber diffusion		
		LN217RPH	Red diffusion	LN317GPH	Green diffusion	LN417YPH	Amber diffusion		
□5.0 ×5.0mm	12	LN250RP	Red diffusion	LN350GP	Green diffusion	LN450YP	Amber diffusion	LN850RP	Red diffusion
		LN250RPH	Red diffusion	LN350GPH	Green diffusion	LN450YPH	Amber diffusion	LN850RPH	Red diffusion
		LN250RPX	Red diffusion	LN350GPX	Green diffusion			LN850RPX	Red diffusion
	13	LN273RP	Red diffusion	LN373GP	Green diffusion	LN473YP	Amber diffusion	LN873RP	Red diffusion
		LN273RPH	Red diffusion	LN373GPH	Green diffusion	LN473YPH	Amber diffusion	LN873RPH	Red diffusion
		LN273RPX	Red diffusion	LN373GPX	Green diffusion	LN473YPX	Amber diffusion	LN873RPX	Red diffusion
□5.0 ×2.5mm	11	LN213RPP	Red diffusion	LN313GPP	Green diffusion	LN413YPP	Amber diffusion		
	14	LN219RP	Red diffusion	LN319GP	Green diffusion	LN419YP	Amber diffusion	LN819RP	Red diffusion
□5.0 ×2.0mm	11	LN248RP	Red diffusion	LN348GP	Green diffusion	LN448YP	Amber diffusion	LN848WP	White diffusion
		LN248RPH	Red diffusion	LN348GPH	Green diffusion	LN448YPH	Amber diffusion	LN848WPH	White diffusion
	15	LN242RP	Red diffusion	LN342GP	Green diffusion	LN442YP	Amber diffusion	LN842RP	Red diffusion
		LN242RPH	Red diffusion	LN342GPH	Green diffusion	LN442YPH	Amber diffusion	LN842RPH	Red diffusion
		LN242RPX	Red diffusion	LN342GPX	Green diffusion	LN442YPX	Amber diffusion	LN842RPX	Red diffusion
□5.0 ×1.5mm	11	LN229RP	Red diffusion	LN329GP	Green diffusion	LN429YP	Amber diffusion		
		LN229RPH	Red diffusion	LN329GPH	Green diffusion	LN429YPH	Amber diffusion		
□5.0 ×1.0mm	11	LN224RP	Red diffusion	LN324GP	Green diffusion	LN424YP	Amber diffusion		
		LN224RPH	Red diffusion	LN324GPH	Green diffusion	LN424YPH	Amber diffusion		
		LN224WPH	White diffusion	LN324WPH	White diffusion	LN424WPH	White diffusion		
		LN224RPX	Red diffusion	LN324GPX	Green diffusion	LN424YPX	Amber diffusion		
		LN268RP	Red diffusion	LN368GP	Green diffusion	LN468YP	Amber diffusion		
		LN268RPH	Red diffusion	LN368GPH	Green diffusion	LN468YPH	Amber diffusion		
□4.0 ×4.0mm	12	LN252RP	Red diffusion	LN352GP	Green diffusion	LN452YP	Amber diffusion		
		LN252RPH	Red diffusion	LN352GPH	Green diffusion	LN452YPH	Amber diffusion		
		LN252RPX	Red diffusion	LN352GPX	Green diffusion	LN452YPX	Amber diffusion		
□4.0 ×2.0mm	15	LN251RPP	Red diffusion	LN351GPP	Green diffusion	LN451YPP	Amber diffusion	LN851RPP	Red diffusion
		LN251RCPP	Red clear	LN351GCPP	Green clear	LN451YCPP	Amber clear	LN851RCPP	Red clear
		LN251RPX	Red diffusion	LN351GPX	Green diffusion	LN451YPX	Amber diffusion		
□3.9 ×1.75mm	15	LN275RPX	Red diffusion	LN375GPX	Green diffusion			LN875RPX	Red diffusion
□3.0 ×7.0mm	16	LN216RP	Red diffusion	LN316GP	Green diffusion	LN416YP	Amber diffusion	LN816RP	Red diffusion
		LN216RPH	Red diffusion	LN316GPH	Green diffusion	LN416YPH	Amber diffusion	LN816RPH	Red diffusion
□3.0 ×2.0mm	15	LN260RPP	Red diffusion			LN460YPP	Amber diffusion		
		LN260RCPP	Red clear	LN360GCPP	Green clear	LN460YCPP	Amber clear		
		LN260RPX	Red diffusion	LN360GPX	Green diffusion	LN460YPX	Amber diffusion		
		LN260RCPX	Red clear	LN360GCPX	Green clear	LN460YCPX	Amber clear		
□1.8 ×1.8mm	17	LN265RPH	Red diffusion	LN365GPH	Green diffusion	LN465YPH	Amber diffusion		
□1.75 × 7.0mm	16	LN220RP	Red diffusion	LN320GP	Green diffusion	LN420YP	Amber diffusion	LN820RP	Red diffusion
		LN220RPH	Red diffusion	LN320GPH	Green diffusion	LN420YPH	Amber diffusion	LN820RPH	Red diffusion
□1.0 ×4.0mm	18	LN233RP	Red diffusion	LN333GP	Green diffusion	LN433YP	Amber diffusion		
		LN233RPH	Red diffusion	LN333GPH	Green diffusion				
		LN287RPX	Red diffusion	LN387GPX	Green diffusion	LN487YPX	Amber diffusion		
□1.0 ×2.0mm	18	LN281RPX	Red diffusion						

△Tentative

(Package)

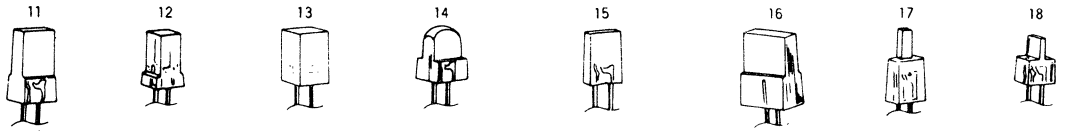

■ Point-Lighting LEDs (Small Type)

Shape	Package No.	Red		Green		Amber		Orange	
		Type No.	Lens Color	Type No.	Lens Color	Type No.	Lens Color	Type No.	Lens Color
Mini bright	19	LN01201C(Q)	Clear	LN01301C(Q)	Clear	LN01401C(Q)	Clear	LN01801C(Q)	Clear
		LN01201C(Q)-(L)	Clear	LN01301C(Q)-(L)	Clear	LN01401C(Q)-(L)	Clear	LN01801C(Q)-(L)	Clear
	20	LN01203C-(L)	Clear	LN01303C-(L)	Clear	LN01403C-(L)	Clear	——	—

■ Point-Lighting LEDs (Surface-mount chip LED)

Shape	Package No.	Red		Ultra Bright Red		Green		Uiltra Bright Green	
		Type No.	Lens Color	Type No.	Lens Color	Type No.	Lens Color	Type No.	Lens Color
SS	24			LNJ208R8ARA	Red diffusion	LNJ308G8LRA ★	Green diffusion		
S-GW	24	LN1271R-(TR)	Red diffusion	LN1271RAL-(TR)	Red diffusion	LN1371G-(TR)	Green diffusion	LN1371G6U(TR)	Green diffusion
S-J	24	LNJ206R5RRX	Red diffusion	LNJ206R5ARA	Red diffusion	LNJ306G5URA	Green diffusion		
GW	23	LN1261C-(TR)	Clear	LN1261CAL-(TR)	Clear	LN1361C-(TR)	Clear		
J	32	LN1251C-(TR)	Clear	LN1251CAL-(TR)	Clear	LN1351C-(TR)	Clear		
S-GW 2 Color	32	LNJ107W5PRW White diffusion (Lighting color : High bright green / Ultra bright red)							
GW 2 Color	32	LN2162C13-(TR)Clear (Lighting color : Green / Red)							

Shape	Package No.	Orange		Soft Orange		Amber	
		Type No.	Lens Color	Type No.	Lens Color	Type No.	Lens Color
SS	24	LNJ808R8ERA ★	Red diffusion			LNJ408K8ZRA ★	Yellow diffusion
S-GW	24			LN1871Y5-(TR)	Yellow diffusion	LN1471Y-(TR)	Yellow diffusion
S-J	24			LNJ806K5SRX	Yellow diffusion		
GW	23	LN1861C-(TR)	Clear			LN1461C-(TR)	Clear
J	22	LN1851C-(TR)	Clear			LN1451C-(TR)	Clear
S-GW 2 Color	32	LNJ107W5ARA1 White diffusion (Lighting color : Orange / Green)					
GW 2 Color	32	LN2162C68-(TR) Clear (Lighting color : Orange / Pure green)					

★ : Low current

■ Ultra High-Brightness Point-Lighting LEDs (GaAlAs)

Shape	Package No.	Red			
		Type No.	Lens Color	Type No.	Lens Color
ϕ 5.0mm	28	LN21RAL(U)	Red diffusion	LN21CAL(U)	Clear
		LN21RCAL(U)	Red clear	LN21CAL(UQS)	Clear
		LN21WAL(U)	White diffusion	LN21CAL(UQPS)	Clear
		LN289CUQ	Clear		
ϕ 4.0mm	29	LN240CALF(U)	Clear		
ϕ 3.0mm	28	LN28RAL(US)	Red diffusion		
		LN28RCAL(US)	Red clear		
		LN28WAL(US)	White diffusion		
		LN28CAL(US)	Clear		
	29	LN277WALX	White diffusion	LN277CALX	Clear

■ Ultra High-Brightness Point-Lighting LEDs (GaAlAs)

Shape	PackageNo.	Red	
		Type No.	Lens Color
□5.0 ×2.0mm	30	LN242RAL(U)	Red diffusion
	31	LN248WAL(U)	White diffusion
□4.0 ×2.0mm	30	LN251CAL(U)	Clear
Mini bright	19	LN01201CAL(U)	Clear

■ NEW High-Brightness High-Reliability Blue LED

Shape	PackageNo.	Type No.	Lens Color
ϕ 5.0mm	28	LNG992CF9	Blue clear
		LNG901CF9	Blue clear
		LNG91LCF9	Blue clear
ϕ 3.0mm	28	LNG908CK9	Blue clear
		LNG993CK9	Blue clear

(Package)

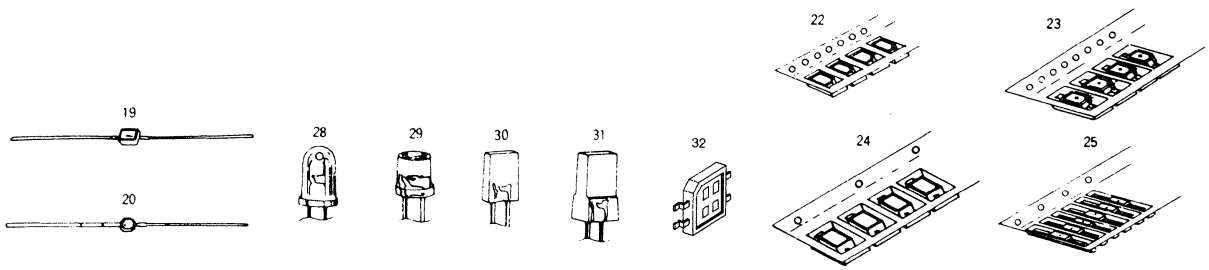

Visible Light Emitting Diodes

■ Radial Taping (Round Type)

Shape	Taping Shape No.	Dimensions(a) (mm)	Representative Type No. Emitted Color (Red)
ϕ 5.0mm	*1	18.5	LN21RPH-(TA3)
	*1	18.0	LN21RPH-(TA5)
	*3	18.0	LN21RPH-(TT5)
	*3	17.0	LN21RPH-(TT2)
	*1	17.0	LN21RPH-(TA2)
	*1	16.0	LN21RPH-(TA)
ϕ 4.4mm	*1	12.0	△LN240RPX-(TA)
ϕ 4.0mm	*1	16.0	LN29RPX-(TA8)
	*1	15.5	LN29RPX-(TA3)
	*1	13.5	LN29RPX-(TA6)
	*1	12.5	△LN29RPX-(TA5)
	*2	12.5	LN29RPX-(TX5)
	*2	12.0	LN29RPX-(TX4)
	*1	12.0	△LN29RPX-(TA4)
	*2	10.0	LN29RPX-(TX2)
	*1	9.5	LN29RPX-(TA)
ϕ 3.2mm	*2	14.0	LN276RCPX-(TX8)
	*2	13.0	△LN276RCPX-(TX7)
	*2	12.5	△LN276RPX-(TX3)
	*2	12.0	LN276RCPX-(TX6)
	*2	11.5	△LN276RPX-(TX2)
	*1	11.0	LN276RPX-(TA5)
	*1	10.5	LN276RPX-(TA4)
	*1	9.5	LN276RPX-(TA9)
	*1	8.5	LN276RPX-(TA)
	*2	8.5	LN276RPX-(TX)
ϕ 3.0mm	*3	15.0	LN28RPX-(TT2)
	*1	14.0	LN28RPX-(TA11)
	*1	13.5	LN28RPX-(TA10)
	*1	13.0	LN28RPX-(TA6)
	*1	12.5	LN28RPX-(TA12)
	*3	12.0	LN28RPX-(TT)
	*1	11.5	LN28RPX-(TA7)
	*1	10.5	LN28RPX-(TA4)
	*1	10.0	LN28RPX-(TA5)
	*1	9.5	LN28RPX-(TA8)
	*3	9.5	LN28RPX-(TT8)
	*1	9.0	LN28RPX-(TA3)
ϕ 2.6mm	*1	13.0	LN221RPX-(TA3)
	*1	12.5	LN221RPX-(TA2)
ϕ 2.0mm	*1	17.5	LN222RPX-(TA4)
	*1	17.0	△LN222RPX-(TA5)
	*2	17.0	LN222RPX-(TX5)
	*1	16.0	LN222RPX-(TA6)
	*1	14.0	△LN222RPX-(TA3)
	*1	13.0	LN222RPX-(TA)
	*2	12.5	LN282RPX-(TX2)
	*3	12.5	LN282RPX-(TT2)
	*1	12.0	LN282RPX-(TA4)

△Tentative

■ Radial Taping (Square Type)

Shape	Taping Shape No.	Dimensions (a) (mm)	Representative Type No. Emitted Color (Red)
□5.7 ×2.7mm	*1	15.0	LN249RPX-(TAB)
□5.0 ×5.0mm	*1	14.5	LN250RPX-(TA)
	*1	13.0	△LN273RPX-(TA)
	*1	12.5	△LN273RPX-(TA2)
	*2	12.5	△LN273RPX-(TX2)
□5.0 ×2.0mm	*1	17.5	LN242RPX-(TA6)
	*2	17.5	LN242RPX-(TX6)
	*1	16.5	△LN242RPX-(TA)
	*3	16.5	LN242RPH-(TT)
	*1	14.0	LN242RPX-(TA5)
	*1	13.5	LN242RPX-(TA4)
	*2	13.5	LN242RPX-(TX4)
	*1	12.5	LN242RPX-(TA3)
	*1	12.0	LN242RPX-(TA7)
	*2	12.0	LN242RPX-(TX7)
	*1	11.0	LN242RPX-(TA2)
□5.0 ×1.5mm	*1	17.0	LN229RPH-(TA)
□5.0 ×10mm	*1	17.0	LN224RPH-(TA)
	*1	16.5	LN224RPX-(TAB7)
	*1	15.0	LN224RPX-(TAB8)
	*1	14.5	LN224RPX-(TAB4)
	*1	14.0	LN224RPX-(TAB6)
	*2	14.0	LN224RPX-(TXB6)
	*1	13.0	LN224RPX-(TAB2)
□4.0 ×4.0mm	*1	17.0	LN252RPH-(TA)
	*1	12.5	LN252RPX-(TAB2)
□3.9 × 1.75mm	*1	14.5	LN275RPX-(TA3)
	*3	13.0	LN275RPX-(TT)
	*3	12.0	LN275RPX-(TT2)
□1.8 ×1.8mm	*3	18.0	LN265RPH-(TT)
	*1	16.0	LN265RPH-(TA2)
□1.0 ×4.0mm	*1	13.5	LN287RPX-(TA3)
	*1	13.0	△LN287RPX-(TA2)
	*1	12.5	LN287RPX-(TA)

△Tentative

(Taping Shape)

*1

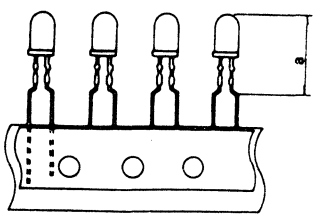

*2

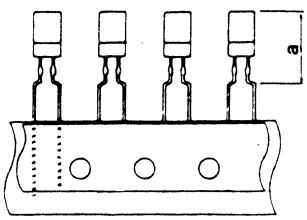

*3

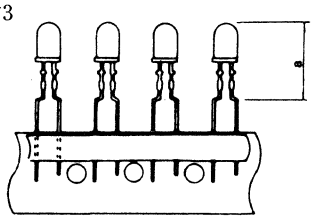

■ Numerical Display Devices

Digit (Size)		+1 Display (0.3 inch)	+1 Display (0.4 inch)	+1 Display (0.6 inch)	1 Digit (0.3 inch)		
Appearance		+1.			8.		
Emitted color	Red	LN503R	LN504R	LN506RA/RK	LN513RA/RK	LN513RAM/RKM	△LN513RAS/RKS
	Green	LN503G	LN504G	LN506GA/GK	LN513GA/GK	LN513GAM/GKM	△LN513GAS/GKS
	Amber	LN503Y	LN504Y	LN506YA/YK	LN513YA/YK	LN513YAM/YKM	LN513YAS/YKS
	Orange	——	——	LN506OA/OK	LN513OA/OK	LN513OAM/OKM	LN513OAS/OKS

Digit (Size)		1 Digit (0.4 inch)	1 Digit (0.6 inch)	1 Digit (0.8 inch)	1 Digit (1.0 inch)	2 Digits (0.3 inch)	2 Digits (0.4 inch)
Appearance		8.		.8.	8.	8.8.	
Emitted color	Red	LN514RA/RK	LN516RA/RK	LN518RA/RK	LN5110ALAMW/ALKMW	△LN523RAMR/RKMR	LN524RA/RK
	Green	LN514GA/GK	LN516GA/GK	LN518GA/GK	△LN5110GAMW/GKMW	LN523GAMG/GKMG	LN524GA/GK
	Amber	LN514YA/YK	LN516YA/YK	LN518YA/YK	——	△LN523YAMY/YKMY	LN524YA/YK
	Orange	LN514OA/OK	LN516OA/OK	LN518OA/OK	LN5110OAMW/OKMW	——	LN524OA/OK

Digit (Size)		2 Digits (0.4 inch)		2 Digits (0.6 inch)	2 Digits (0.8 inch)	3 Digits (0.3 inch)	
Appearance		8.8.	88	8.8.		8.8.8.	
Emitted color	Red	LN524RAMR/RKMR	LN524RAS/RKS	LN526RA/RK	LN528RA/RK	LN533RAMR/RKMR	LN533RAMRS/RKMRS
	Green	LN524GAMG/GKMG	LN524GAS/GKS	LN526GA/GK	△LN528GA/GK	LN533GAMG/GKMG	△LN533GAMGS/GKMGS
	Amber	△LN524YAMY/YKMY	△LN524YAS/YKS	LN526YA/YK	△LN528YA/YK	LN533YAMY/YKMY	△LN533YAMYS/YKMYS
	Orange	△LN524OAMO/OKMO	△LN524OAS/OKS	LN526OA/OK	△LN528OA/OK	△LN533OAMO/OKMO	——

Digit (Size)		3 Digits (0.4 inch)		3 Digits (0.6 inch)	4 Digits (0.3 inch)		
Appearance		8.8.8.	188	8.8.8.	:8.8:8.8:	:8 8:8.8:	:18:8.8.
Emitted color	Red	LN534RAMR/RKMR	△LN5341RAZ2/RKZ2	LN536RAMR/RKMR	LN543RAN8/RKN8	△LN543RAHN4/RKHN4	LN5431RAMR/RKMR
	Green	LN534GAMG/GKMG	△LN5341GAZ2/GKZ2	LN536GAMG/GKMG	LN543GAN8/GKN8	△LN543GAHN4/GKHN4	LN5431GAMG/GKMG
	Amber	△LN534YAMY/YKMY	△LN5341YAZ2/YKZ2	LN536YAMY/YKMY	——	——	LN5431YAMY/YKMY
	Orange	LN534OAMO/OKMO	——	——	LN543OAN8/OKN8	——	LN5431OAMO/OKMO

△Tentative

Digit (Size)		4 Digit (0.3 inch)
Appearance		:18:8.8:
Emitted color	Red	△LN5431RAMR5/RKMR5
	Green	△LN5431GAMG5/GKMG5
	Amber	△LN5431YAMY5/YKMY5

△Tentative

■ Numerical Display Devices (Two Colors)

Digit (Size)	1 Digit (0.6 inch)	1 Digit (1.0 inch)	2 Digits (0.6 inch)
Appearance	8.		8.8.
——	LN516RGA	LN5110OGAMW	LN526RGA

Visible Light Emitting Diodes

■ LED Lamps for Outdoor Use

ϕ30mm	ϕ50mm	30mm (square)	30mm (square)
Hood is option	Hood is option	Full Color	Full Color
		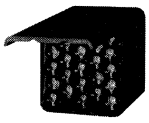	
LNQ13001	LNQ15001	LNQ70402G	LNQ70301G

■ Panel Display Units

ϕ2.0mm	ϕ3.0mm		
32 ×16 dots	16 ×16 dots	32 ×16 dots	24 ×24 dots
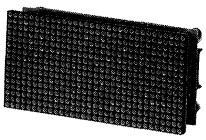		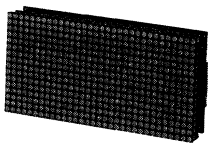	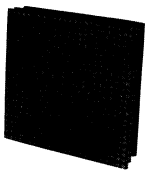
LNP172013	LNP123031	LNP173011	LNP143021

ϕ5.0mm		ϕ8.0mm	
16 ×16 dots	32 ×16 dots	16 ×16 dots	16 ×16 dots Outdoors, Water proof
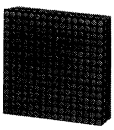	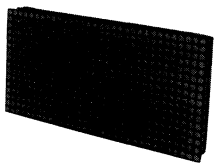	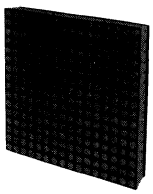	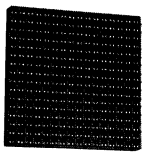
LNP125021	LN5121291UNBH	LN2561244UNB	LNP128011

18.0mm (square)	ϕ3.0mm		ϕ5.0mm
16 ×16 dots R.G Outdoors, Water proof 16 ×16 dots Full Color	16 ×16 dots High-brightness w/ Surface gray scale	24 ×24 dots High-brightness w/ Surface gray scale	16 ×16 dots High-brightness w/ Surface gray scale
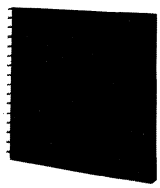	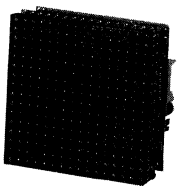	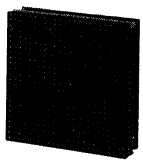	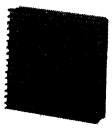
LNP120011/LNP720011G	LNP123021	LNP143011	LNP125031

■ LED Line-Lighting Source Units

A4 Size	B4 Size
	
LNR304701	LNR314701

Package Outlines

Package Outlines (MOS LSI)

● DIL Packages

Unit: mm

L1 DIP008-P-0300

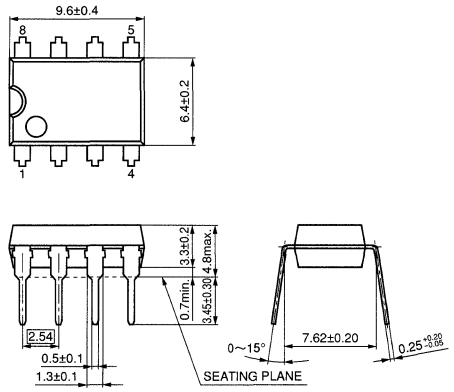

L2 DIP014-P-0300C

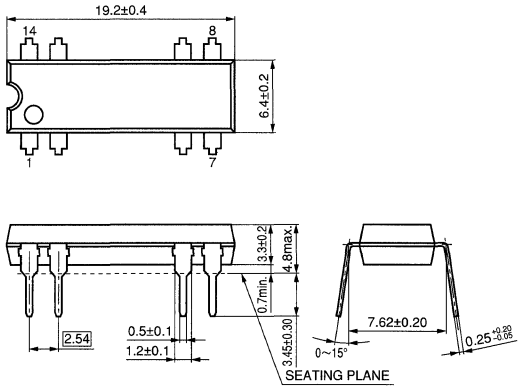

L3 DIP018-P-0300D

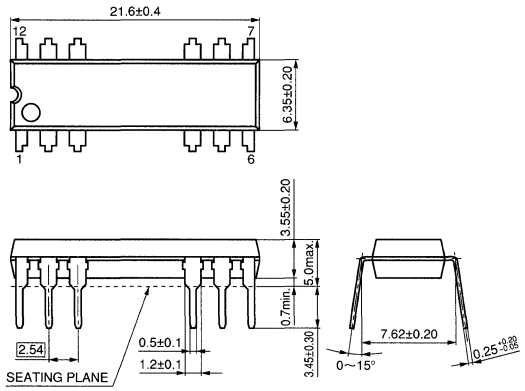

L4 DIP014-P-0300A

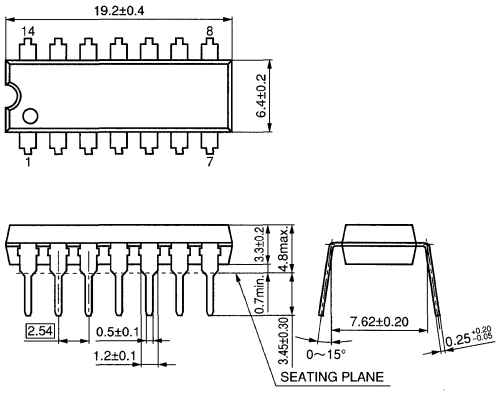

L5 DIP014-P-0300B

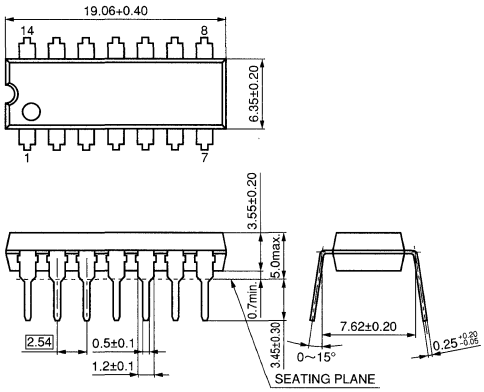

L6 HDIP014-P-0300F

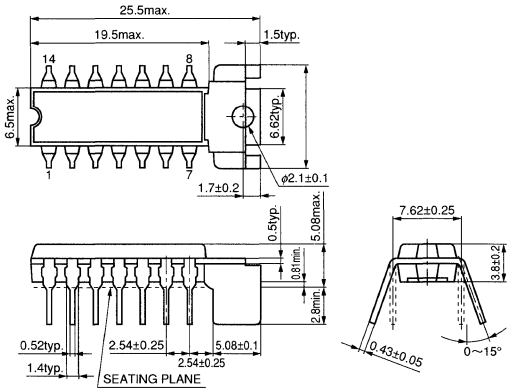

L7 DIP016-P-0300A

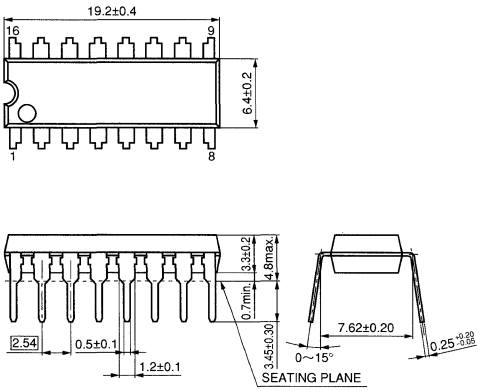

L8 DIP016-P-0300

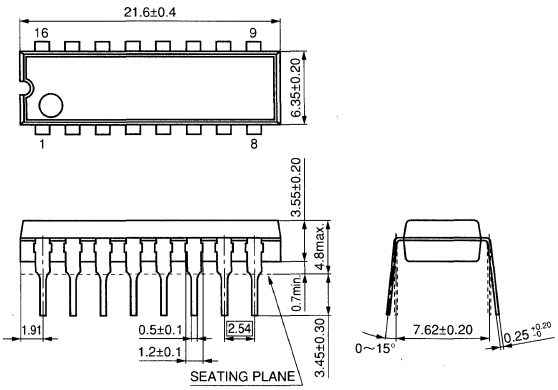

(Package Symbol) DIP = Dual-In-Line Package, HDIP = Heat-sink Dual-In-Line Plastic Package

Refer to current product specifications from us or from offices of Matsushita Electric Industrial Co., Ltd. before using those products.

● DIL Packages (continued)

Unit: mm

L9 DIP016-P-0300C

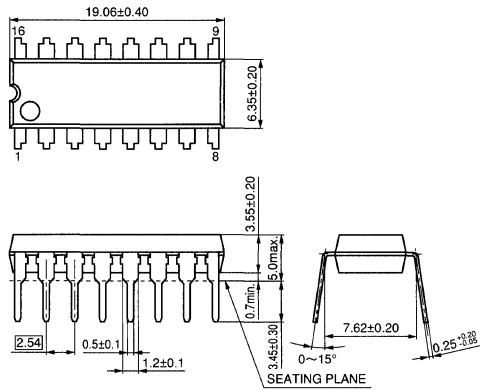

L10 DIP018-P-0300A

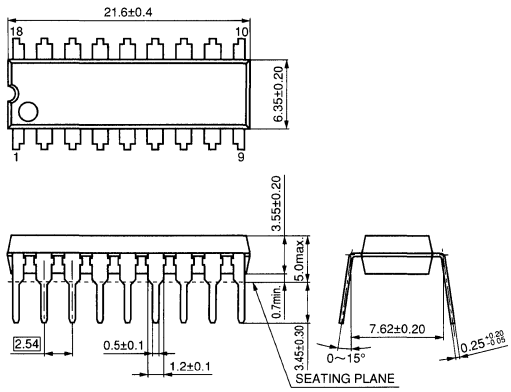

L11 DIP018-P-0300C

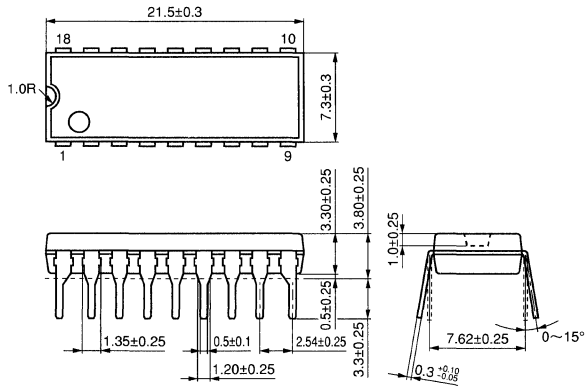

L12 DIP020-P-0300B

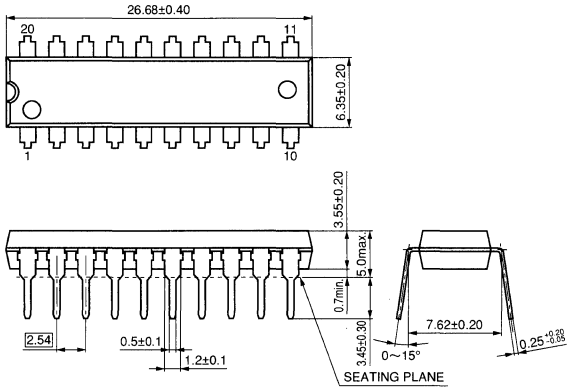

L13 DIP022-P-0400

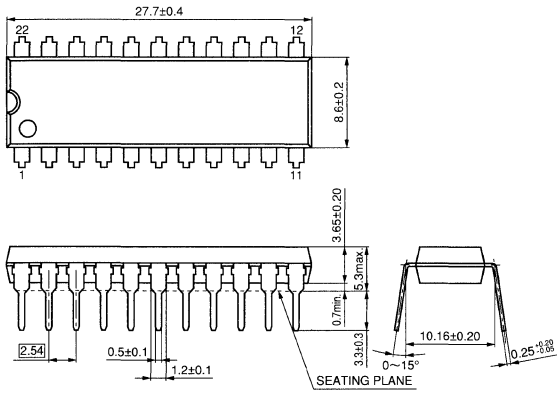

L14 DIP024-P-0600

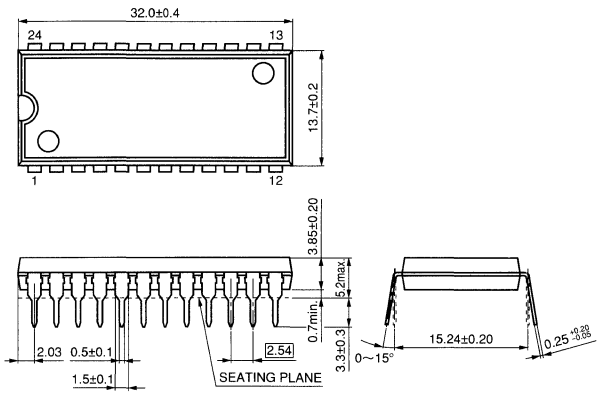

L15 DIP028-P-0600

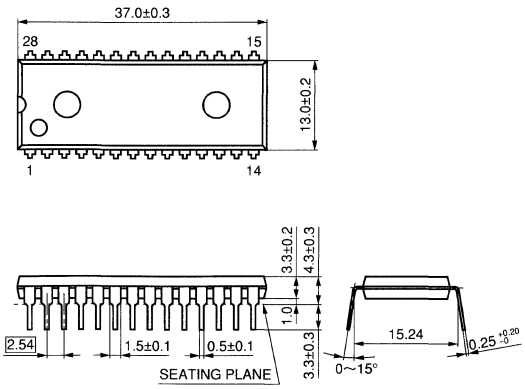

L16 DIP040-P-0600

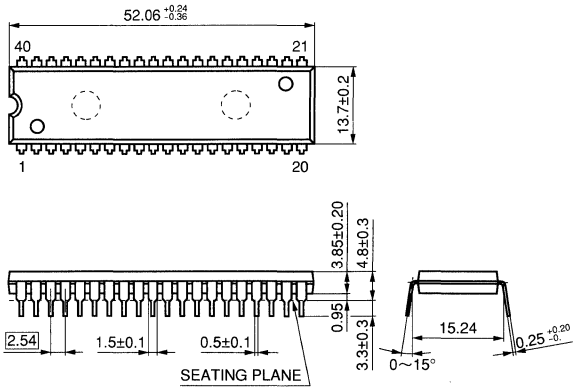

(Package Symbol) DIP = Dual-In-Line Package

Refer to current product specifications from us or from offices of Matsushita Electric Industrial Co., Ltd. before using those products.

Package Outlines (MOS LSI)

● DIL Packages (continued)

Unit: mm

L17 DIP042-P-0600

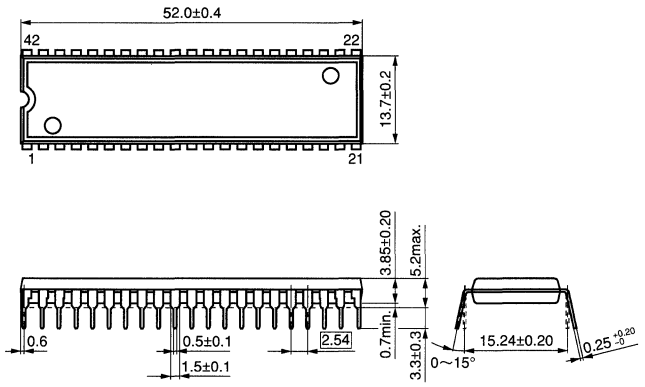

L18 SDIP018-P-0300

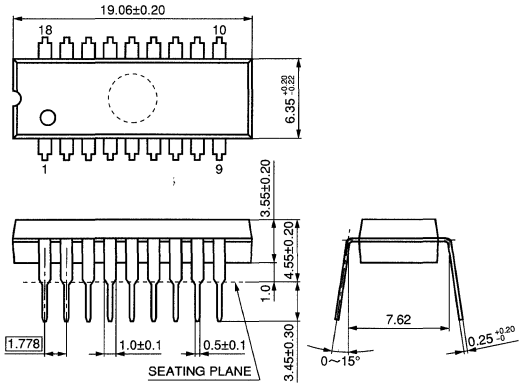

L19 SDIP022-P-0300

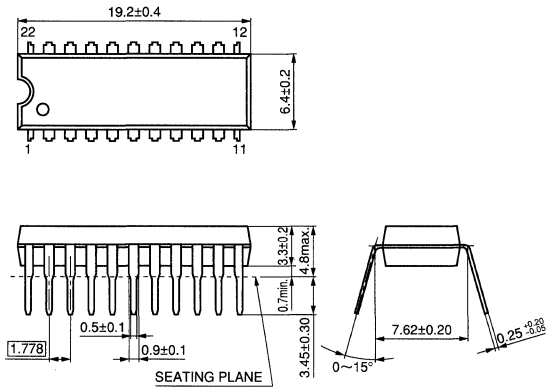

L20 SDIP028-P-0400

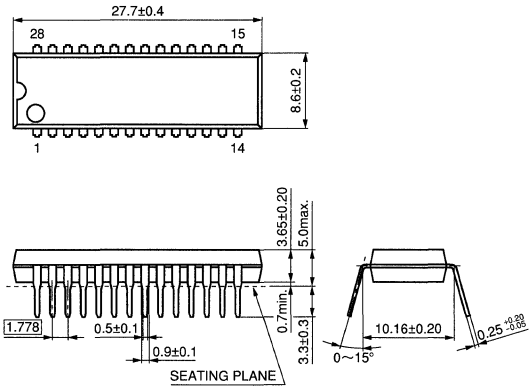

L21 SDIP040-P-0600

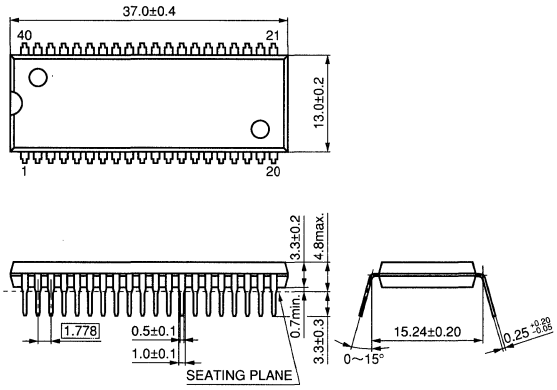

L22 SDIP042-P-0600

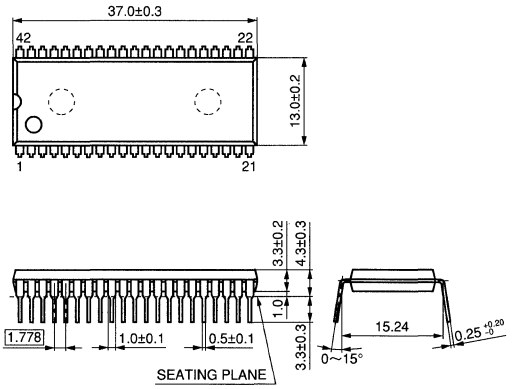

L23 SDIP052-P-0600

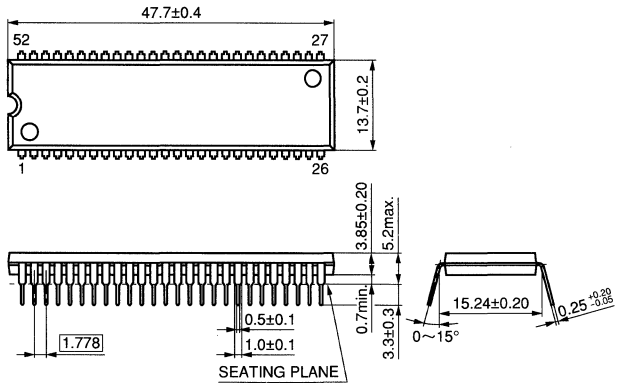

L24 SDIP064-P-0750

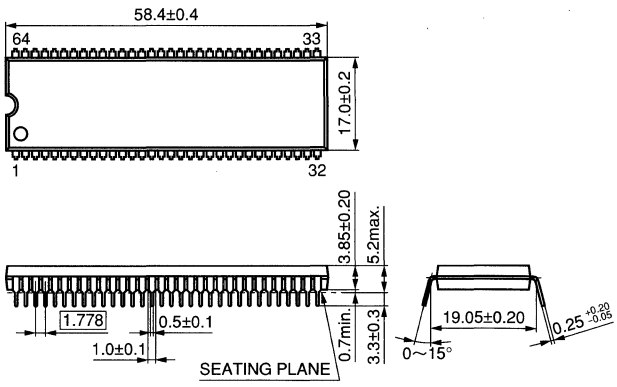

(Package Symbol) DIP = Dual-In-Line Package, SDIP = Shrunk Dual-In-Line Package

Refer to current product specifications from us or from offices of Matsushita Electric Industrial Co., Ltd. before using those products.

● DIL Packages (continued)

L25 DIP040-C-0600A

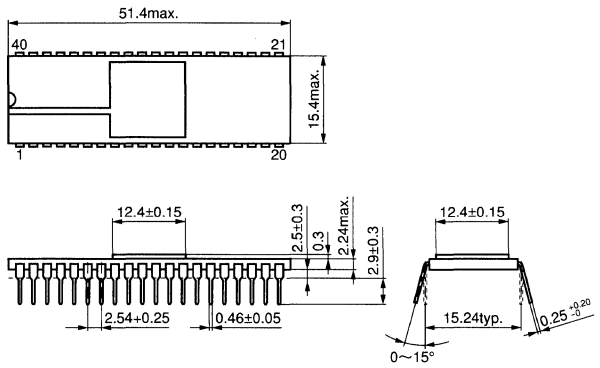

● M Type Package

Unit: mm

L26 M3

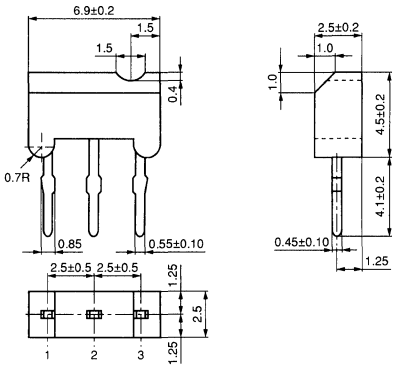

● Mini Type Package

L27 Mini 3

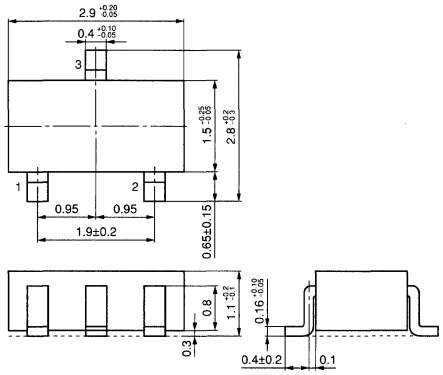

● TO-92 Package

Unit: mm

L28 TO-92

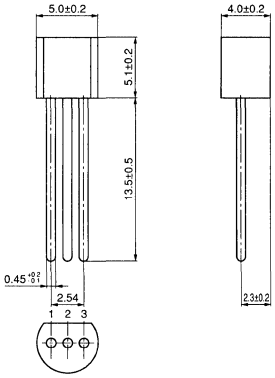

● SOP Packages

Unit: mm

L29 SOP008-P-0225

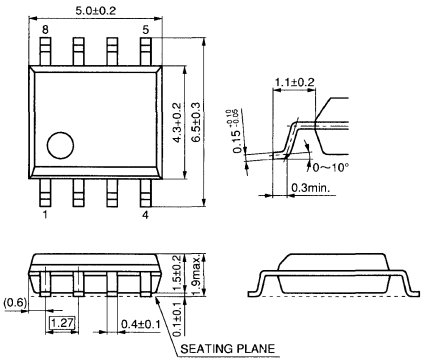

L30 SOP010-P-0225

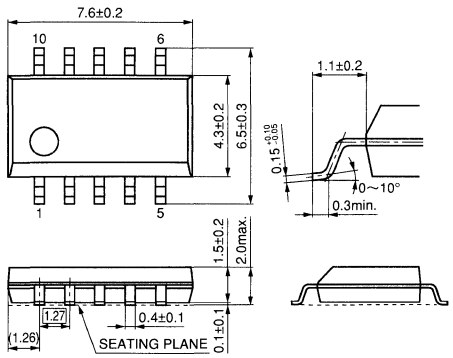

L31 SOP014-P-0225

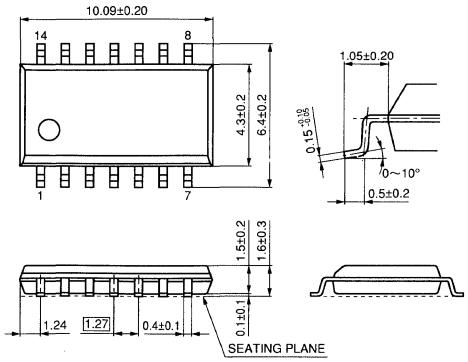

L32 SOP016-P-0225

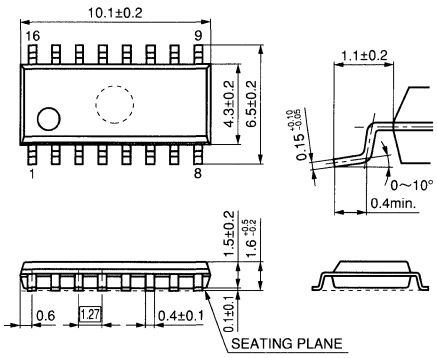

(Package Symbol) DIP = Dual-In-Line Package, SOP = Small Outline Package

Refer to current product specifications from us or from offices of Matsushita Electric Industrial Co., Ltd. before using those products.

Package Outlines (MOS LSI)

● SOP Packages (continued)

Unit: mm

L33 SSOP016-P-0225

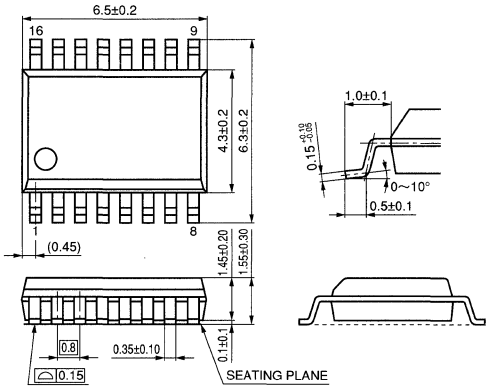

L34 SOP018-P-0300

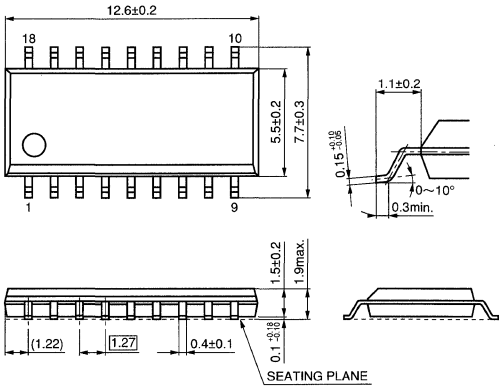

L35 SOP020-P-0300

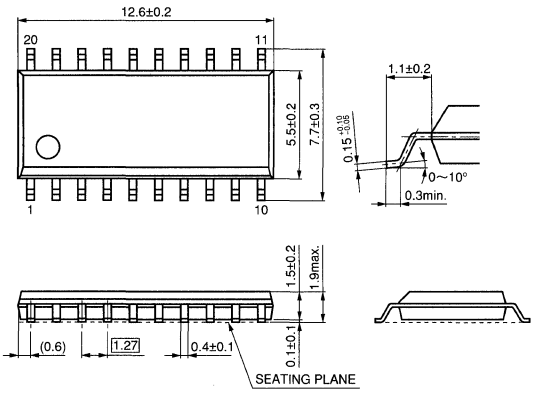

L36 SSOP020-P-0225

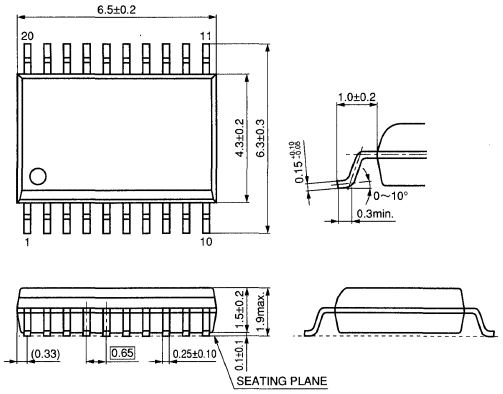

L37 SOP022-P-0375

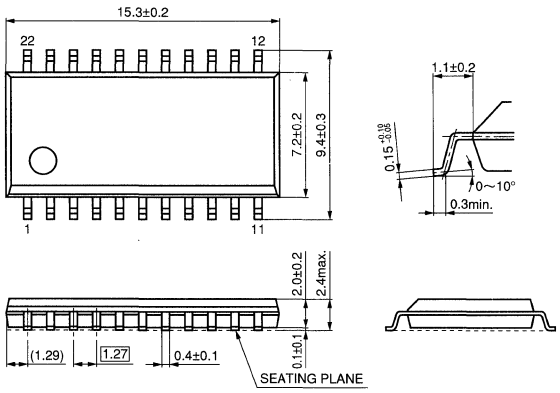

L38 SOP024-P-0375

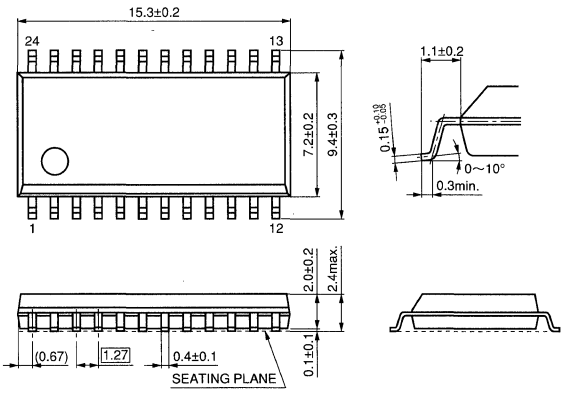

L39 SSOP024-P-0300

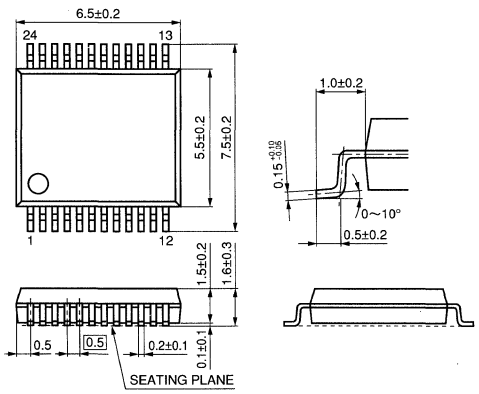

L40 SOP028-P-0375

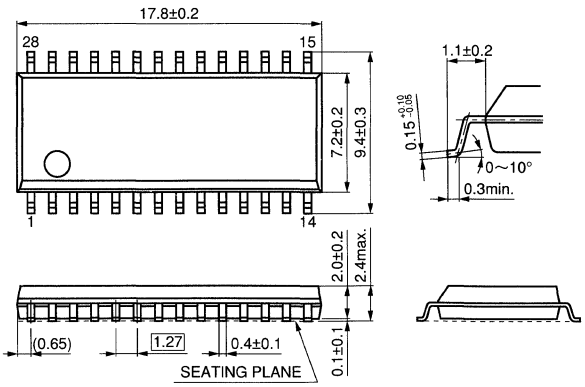

(Package Symbol) SOP = Small Outline Package, SSOP = Shrunk Small Outline Package

Refer to current product specifications from us or from offices of Matsushita Electric Industrial Co., Ltd. before using those products.

● SOP Packages (continued)

Unit: mm

L41 SSOP028-P-0375B

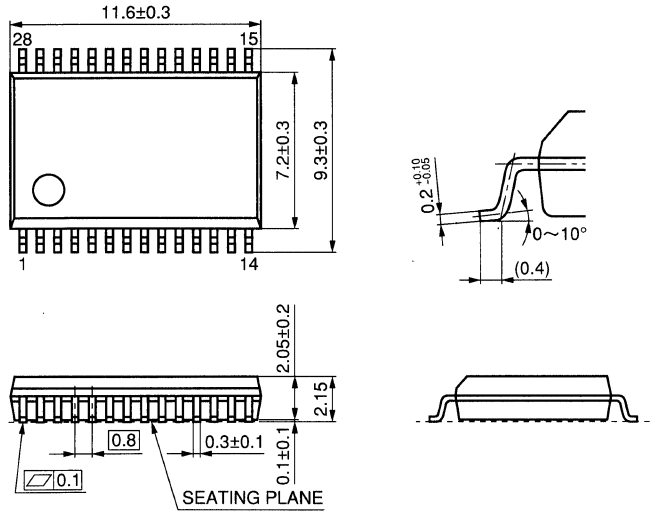

L42 SSOP042-P-0450

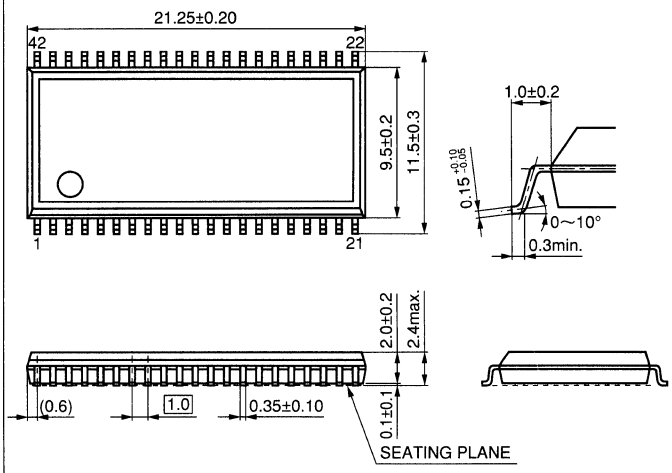

L43 SOP020-P-0300C

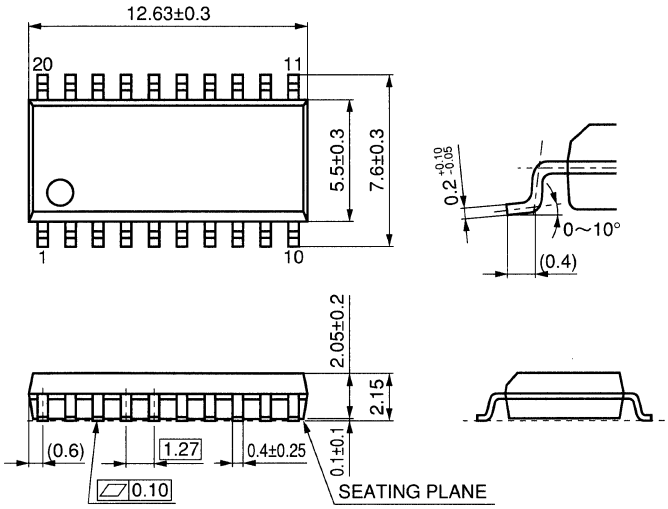

● QFP Packages

Unit: mm

L44 QFH032-P-0707

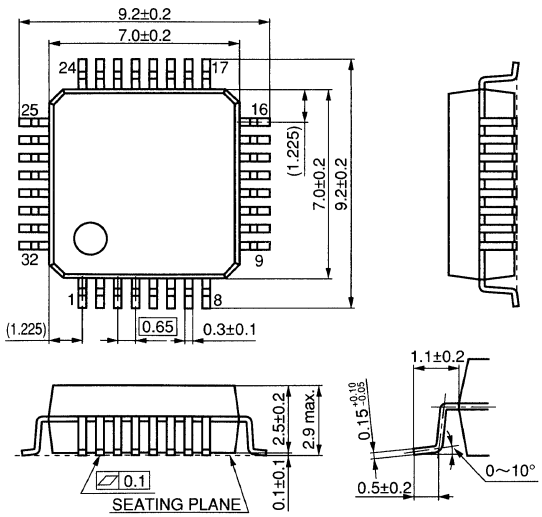

L45 TQFP032-P-0707

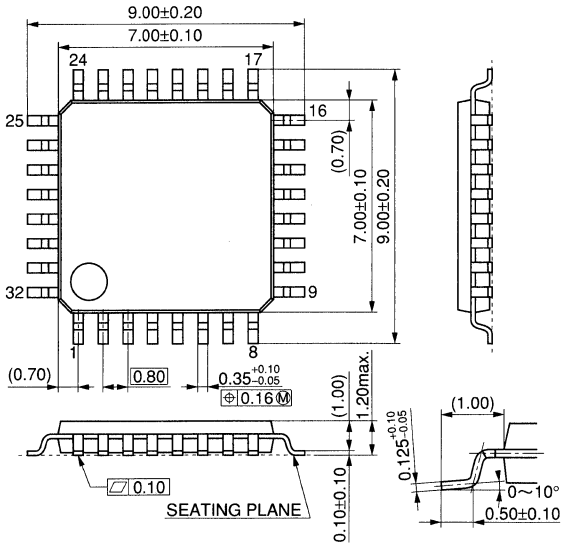

(Package Symbol) QFH = Quad Flat High Package, SOP = Small Outline Package (PANAFLAT PACKAGE), SSOP = Shrunk Small Outline Package, TQFP = Thin Quad Flat Package

Refer to current product specifications from us or from offices of Matsushita Electric Industrial Co., Ltd. before using those products.

Package Outlines (MOS LSI)

● QFP Packages (continued)

Unit: mm

L46 QFP040-P-1010

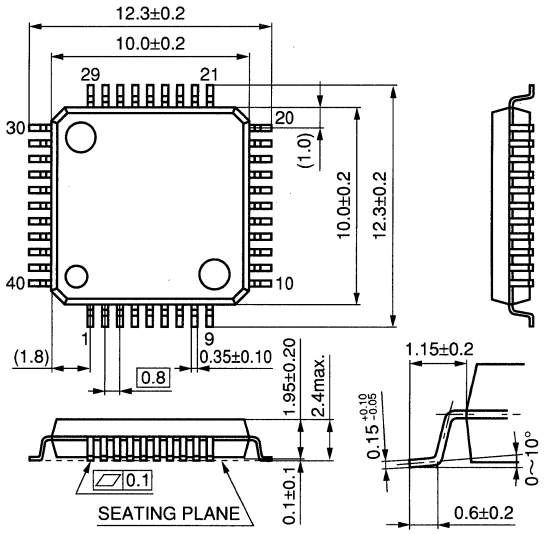

L47 QFP042-P-1414A

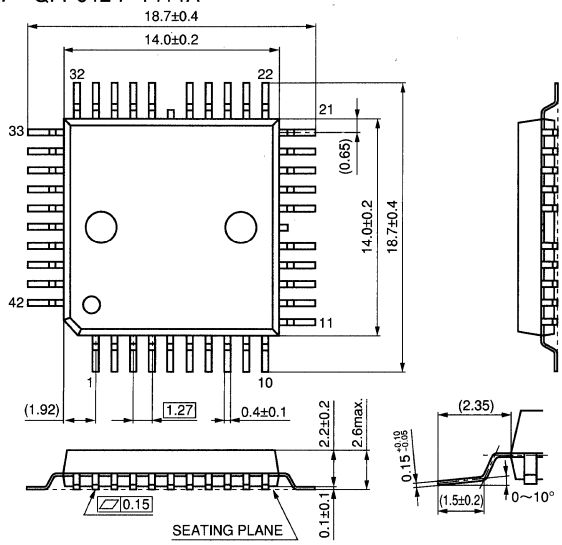

L48 QFP042-P-1414

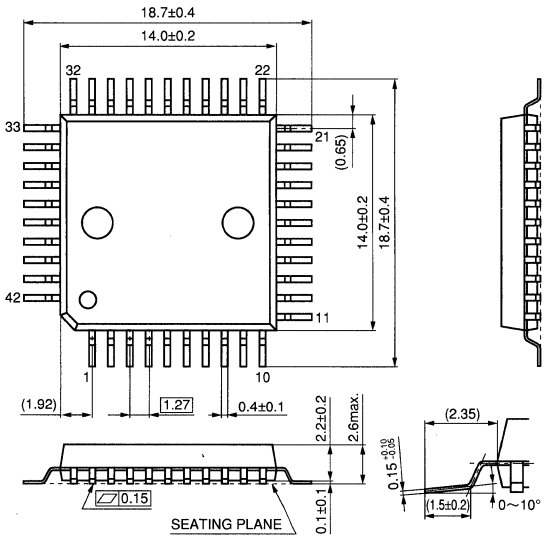

L49 QFP044-P-1010

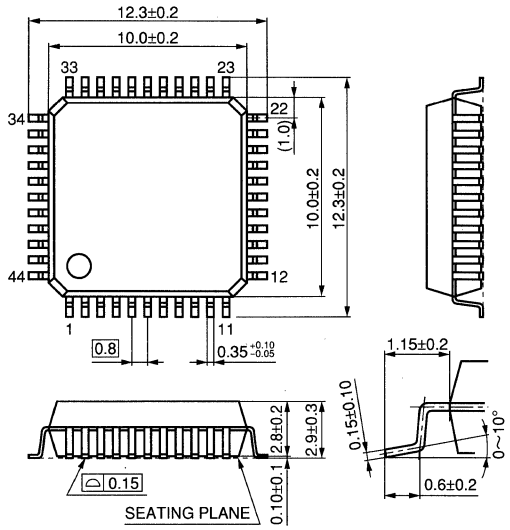

L50 QFP044-P-1010

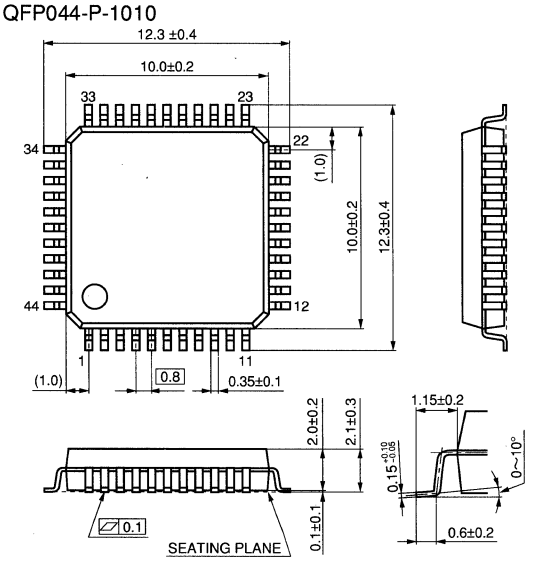

L51 QFH048-P-0707

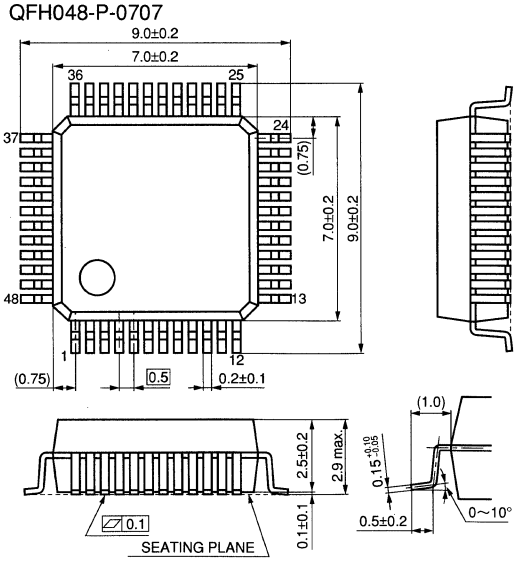

(Package Symbol) QFH = Quad Flat High Package, QFP = Quad Flat Package

Refer to current product specifications from us or from offices of Matsushita Electric Industrial Co., Ltd. before using those products.

● QFP Packages (continued)

Unit: mm

L52 QFP048-P-1212A

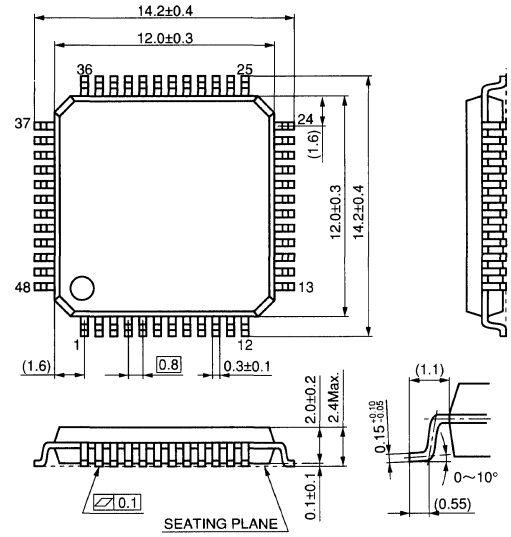

L53 TQFP048-P-0707

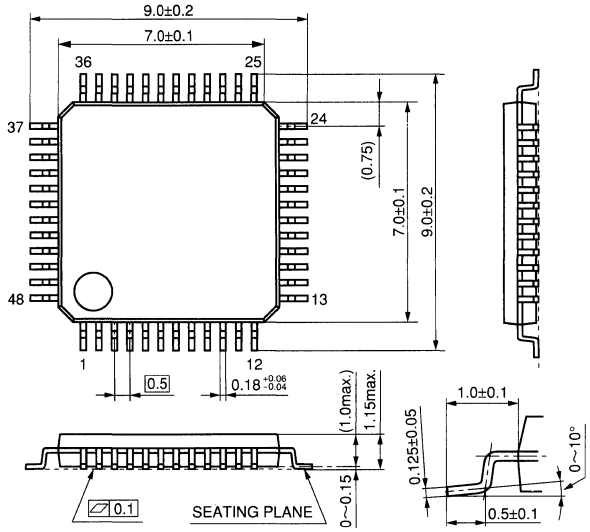

L54 QFH064-P-1010

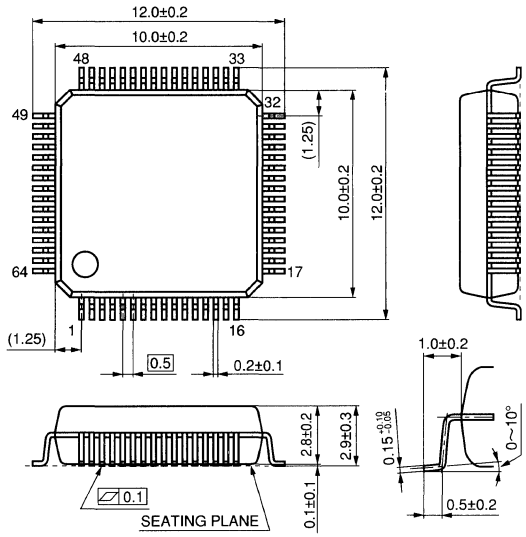

L55 QFH064-P-1212

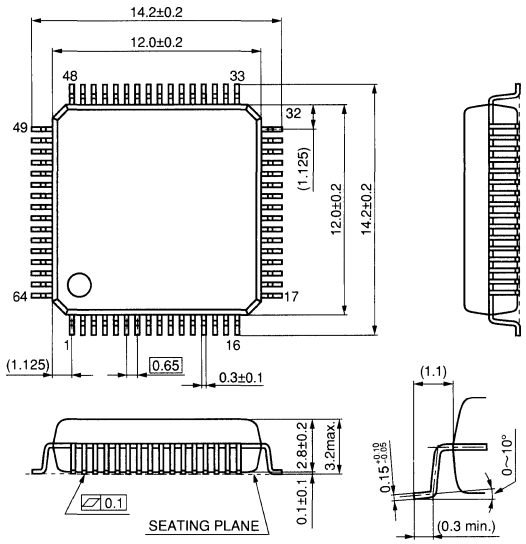

L56 QFH064-P-1414B

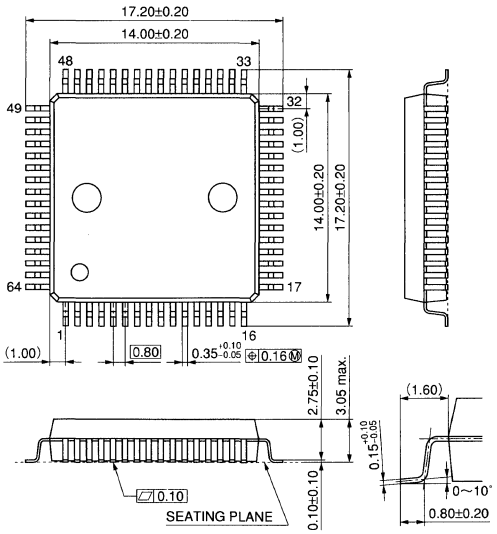

L57 QFI064-P-0530

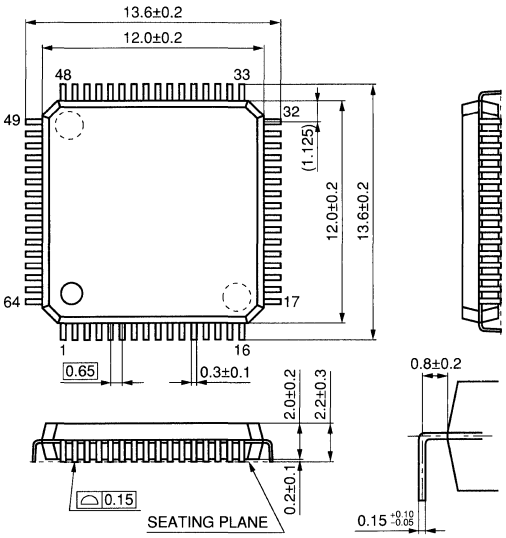

(Package Symbol) QFH = Quad Flat High Package, QFI = Quad Flat I-Leaded Package, QFP = Quad Flat Package, TQFP = Thin Quad Flat Package

Refer to current product specifications from us or from offices of Matsushita Electric Industrial Co., Ltd. before using those products.

● QFP Packages (continued)

Unit: mm

L58 QFP064-P-1818

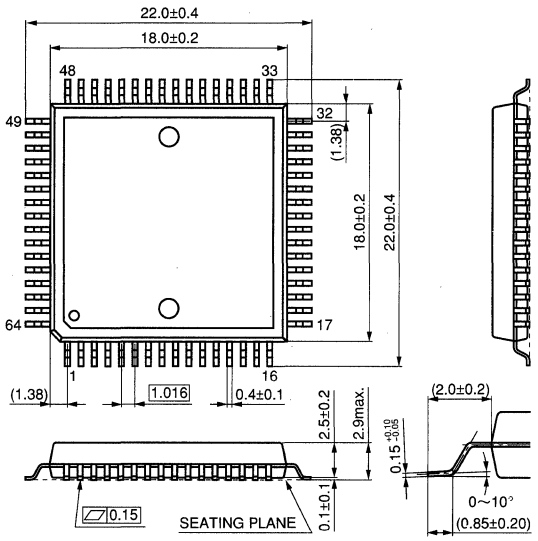

L59 QFP064-P-1212

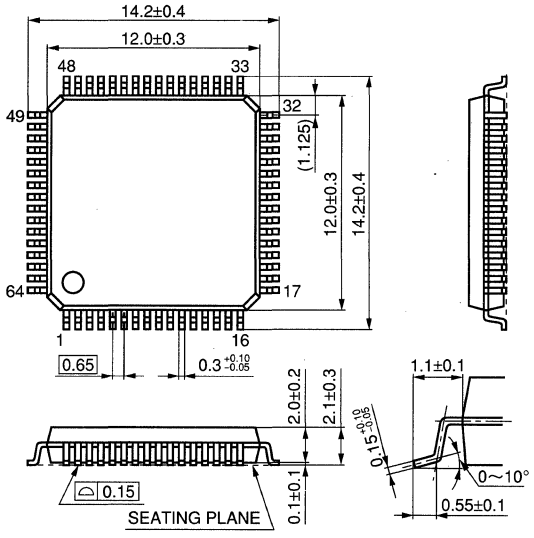

L60 QFP064-P-1414

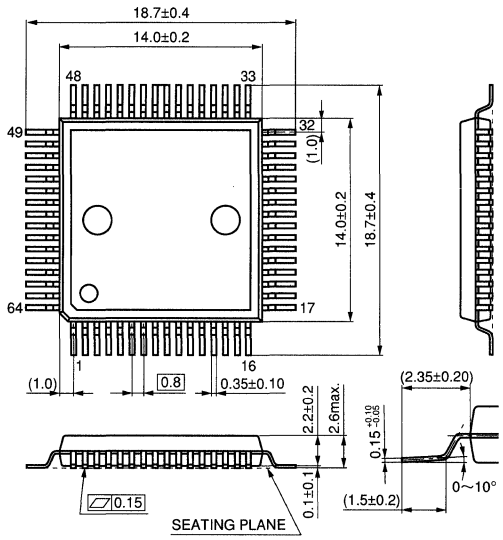

L61 TQFP064-P-1010

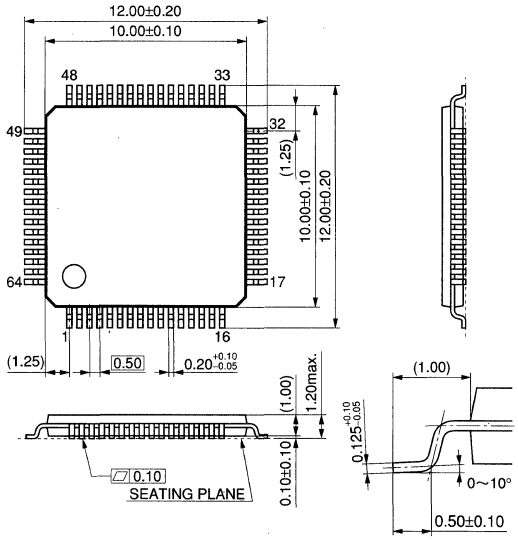

L62 TQFI064-P-0450

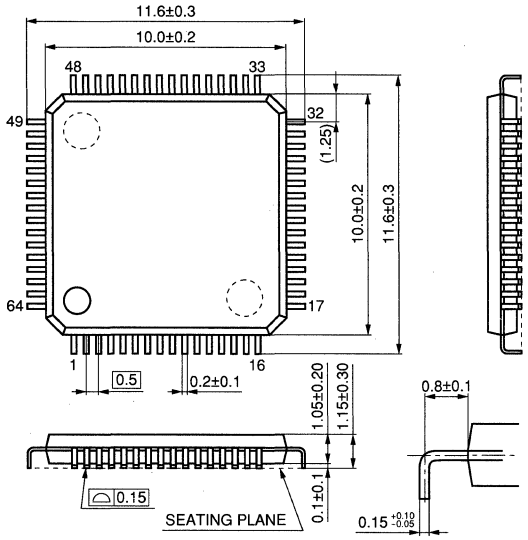

L63 QFH080-P-1212

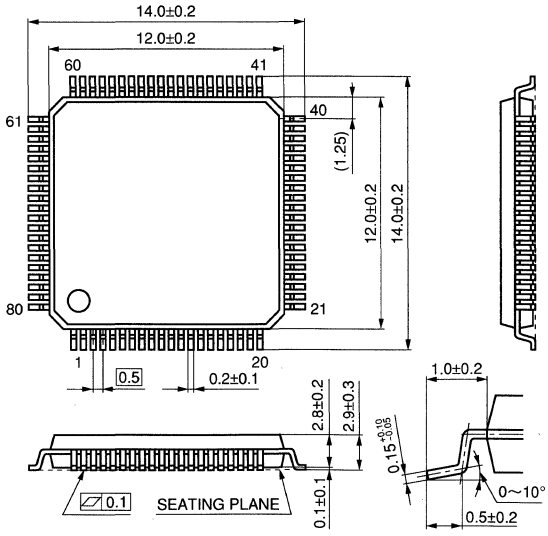

(Package Symbol) QFH = Quad Flat High Package, QFP = Quad Flat Package, TQFI = Thin Quad Flat I-Leaded Package, TQFP = Thin Quad Flat Package, QFP = Quad Flat Package

Refer to current product specifications from us or from offices of Matsushita Electric Industrial Co., Ltd. before using those products.

● QFP Packages (continued)

Unit: mm

L64 QFH080-P-1414

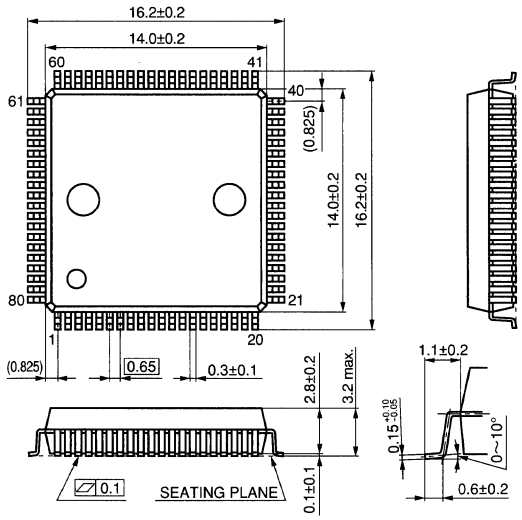

L65 QFH080-P-1420

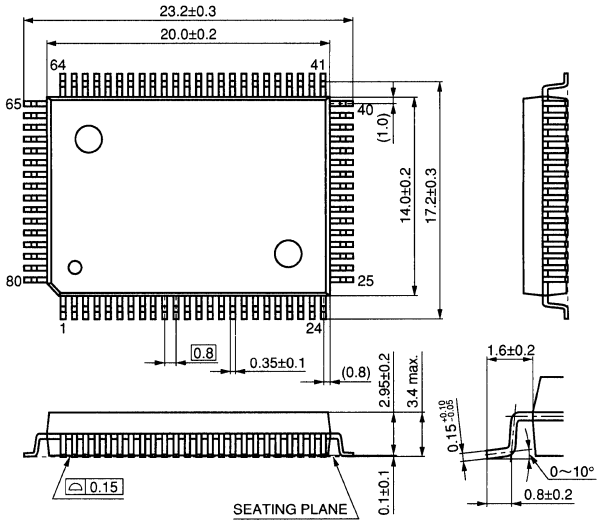

L66 TQFP080-P-1212

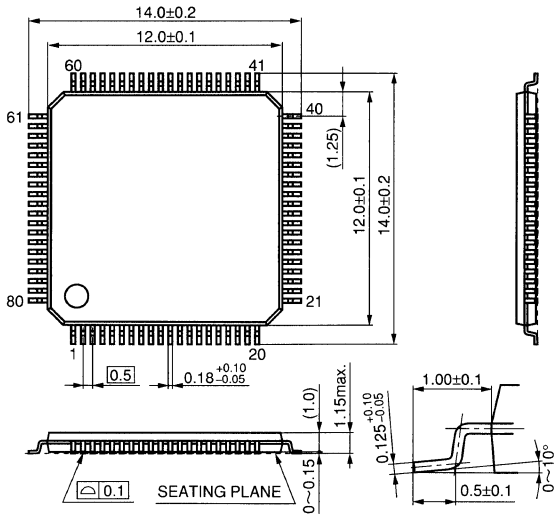

L67 TQFI080-P-0530

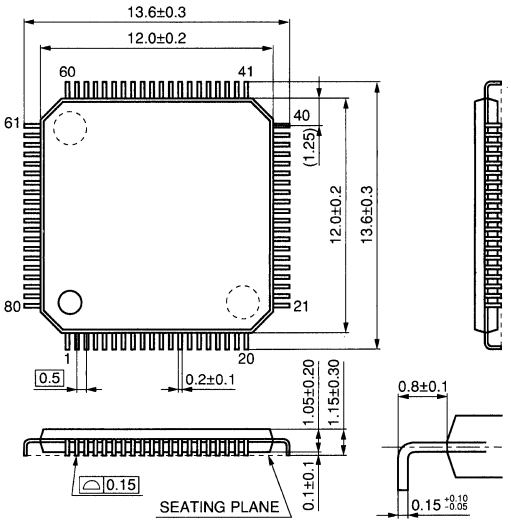

L68 QFS080-P-1414

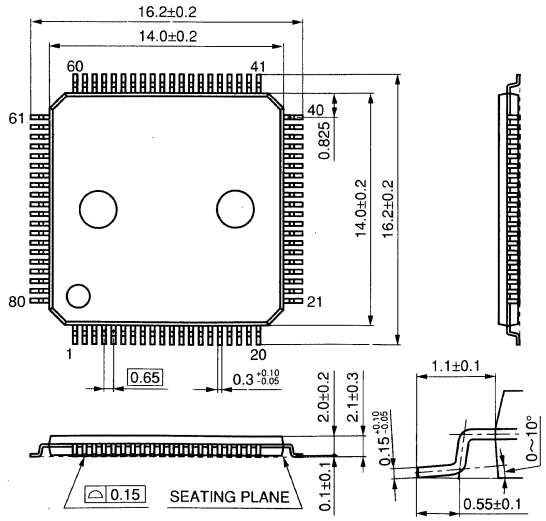

L69 QFH084-P-1212

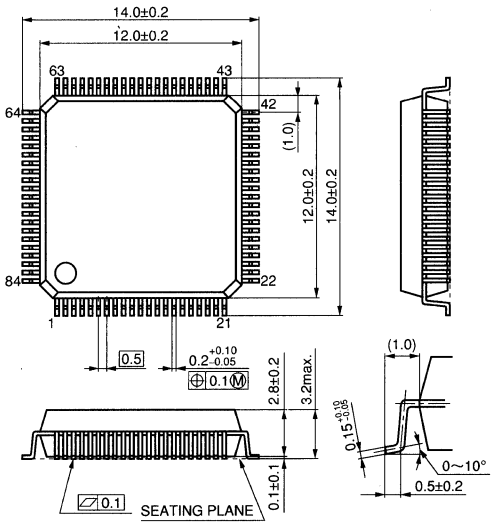

(Package Symbol) QFH = Quad Flat High Package, QFS = Quad Flat Small Package, TQFI = Thin Quad Flat I-Leaded Package, TQFP = Thin Quad Flat Package

Refer to current product specifications from us or from offices of Matsushita Electric Industrial Co., Ltd. before using those products.

Package Outlines (MOS LSI)

● QFP Packages (continued)

Unit: mm

L70 QFH084-P-1818

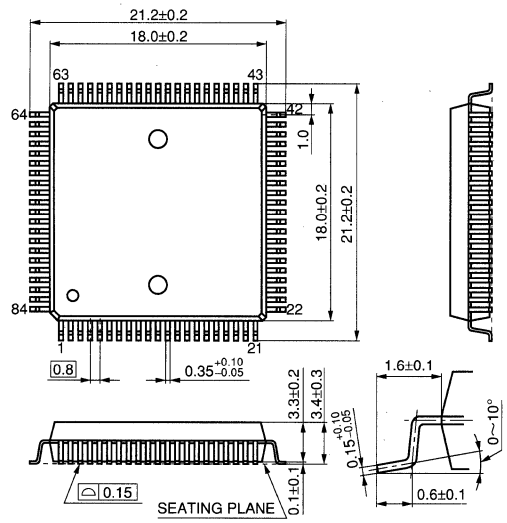

L71 QFJ084-P-S115

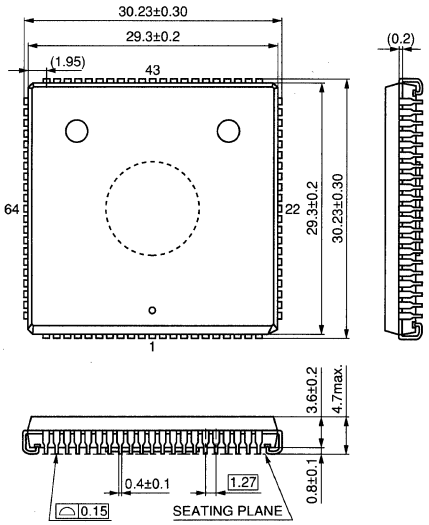

L72 QFP084-P-1818

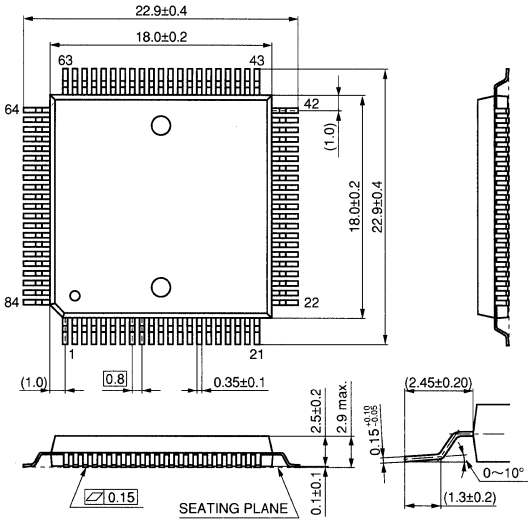

L73 QFP084-P-1818E

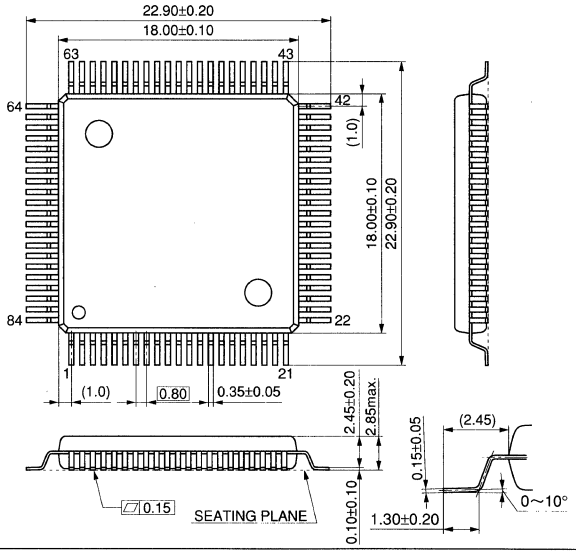

L74 QFP084-P-1818F

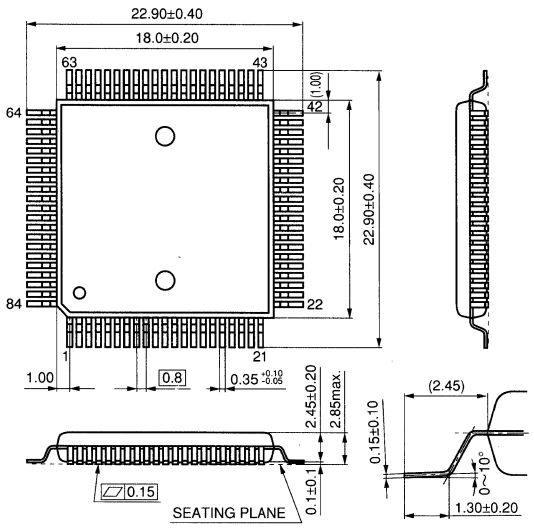

L75 QFH100-P-1414

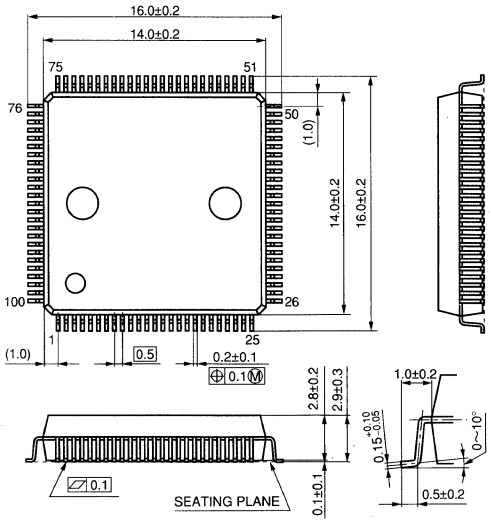

(Package Symbol) QFH = Quad Flat High Package, QFJ = Quad Flat J-Leaded Plastic Package, QFP = Quad Flat Package
Refer to current product specifications from us or from offices of Matsushita Electric Industrial Co., Ltd. before using those products.

● QFP Packages (continued)

Unit: mm

L76 QFP100-P-1818

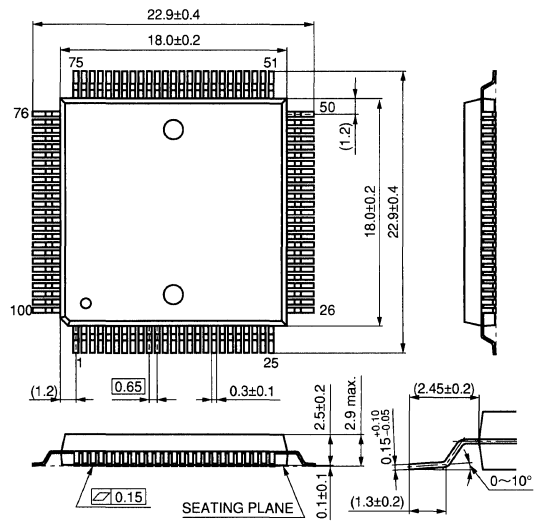

L76a QFP100-P-1818B

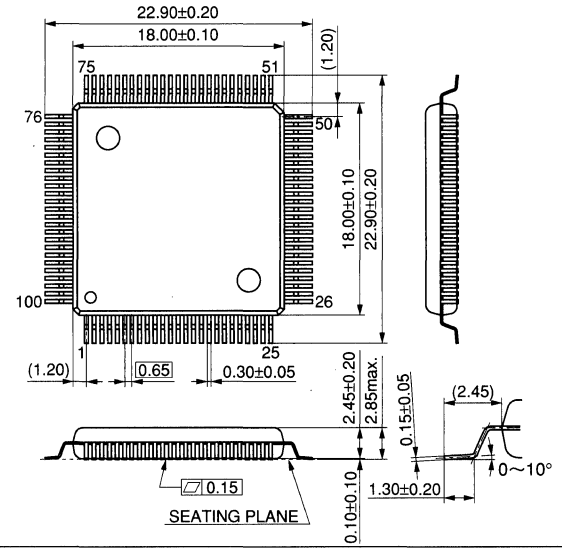

L77 QFH100-P-1420

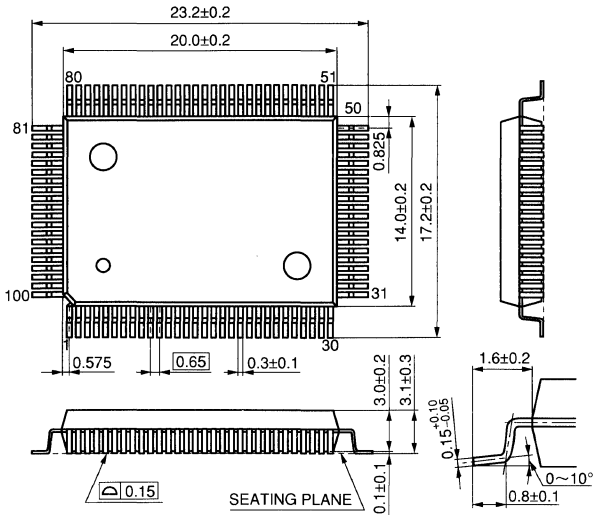

L78 TQFP100-P-1414

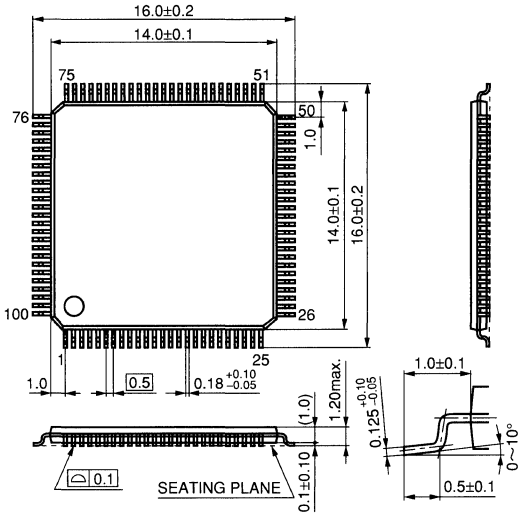

L79 TQFP120-P-1414

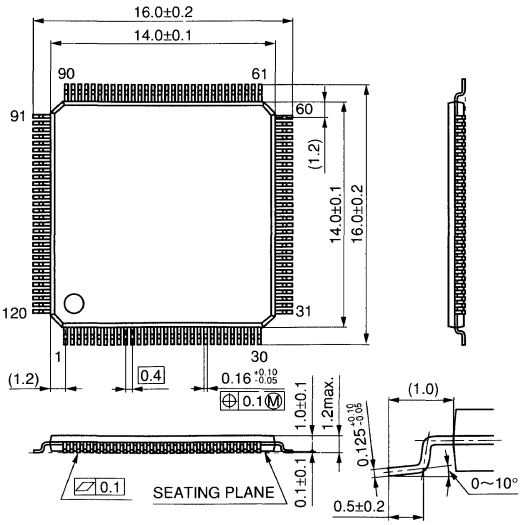

L80 QFP124-P-2828

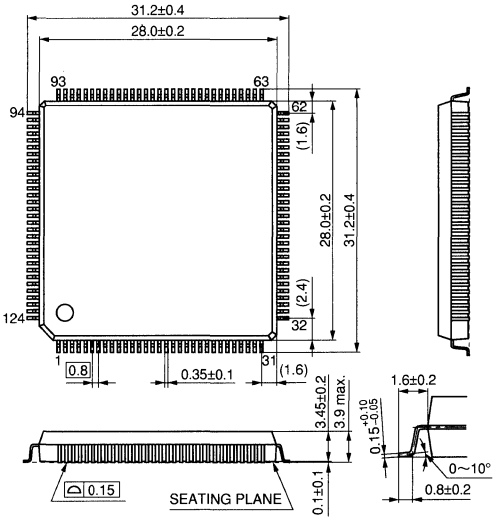

(Package Symbol) QFH = Quad Flat High Package, QFP = Quad Flat Package, TQFP = Thin Quad Flat Package

Refer to current product specifications from us or from offices of Matsushita Electric Industrial Co., Ltd. before using those products.

Package Outlines (MOS LSI)

● QFP Packages (continued)

Unit: mm

L81 LQFP128-P-1818

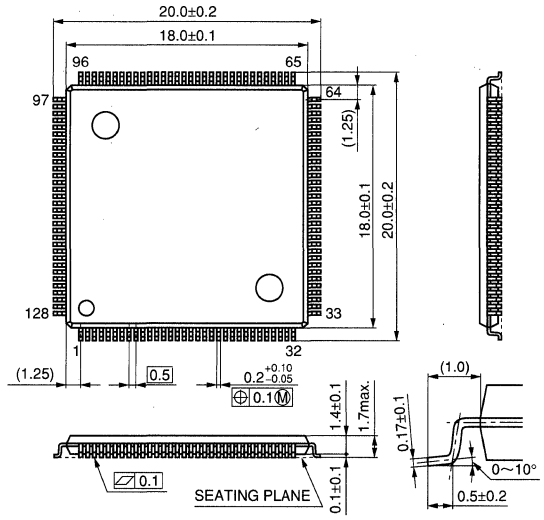

L82 QFP128-P-1818

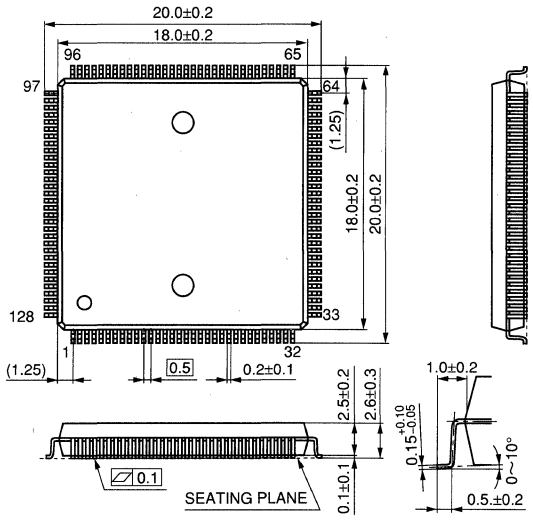

L83 QFH128-P-1818

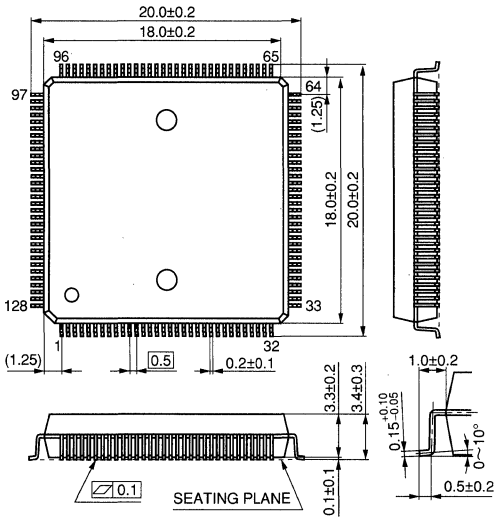

L84 QFP144-P-2020

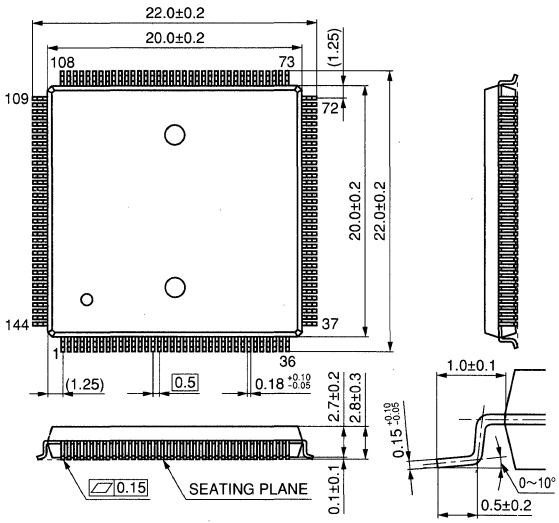

L86 QFP148-P-2828

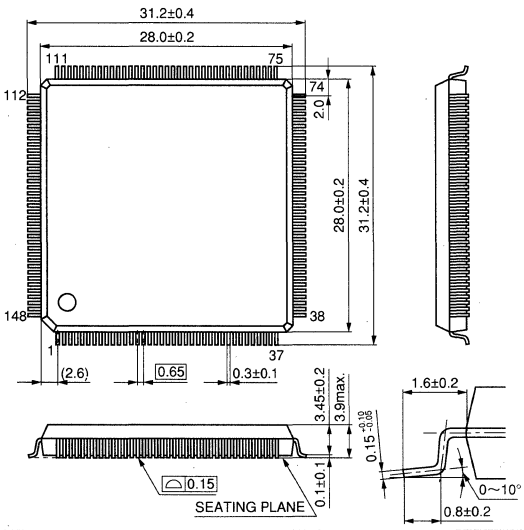

L87 QFP160-P-2828

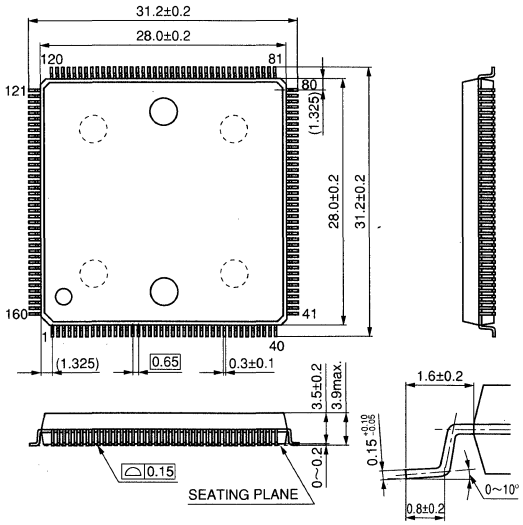

(Package Symbol) LQFP = Low Profile Quad Flat Package, QFH = Quad Flat High Package, QFP = Quad Flat Package
Refer to current product specifications from us or from offices of Matsushita Electric Industrial Co., Ltd. before using those products.

● QFP Packages (continued)

Unit: mm

L90 LQFP164-P-1818

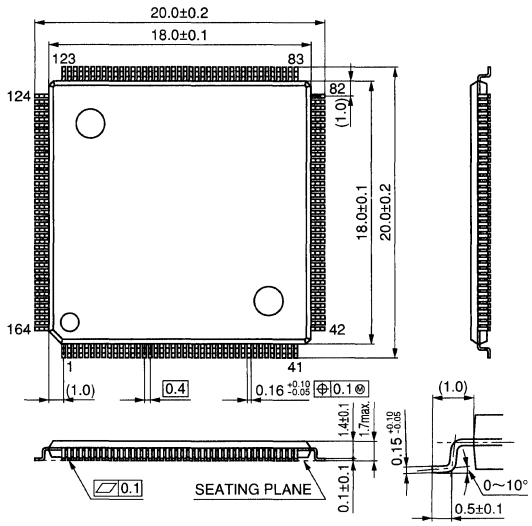

L91 TQFP168-P-1444

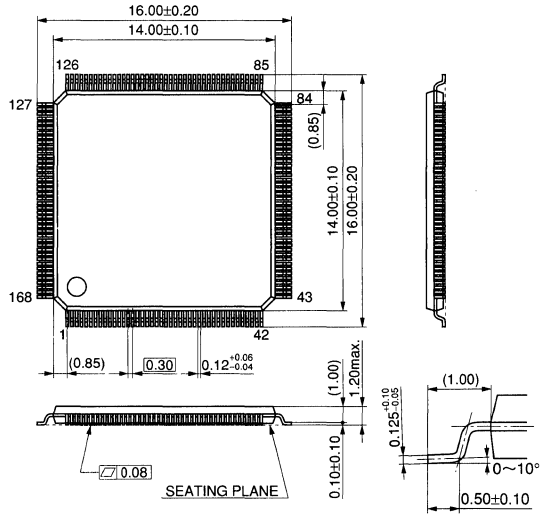

L92 QFP176-P-2424

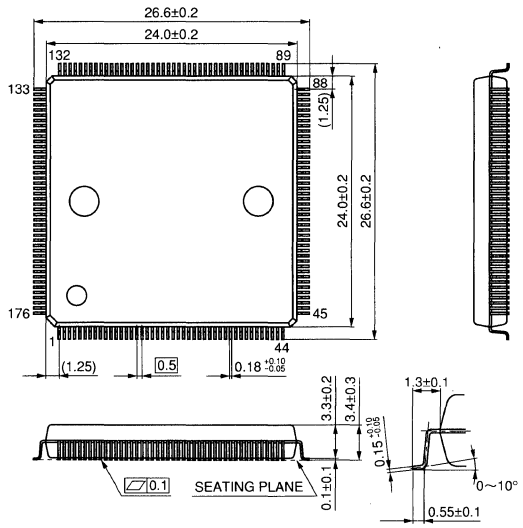

L93 LQFP176-P-2424

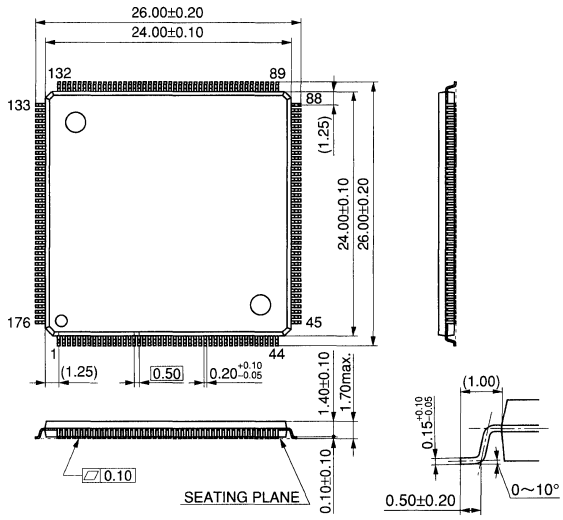

L94 QFP208-P-2828

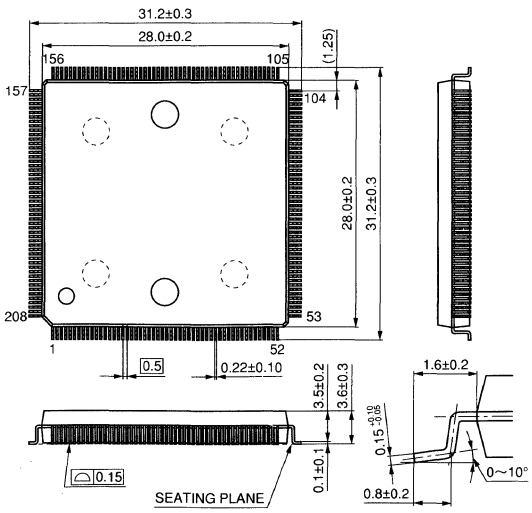

L95 QFP208-P-2828A

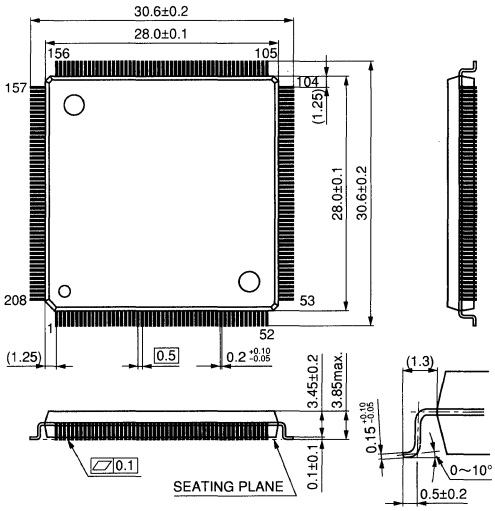

(Package Symbol) LQFP = Low Profile Quad Flat Package, QFP = Quad Flat Package, TQFP = Thin Quad Flat Package

Refer to current product specifications from us or from offices of Matsushita Electric Industrial Co., Ltd. before using those products.

● QFP Packages (continued)

Unit: mm

L96 QFP256-P-2828

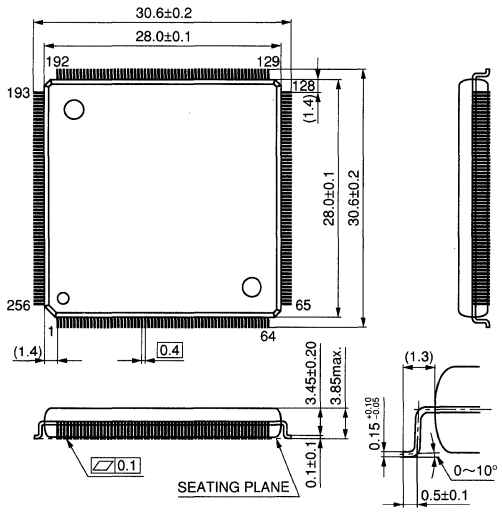

L97 QFP256-P-2840

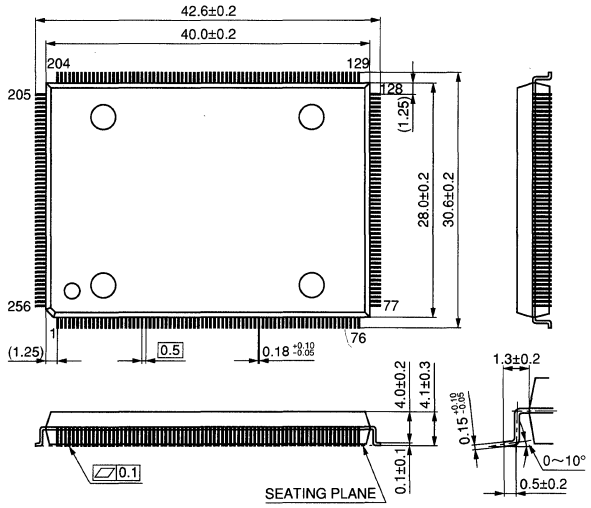

L98 QFP304-P-4040

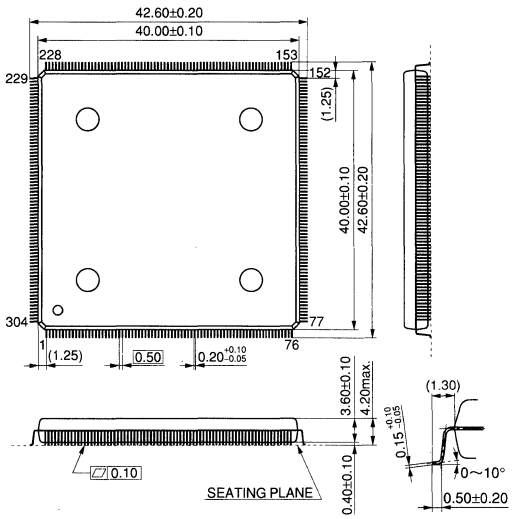

(Package Symbol) QFP = Quad Flat Package

Refer to current product specifications from us or from offices of Matsushita Electric Industrial Co., Ltd. before using those products.

● PGA Packages

Unit: mm

L100 PGA100-C-S13U

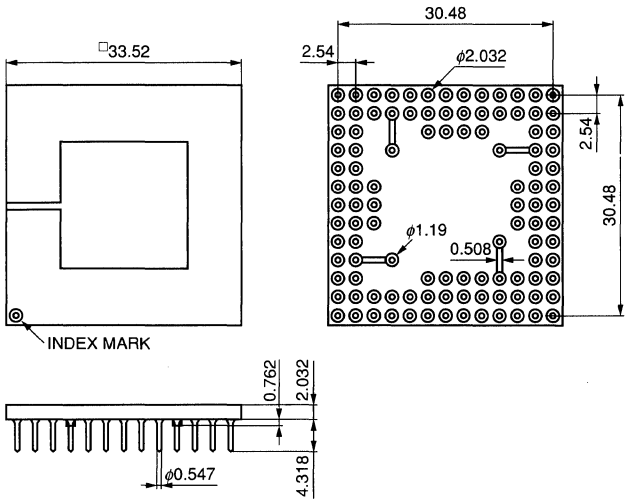

L103 PGA144-C-S15U

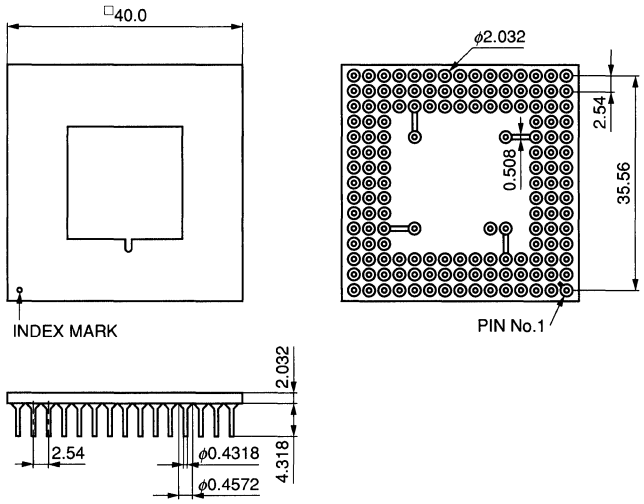

L105 PGA181-C-S15U

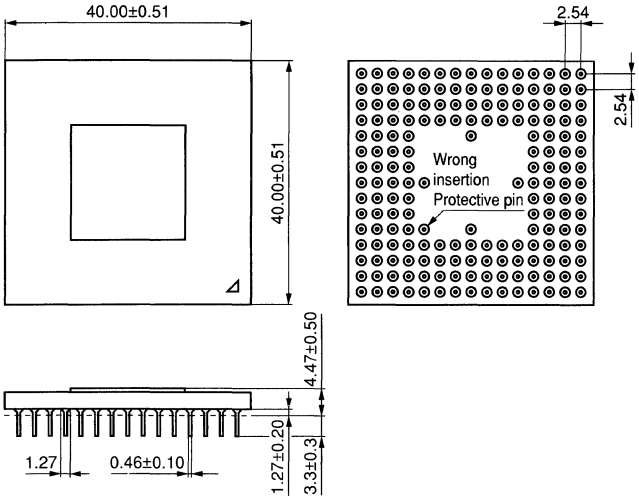

L106 PGA225-C-S17U

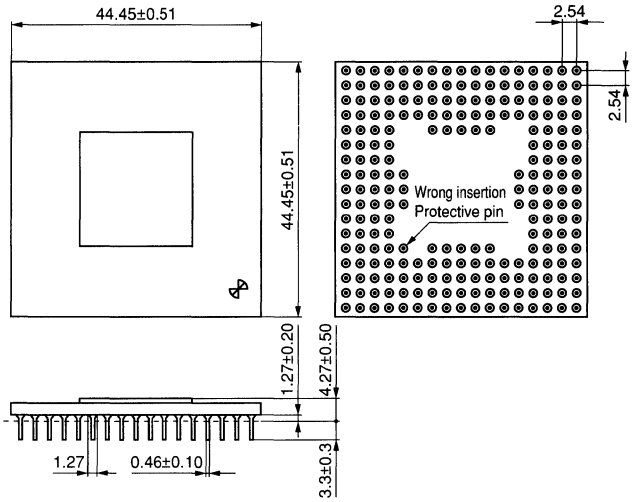

L107 PGA281-C-S19U

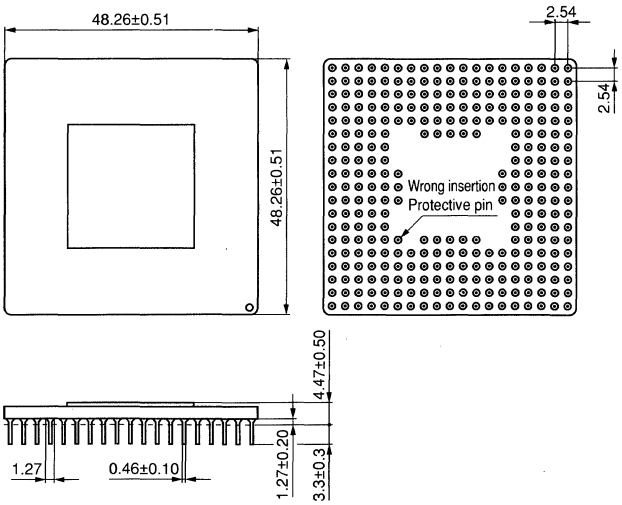

(Package Symbol) PGA = Pin Grid Array

Refer to current product specifications from us or from offices of Matsushita Electric Industrial Co., Ltd. before using those products.

Package Outlines (MOS Memories)

● SIP / ZIP Packages

Unit: mm

M1 SIP009-P-0000

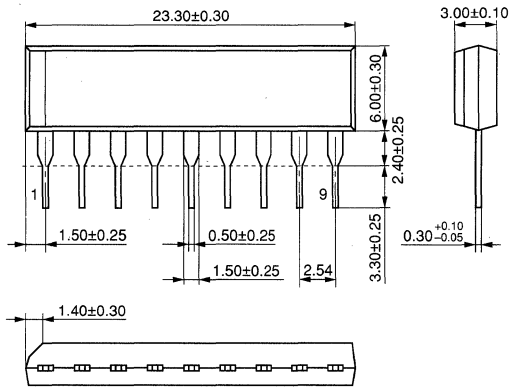

M2 ZIP020-P-0400

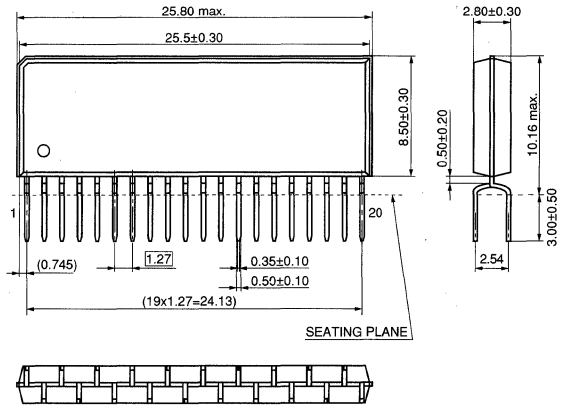

● DIP Packages

Unit: mm

M3 DIP008-P-0300A

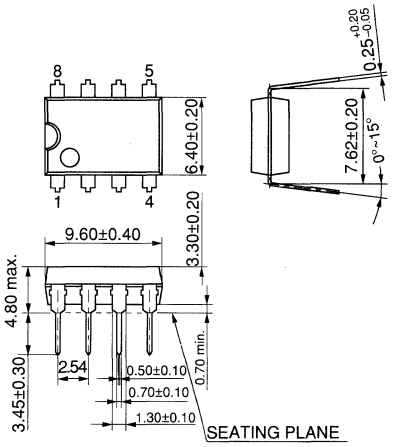

M4 DIP014-P-0300A

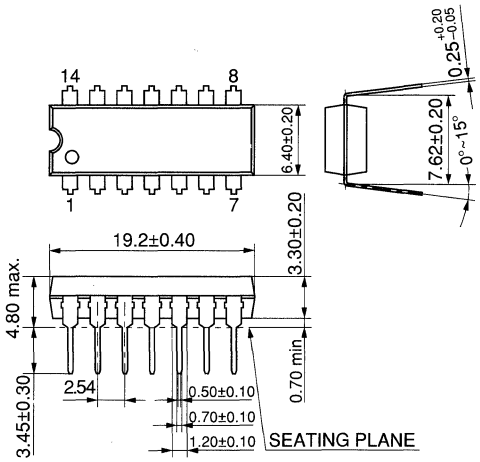

M5 DIP016-P-0300A

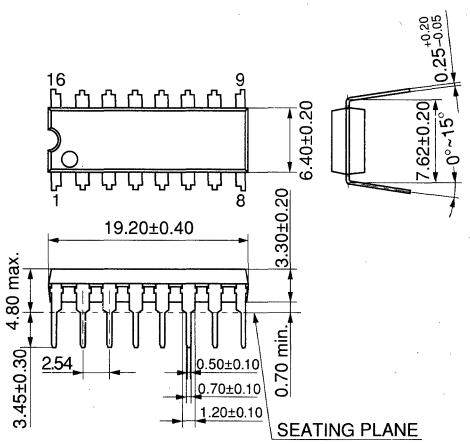

M6 DIP018-P-0300C

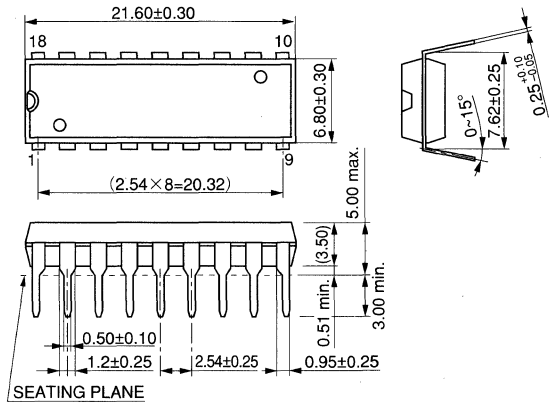

(Package Symbol) DIP = Dual-In-line Package, SIP = Single-In-line Package, ZIP = Zigzag In-line Package
The dimesion in parenthesis is reference value

● DIP Packages (continued)

Unit: mm

M7 DIP040-P-0600

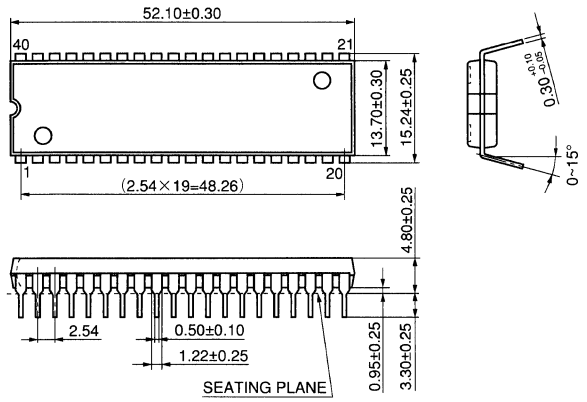

M8 SDIP040-P-0600A

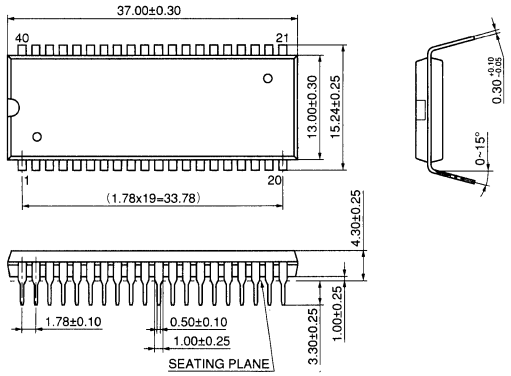

● QFP/TQFP Packages

Unit: mm

M9 QFP064-P-1818

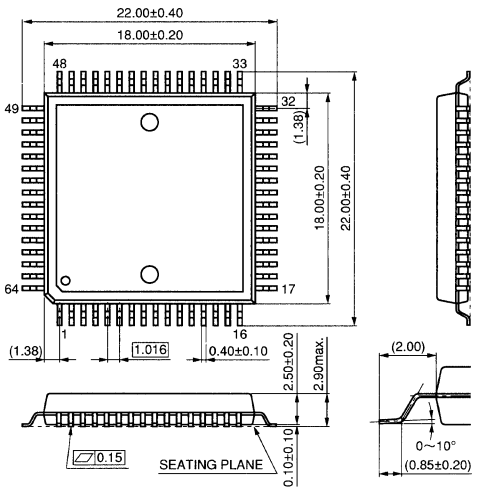

M10 TQFP100-P-1414B

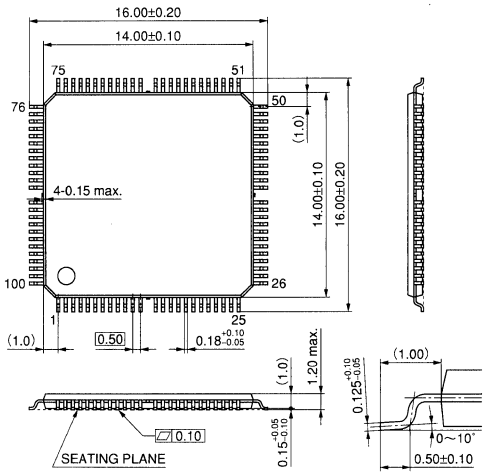

M11 TQFP100-P-1414D

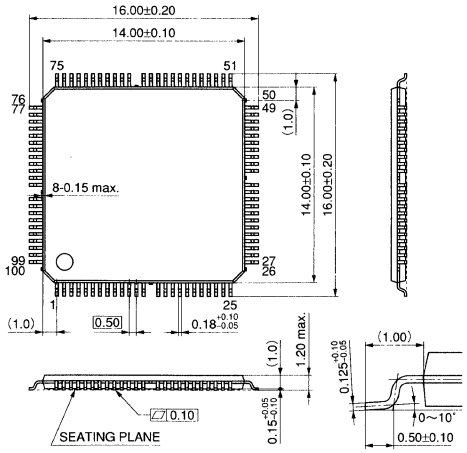

(Package Symbol) DIP = Dual-In-line Package, QFP = Quad Flat Package, SDIP = Shrunk Dual-In-line Package, TQFP = Thin Quad Flat Package

The dimesion in parenthesis is reference value

Package Outlines (MOS Memories)

● SOJ Packages

Unit: mm

M12 SOJ026-P-0300A

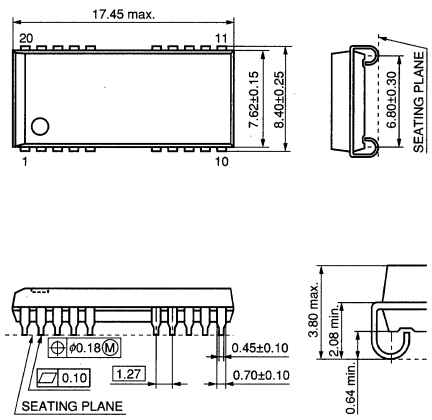

M13 SOJ026-P-0300B

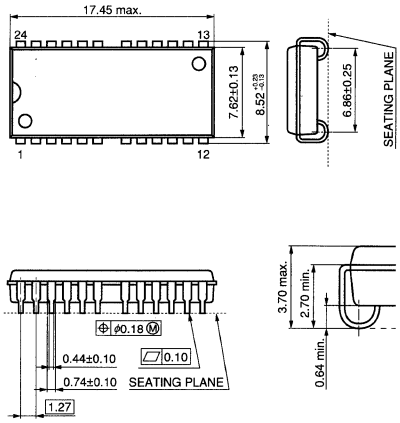

M14 SOJ028-P-0400

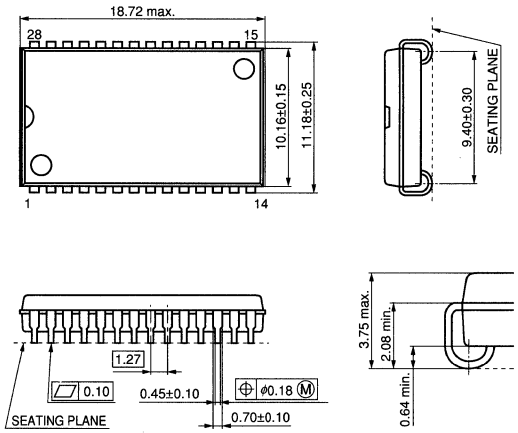

M15 SOJ028-P-0400B

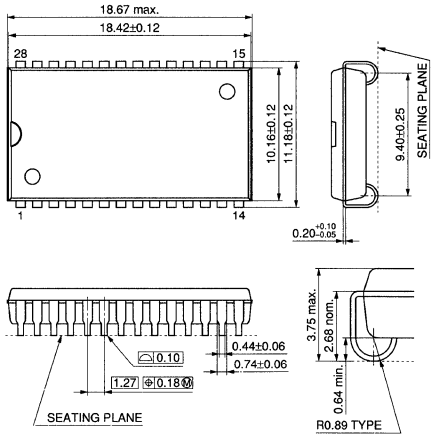

M16 SOJ040-P-0400

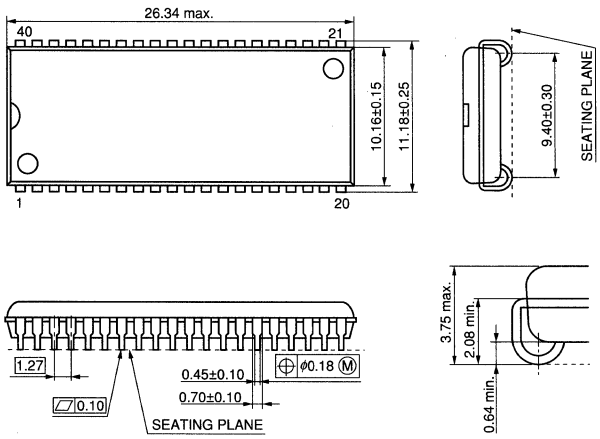

M17 SOJ042-P-0400

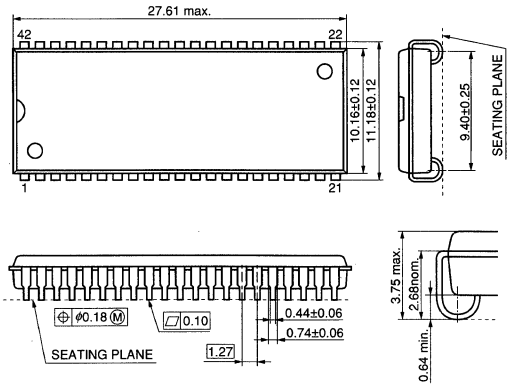

(Package Symbol) SOJ = S mall O utline J -leaded Package
The dimesion in parenthesis is reference value

● SOP/SSOP/TSOP Packages

Unit: mm

M18 SOP008-P-0225

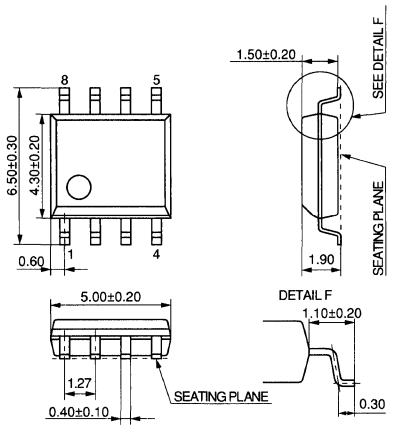

M19 SOP018-P-0300

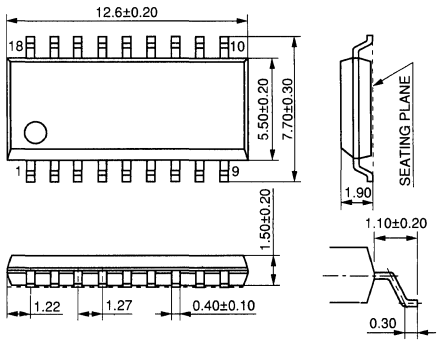

M20 SOP028-P-0425

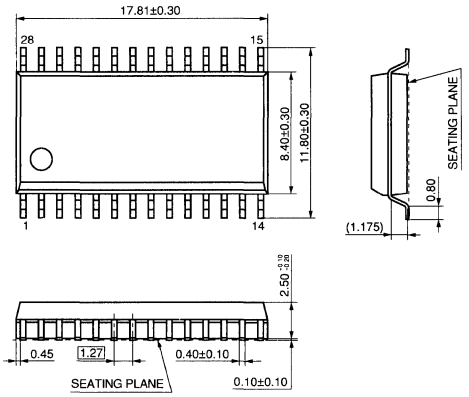

M21 SSOP042-P-0450

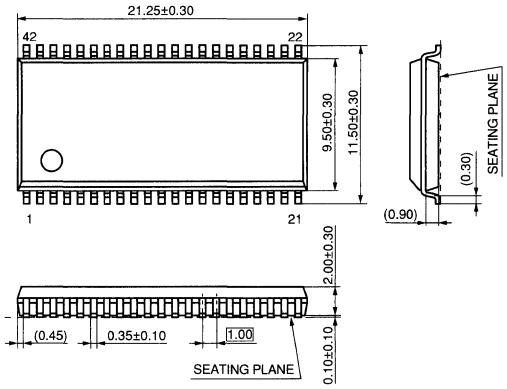

M22 SSOP050-P-0850

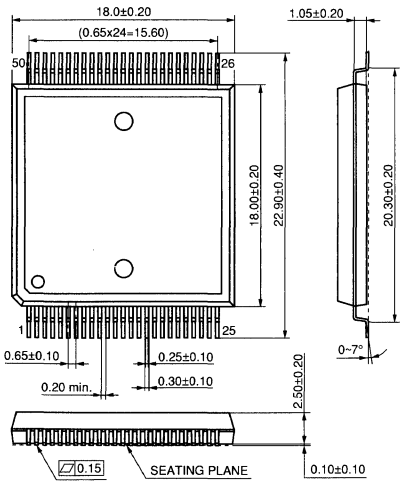

M23 TSOP026-P-0300A

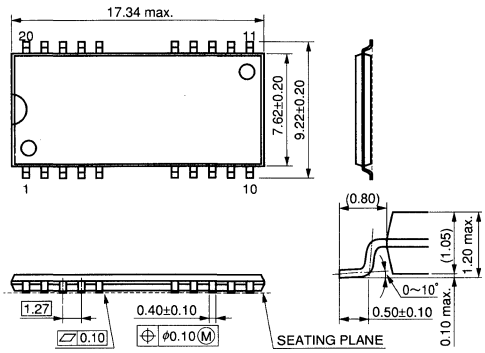

(Package Symbol) SOP = Small Outline Package (PANAFLAT PACKAGE), SSOP = Shrunk Small Outline Package, TSOP = Thin Small Outline Package

The dimesion in parenthesis is reference value

● SOP/SSOP/TSOP Packages (continued)

Unit: mm

M24 TSOP026-P-0300B

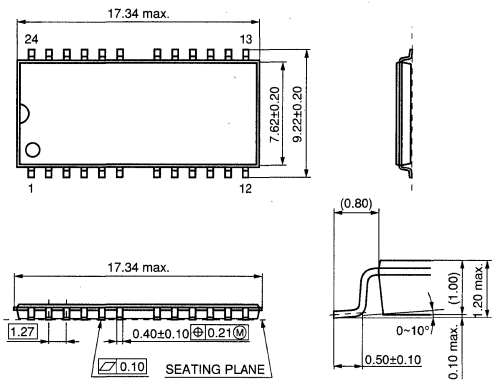

M25 TSOP028-P-0400

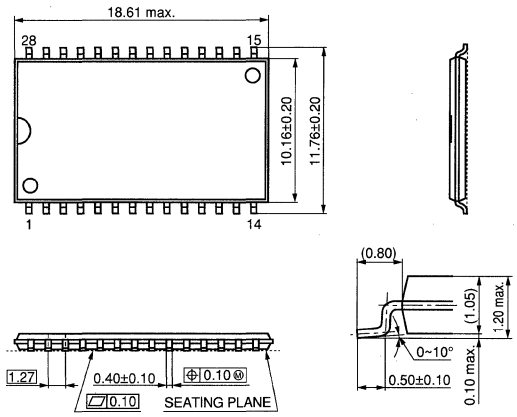

M26 TSOP044-P-0400A

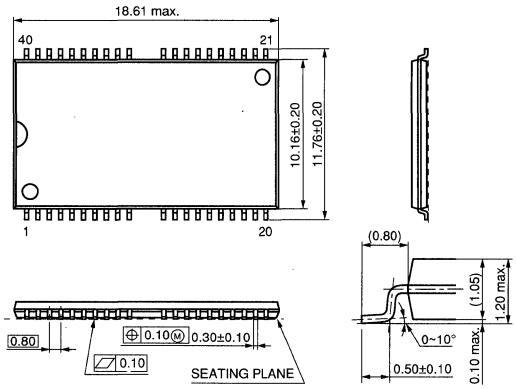

M27 TSOP044-P-0400

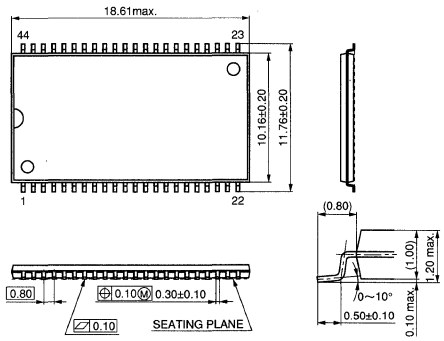

M28 TSOP050-P-0400A

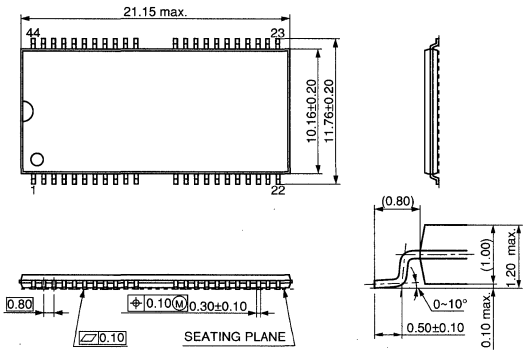

M29 TSOP050-P-0400

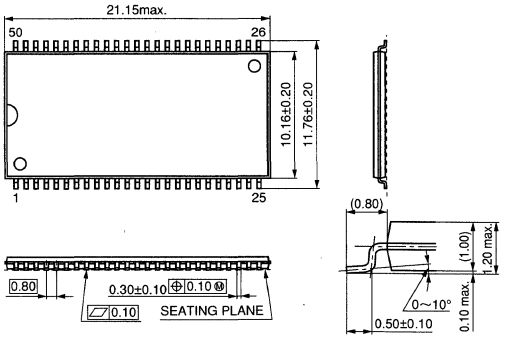

(Package Symbol) TSOP = Thin Small Outline Package
The dimesion in parenthesis is reference value

● CCD Area Image Sensors

Unit: mm

C1 WDIP016-G-0500B

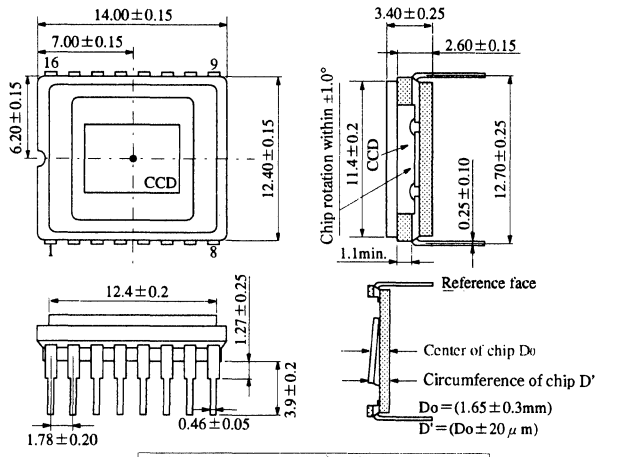

C2 WDIP020-G-0600A

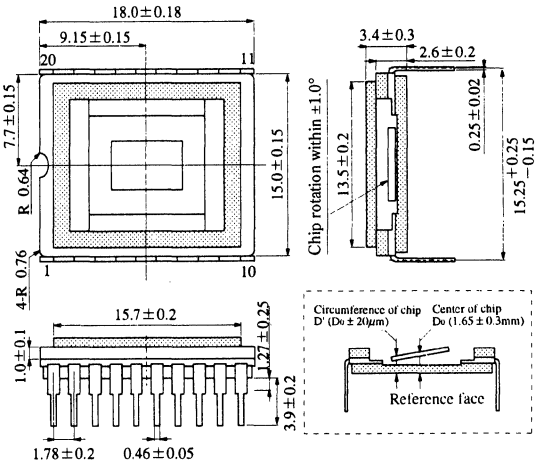

C3 WDIP020-C-0600A

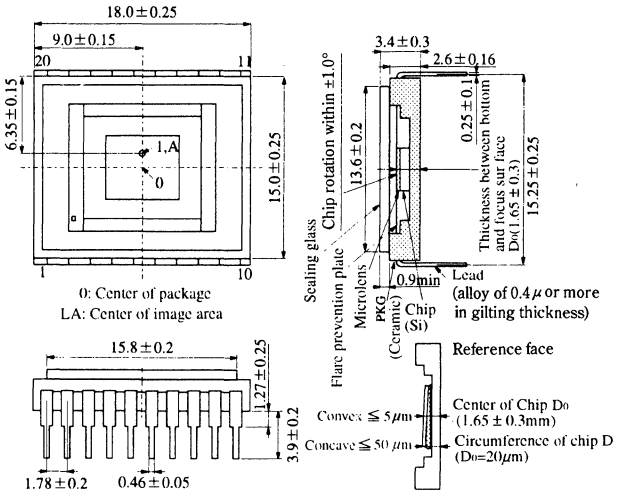

C4 WDIP020-C-0600C

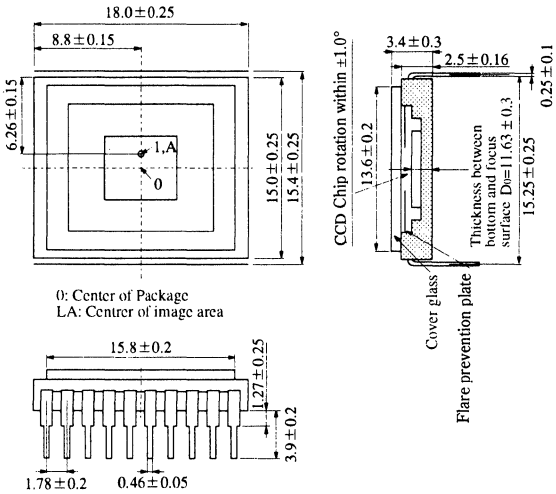

C5 WDIP020-C-0600D

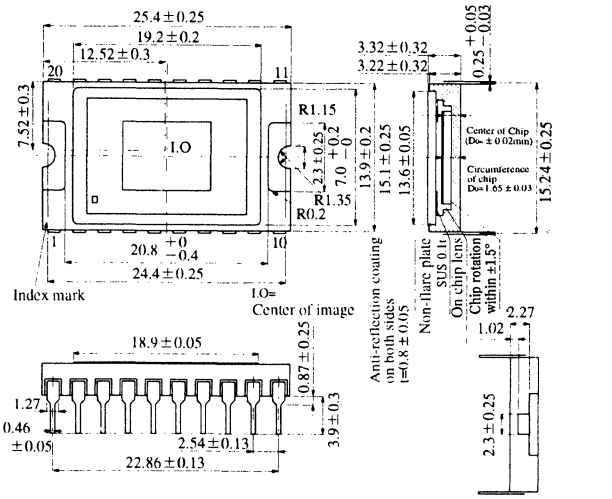

C6 WDIP032-C-0710

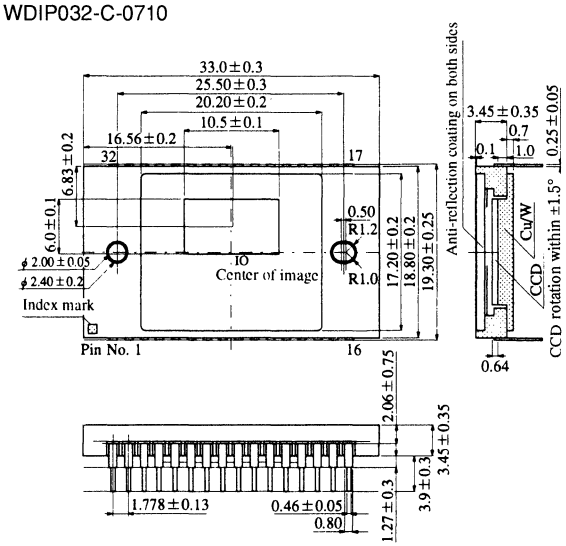

● CCD Area Image Sensors (continued)

Unit: mm

C7 WDIP032-C-0600B

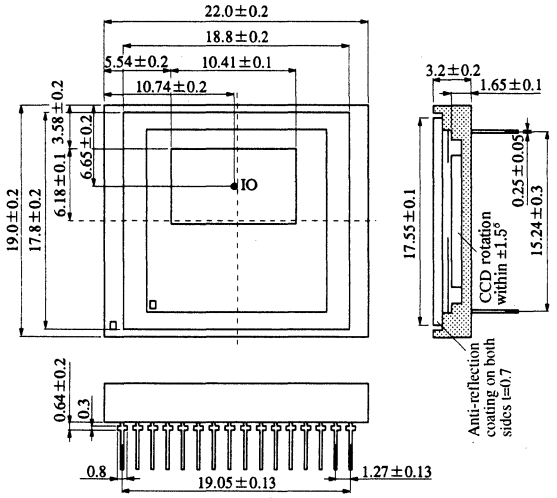

C8 WDIP014-P-0400C, WDIP014-P-0400D

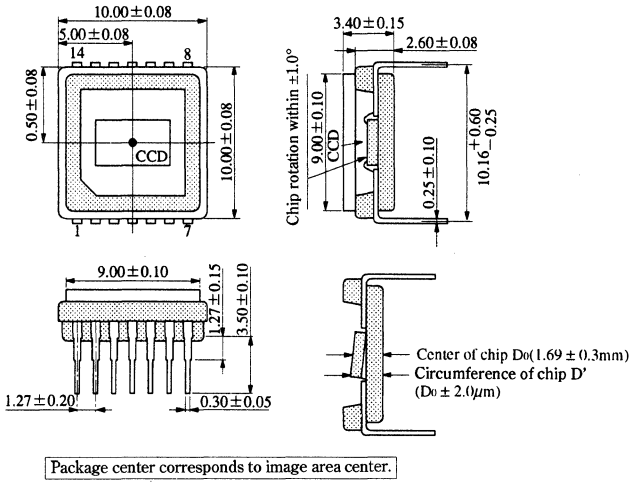

C9 WDIP014-P-0400E

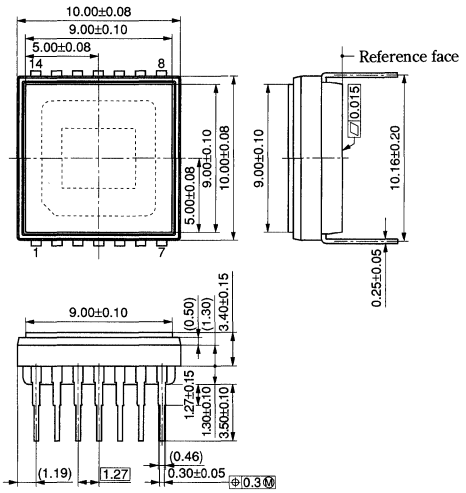

● CCD Linear Image Sensors

Unit: mm

C10 WDIP022-G-0470

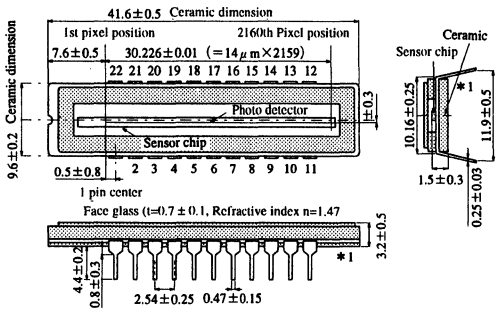

C11 WDIP022-G-0450

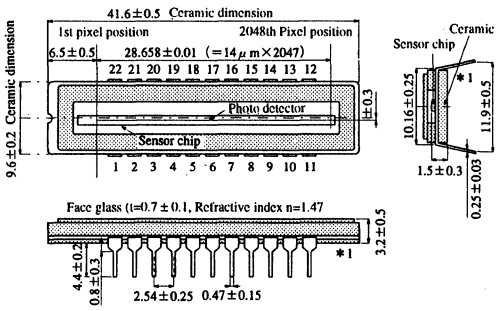

Package Outlines (CCD Linear Image Sensors)

● CCD Linear Image Sensors (continued)

Unit: mm

C12 WDIP022-C-0400

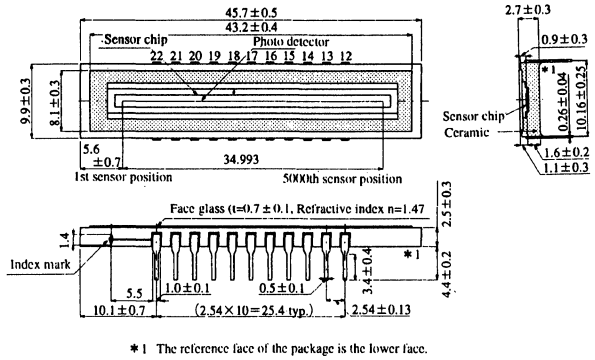

*1 The reference face of the package is the lower face.

C15 WDIP022-C-0400B

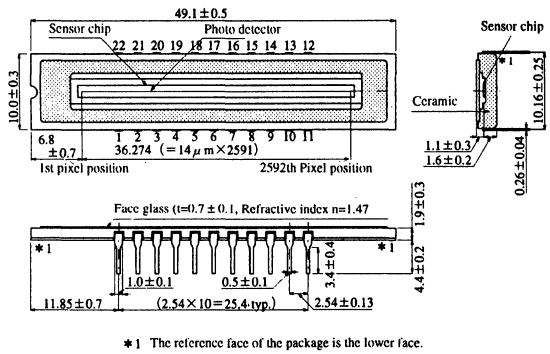

*1 The reference face of the package is the lower face.

C13 WDIP022-G-0400D

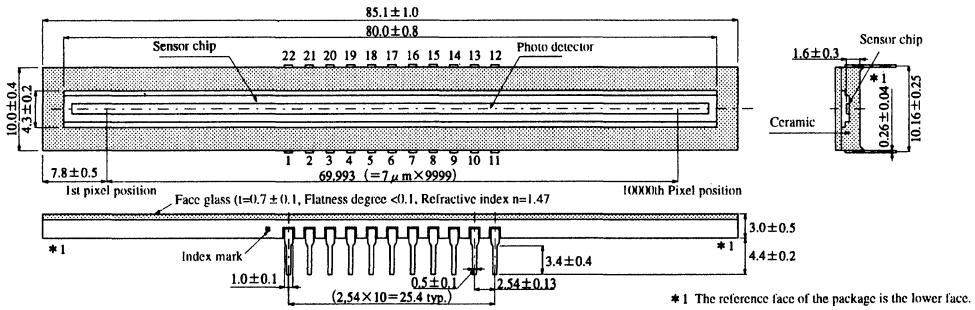

*1 The reference face of the package is the lower face.

C14 WDIP040-C-0400

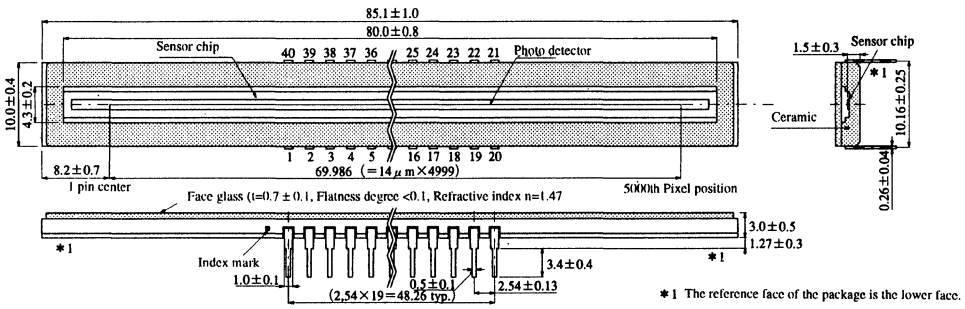

*1 The reference face of the package is the lower face.

C16 WDIP022-G-0470B

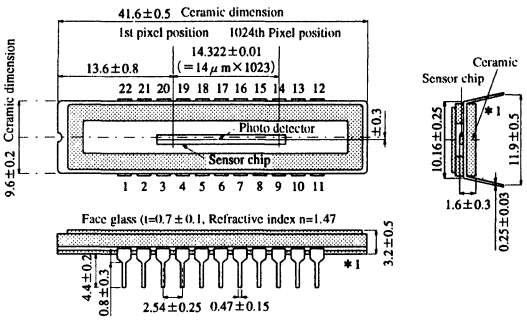

*1 The reference face of the package is the lower face.

Unit: mm

C17 (B/W CCD Camera Module Dimensions)

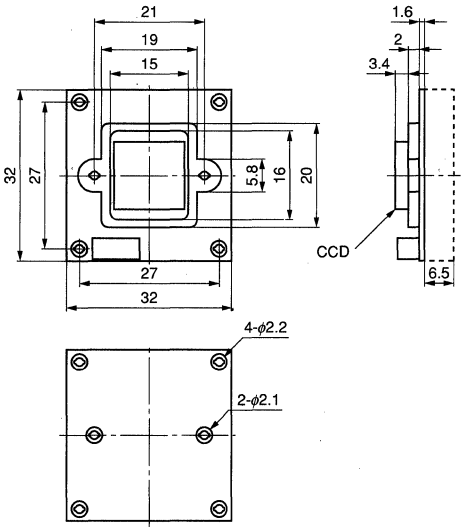

C18 (Color CCD Camera Module Dimensions)

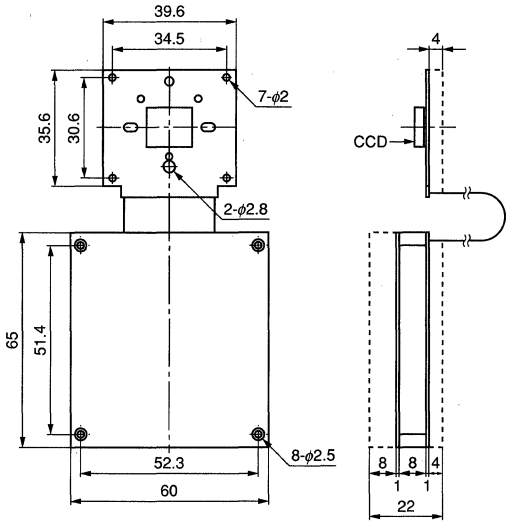

C19 (Color CCD Camera Module Dimensions)

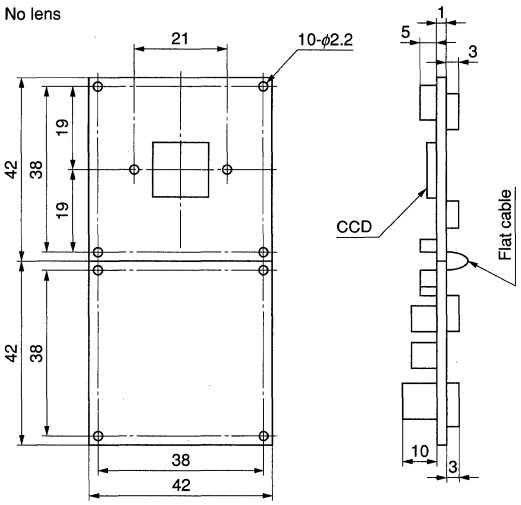

C20 (EVF)

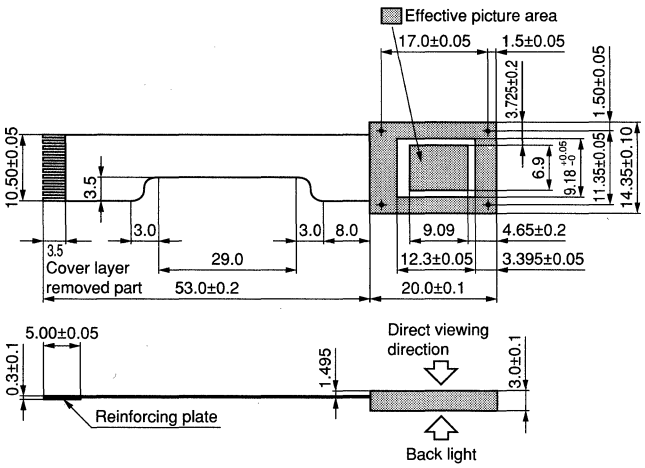

C21 (VPS)

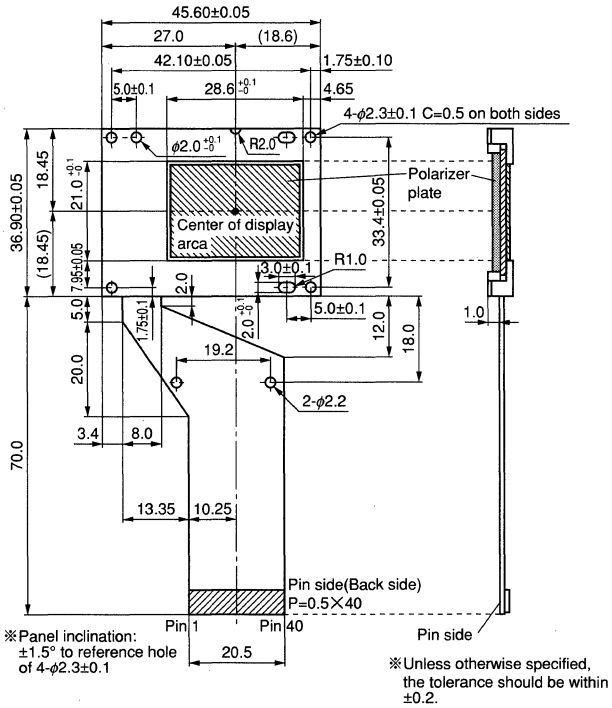

● SIL Packages

Unit: mm

B1 HSIP003-P-0000

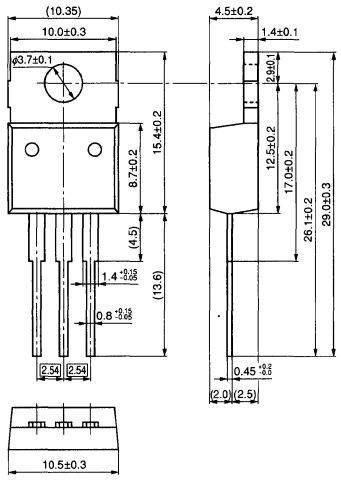

B2 HSIP003-P-0000A

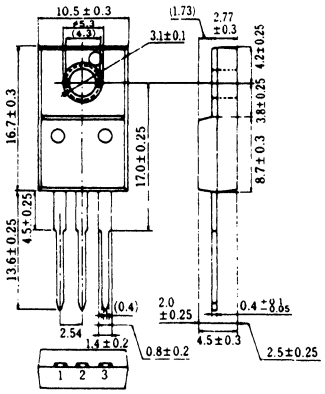

B3 HSIP003-P-0000B

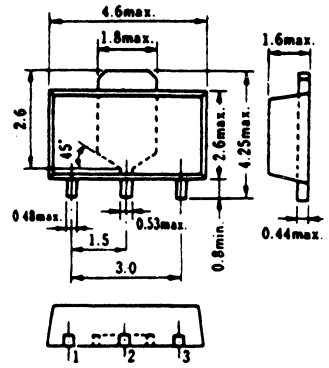

B4 SSIP003-P-0000

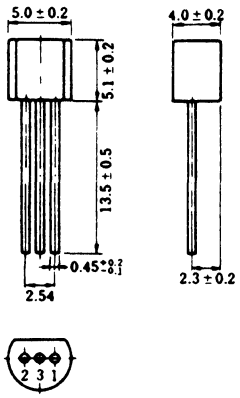

B5 SSIP003-P-0000A

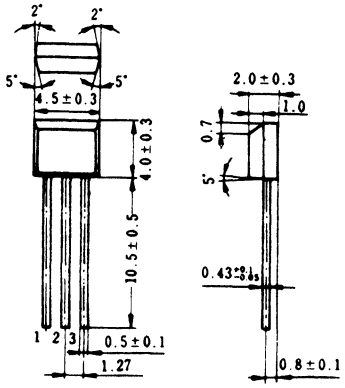

B6 SSIP003-P-0000B

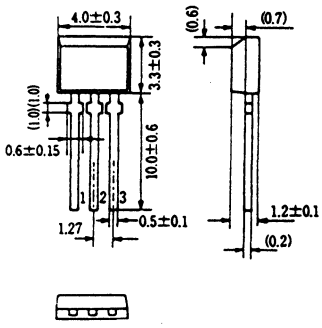

B7 SSIP003-P-0000C

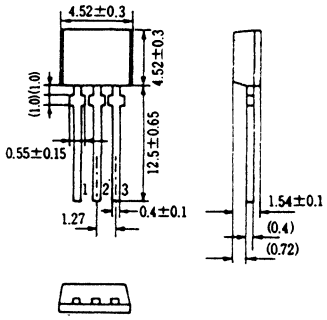

B8 SSIP003-P-0000E

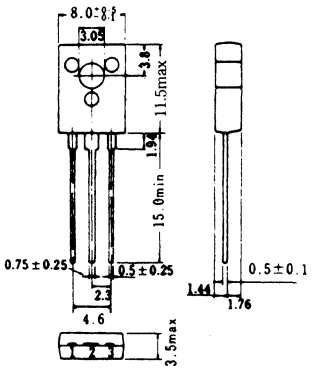

B9 SSIP004-P-0000

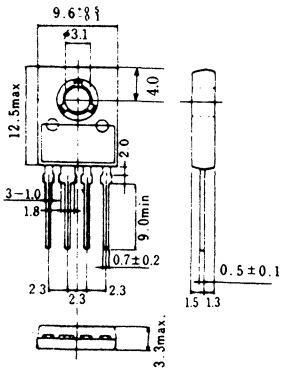

(Package Symbol) HSIP = Heat-sink Single-In-Line Plastic Package , SSIP = Shrunk Single In-Line Package

Package Outlines (Bipolar ICs)

● SIL Packages (continued)

Unit: mm

B10 SSIP004-P-0000A

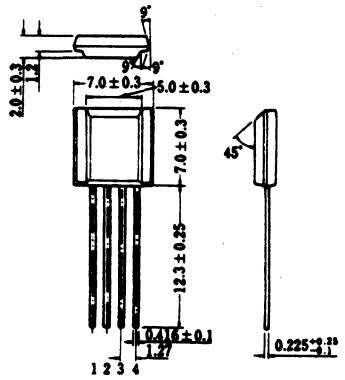

B11 SSIP004-P-0000B

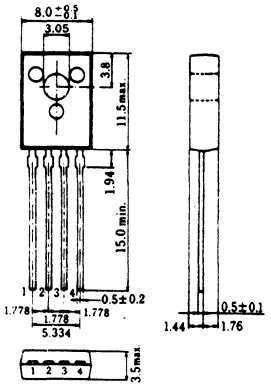

B12 HSIP005-P-0000

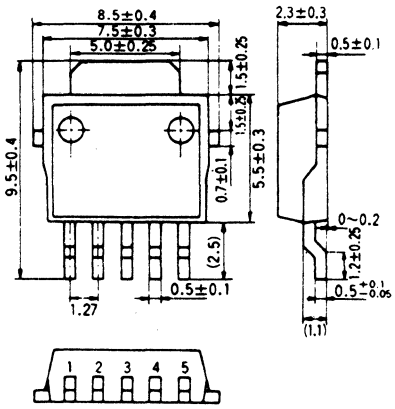

B13 HSIP007-P-0000

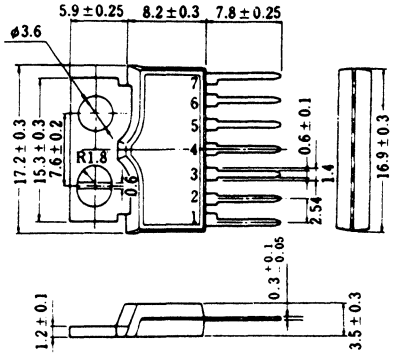

B14 SIP007-P-0000

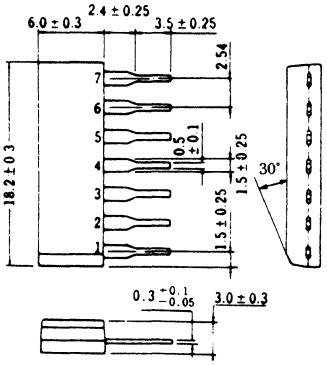

B15 HSIP009-P-0000

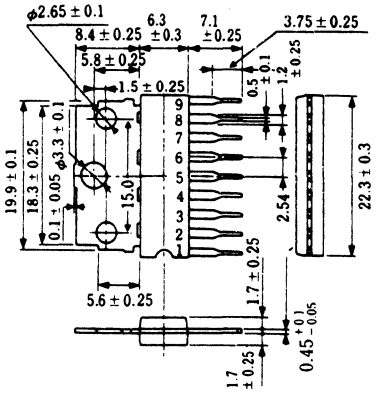

B16 HSIP009-P-0000A

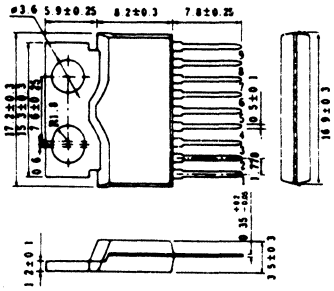

B17 SIP009-P-0000C

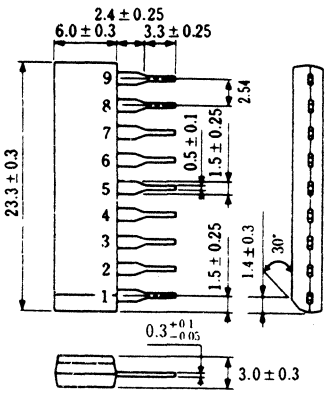

B18 SIP009-P-0000D

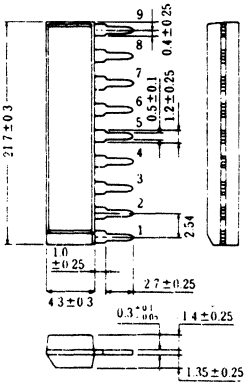

(Package Symbol) HSIP = Heat-sink Single-In-Line Plastic Package, SIP = Single-In-Line Package, SSIP = Shrunk Single-In-Line Package

● SIL Packages (continued)

Unit: mm

B19 SIP010-P-0000

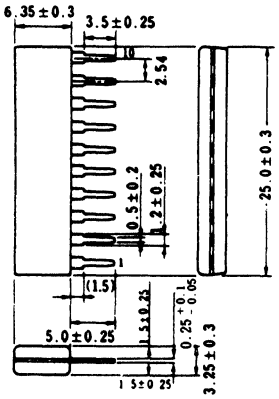

B20 SSIP010-P-0000

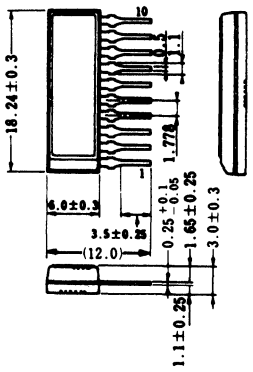

B21 HSIP011-P-0000

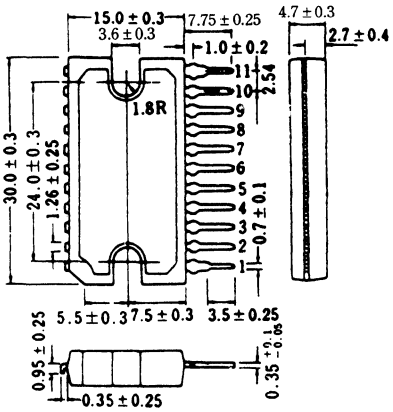

B22 HSIP012-P-0000

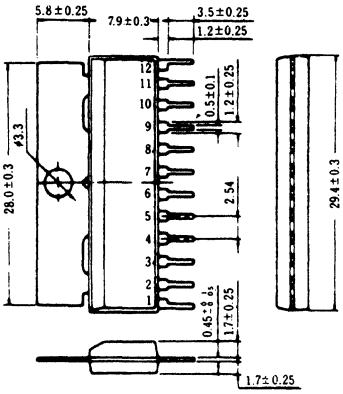

B23 HSIP012-P-0000A

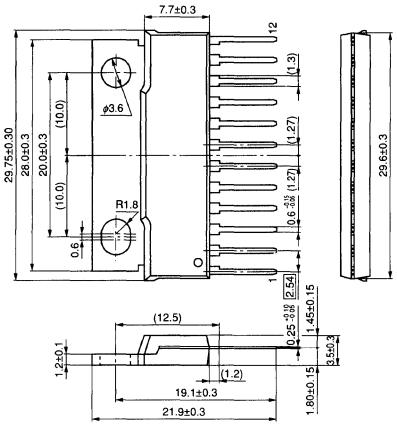

B24 HSIP012-P-0000B

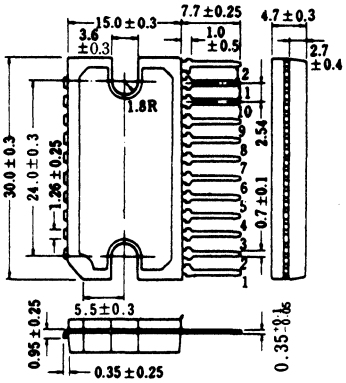

B25 SIP012-P-0000

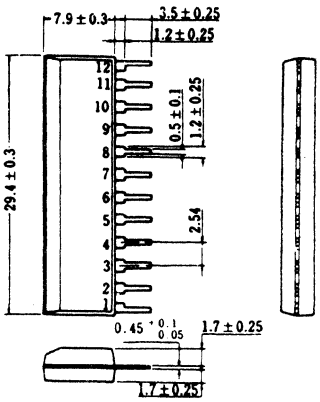

B26 (SIL-13)

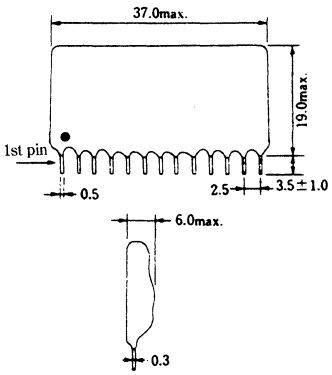

B27 SSIP013-P-0000

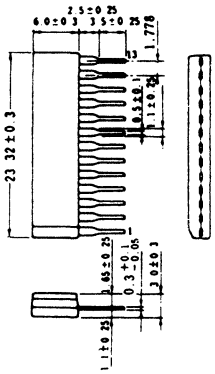

(Package Symbol) HSIP = Heat-sink Single-In-Line Plastic Package, SIP = Single-In-Line Package, SSIP = Shrunk Single-In-Line Package

Package Outlines (Bipolar ICs)

● SIL Packages (continued)

Unit: mm

B28 ZIP014-P-0300

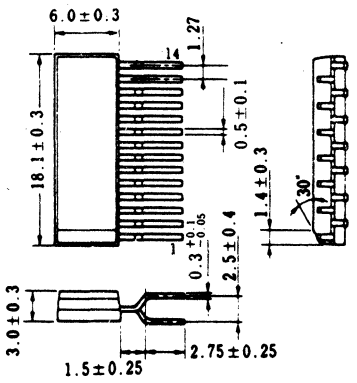

B29 HZIP015-P-0735A

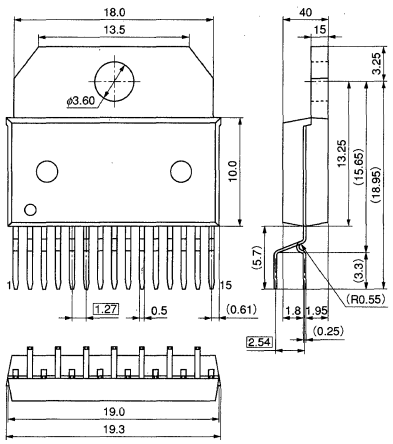

B30 HZIP016-P-0665

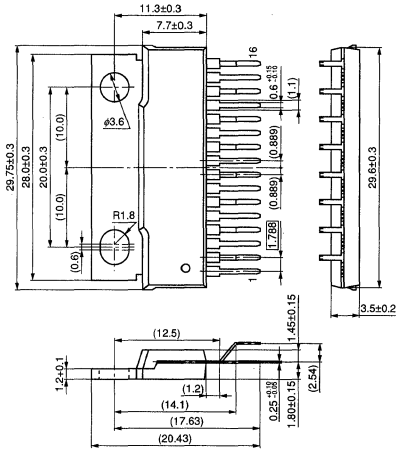

B31 ZIP018-P-0350A

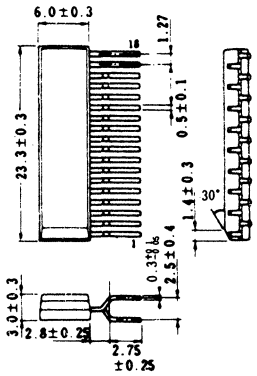

B32 HZIP023-P-0138

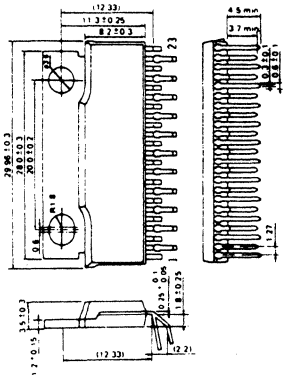

B33 HZIP023-P-0400

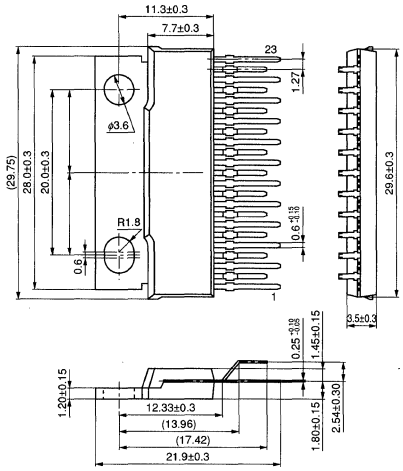

(Package Symbol) HZIP = Heat-sink Zigzag-In-Line Plastic Package, ZIP = Zigzag-In-Line Package

● DIL Packages

Unit: mm

B34 HDIP006-P-0300

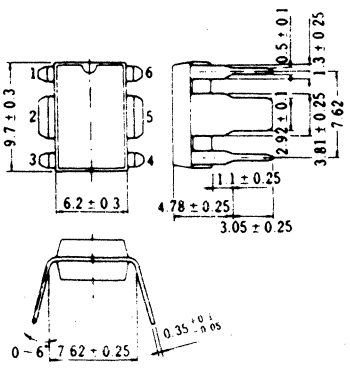

B35 DIP008-P-0300B

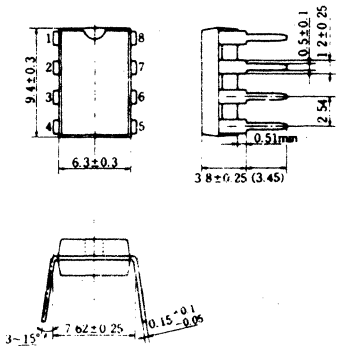

(Package Symbol) DIP = Dual-In-Line Package, HDIP = Heat-sink Dual-In-Line Plastic Package

● DIL Packages (continued)

Unit: mm

B36 DIP014-P-0300C

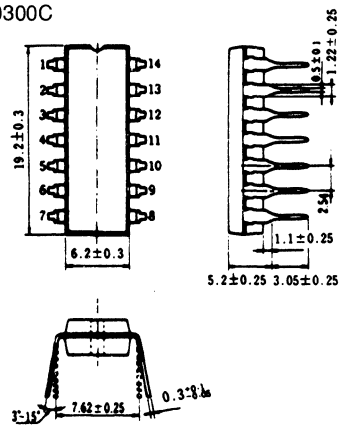

B37 DIP014-P-0300D

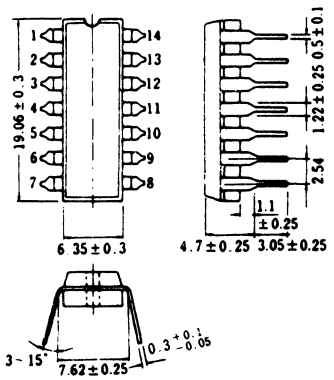

B38 DIP016-P-0300D

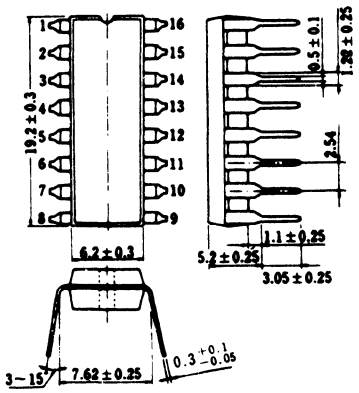

B39 DIP016-P-0300F

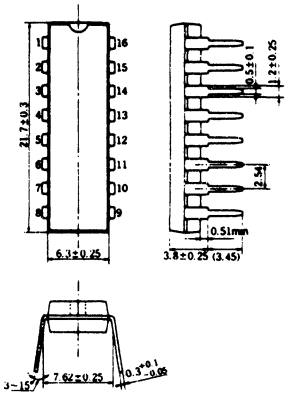

B40 HDIP016-P-0300

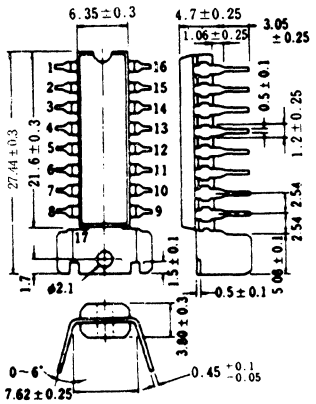

B41 DIP018-P-0300D

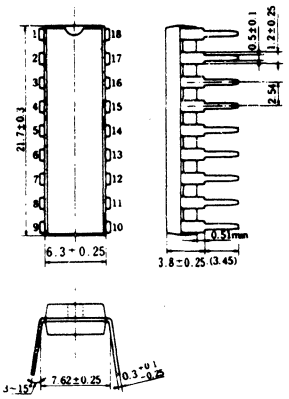

B42 SDIP018-P-0300A

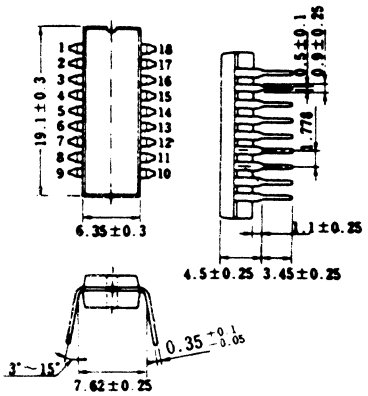

B43 SDIP018-P-0550

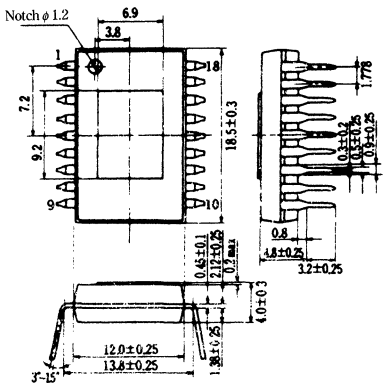

(Package Symbol) DIP = Dual-In-Line Package, HDIP = Heat-sink Dual-In-Line Plastic Package, SDIP = Shrunk Dual-In-Line Package

Package Outlines (Bipolar ICs)

● DIL Packages (continued)

Unit: mm

B44 DIP020-P-0300A

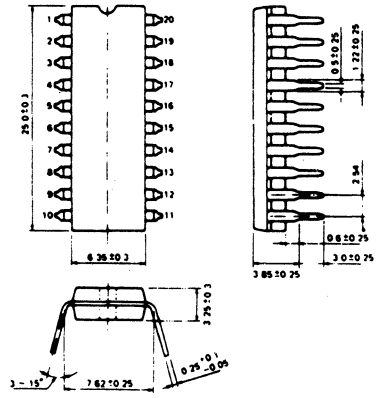

B45 DIP020-P-0400

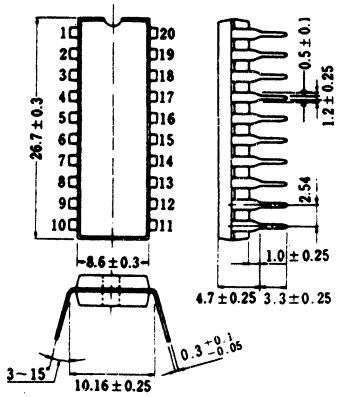

B46 SDIP020-P-0300

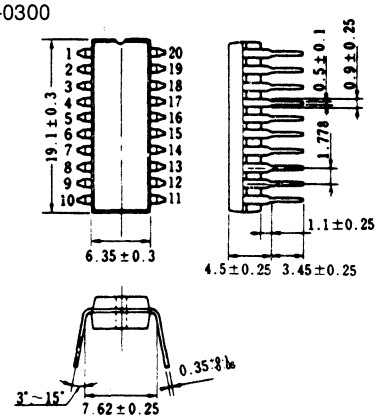

B47 DIP022-P-0400A

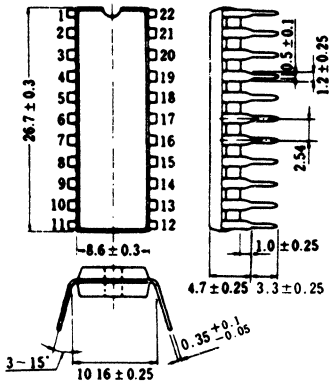

B48 SDIP022-P-0300A

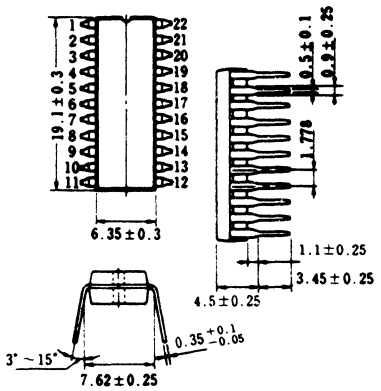

B49 DIP024-P-0600A

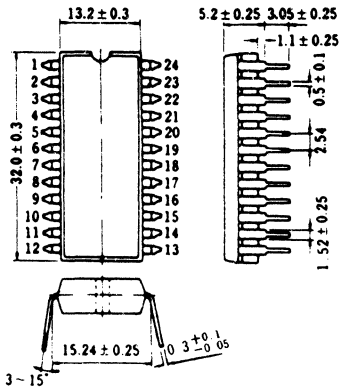

B50 SDIP024-P-0300

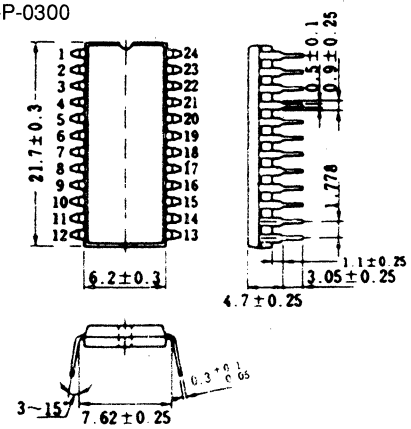

B51 SDIP024-P-0550

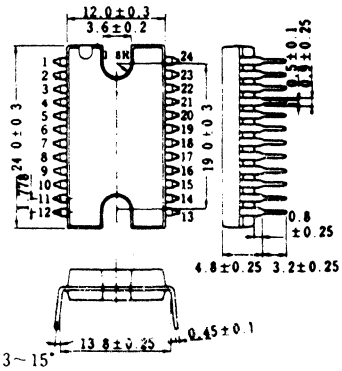

(Package Symbol) DIP = Dual-In-Line Package, SDIP = Shrunk Dual-In-Line Package

● DIL Packages (continued)

Unit: mm

B52 DIP028-P-0600B

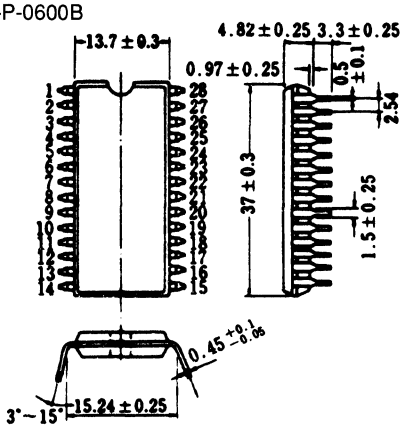

B53 SDIP028-P-0400B

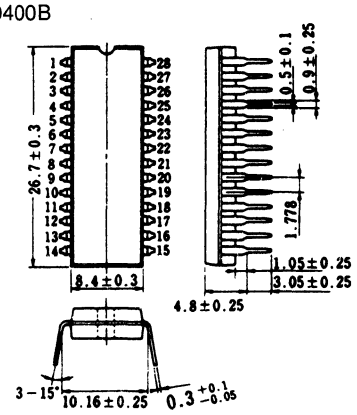

B54 SDIP030-P-0400

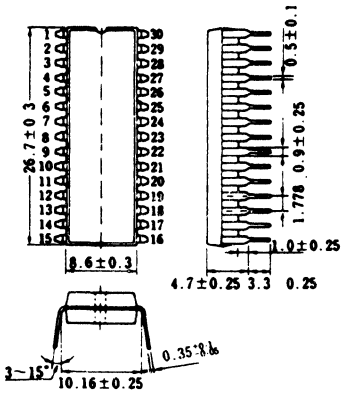

B55 SDIP042-P-0600A

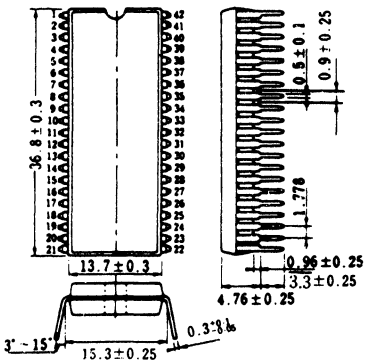

B56 SDIP048-P-0600

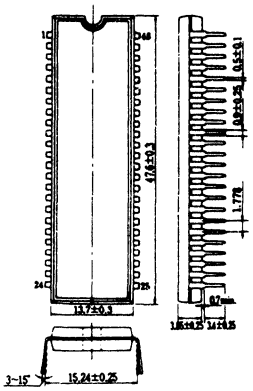

B57 SDIP052-P-0600A

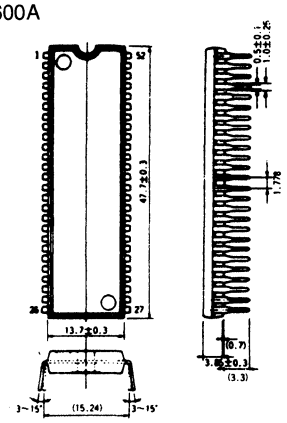

B58 SDIP064-P-0750B

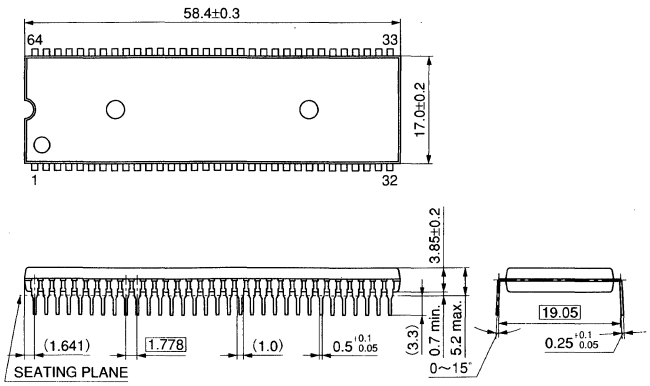

(Package Symbol) DIP = Dual-In-Line Package, SDIP = Shrunk Dual-In-Line Package

Package Outlines (Bipolar ICs)

● SOP Package

Unit: mm

B59 ESOP004-P-0200

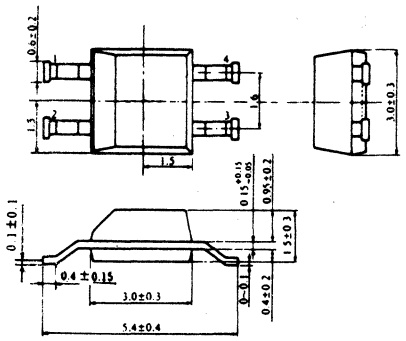

B60 SOP008-P-0225A

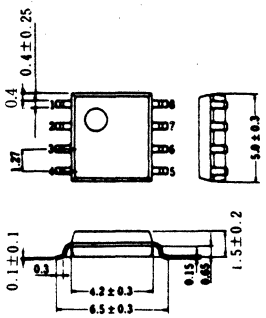

B61 SOP010-P-0225A

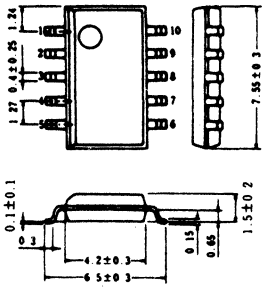

B62 SSOP010-P-0225

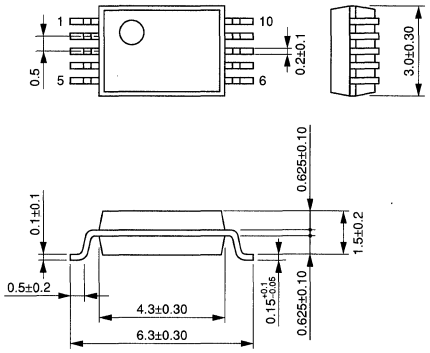

B63 SOP014-P-0225A

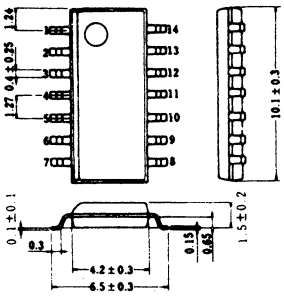

B64 SOP016-P-0225A

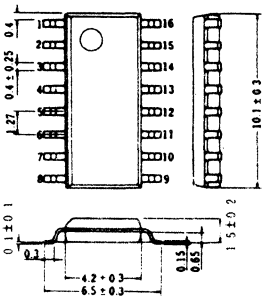

B65 SOP016-P-0300

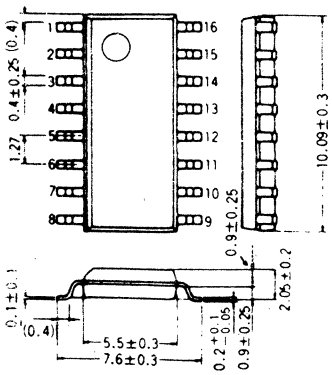

B66 SSOP016-P-0225

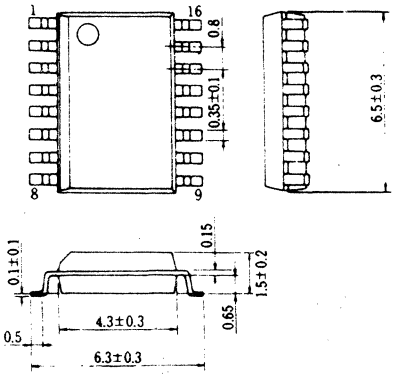

(Package Symbol) ESOP = Enlarged Small Outline Package, SOP = Small Outline Package, SSOP = Shrunk Small Outline Package

● SOP Packages (continued)

Unit: mm

B67 SSOP016-P-0225A

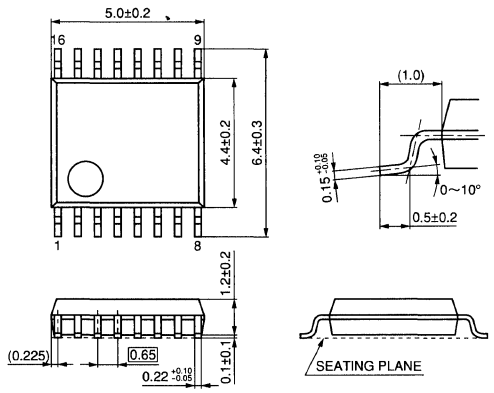

B68 SOP018-P-0300A

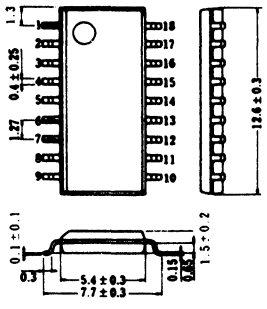

B69 SOP020-P-0300B

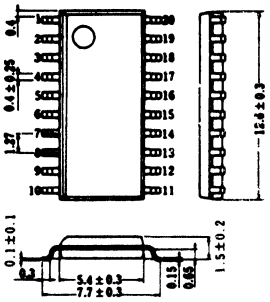

B70 SOP020-P-0300C

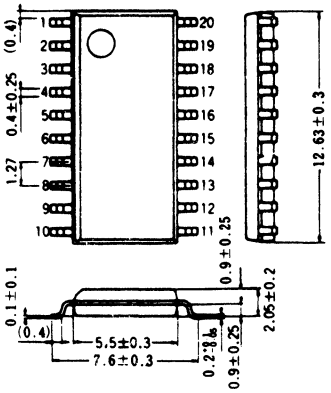

B71 SSOP020-P-0225A

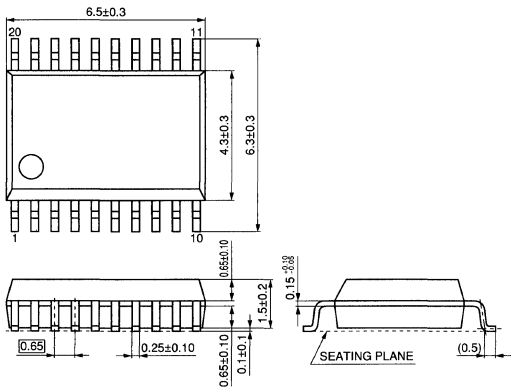

B72 SOP022-P-0375A

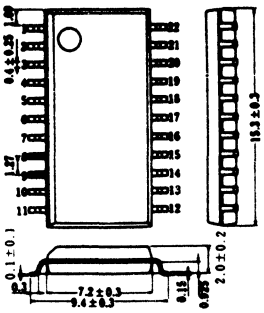

B73 HSOP024-P-0300A

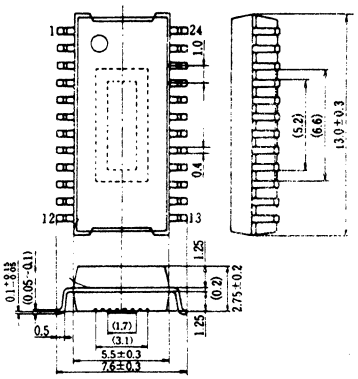

B74 HSOP024-P-0450

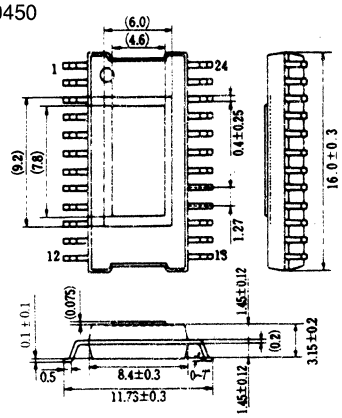

(Package Symbol) HSOP = Heat-sink Small Outline Package, SOP = Small Outline Package, SSOP = Shrunk Small Outline Package

Package Outlines (Bipolar ICs)

● SOP Packages (continued)

Unit: mm

B75 HSOP024-P-0450A

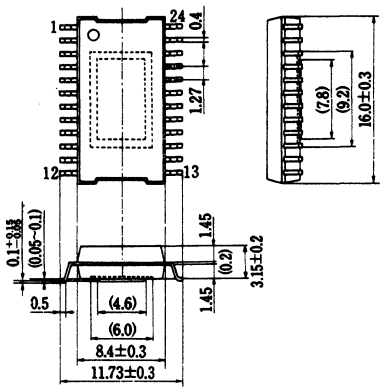

B76 SOP024-P-0375A

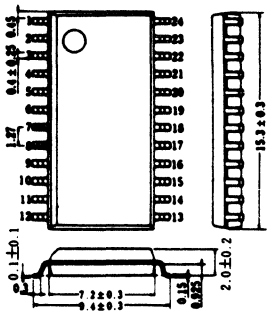

B77 SSOP024-P-0300A

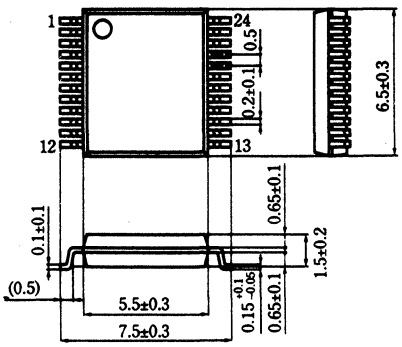

B78 SSOP024-P-0375

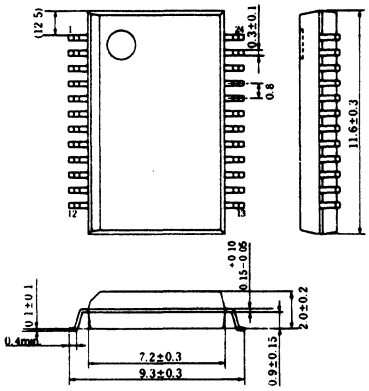

B79 HSOP028-P-0450

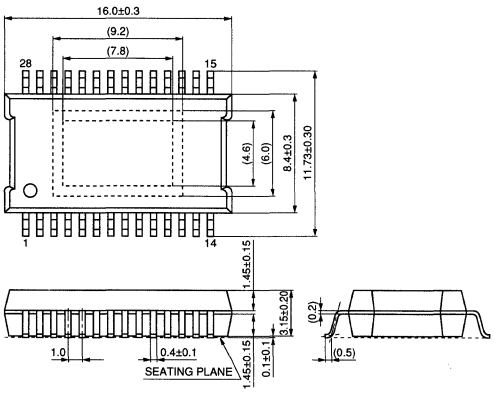

B80 HSOP028-P-0450A

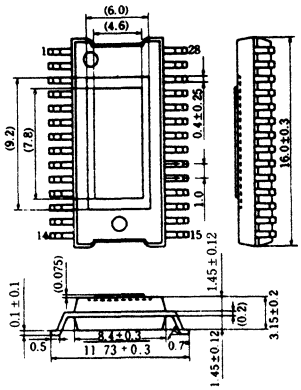

B81 HSOP042-P-0400

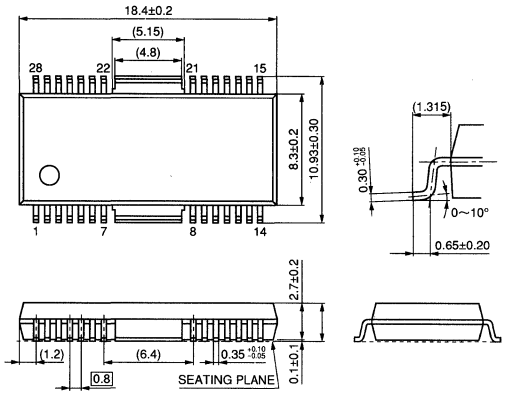

B82 SOP028-P-0375A

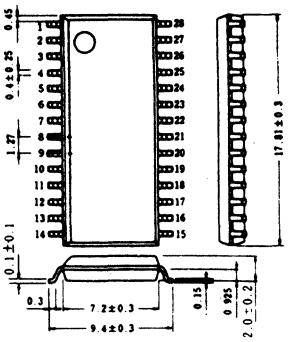

(Package Symbol) HSOP = Heat-sink Small Outline Package, SOP = Small Outline Package, SSOP = Shrunk Small Outline Package

● SOP Packages (continued)

Unit: mm

B83 SOP028-P-0375B

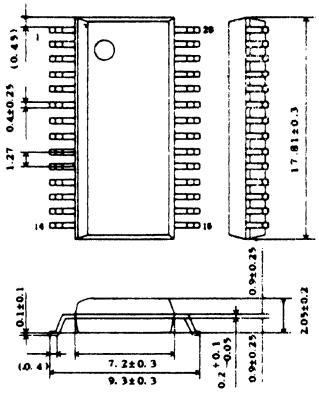

B84 SSOP028-P-0375

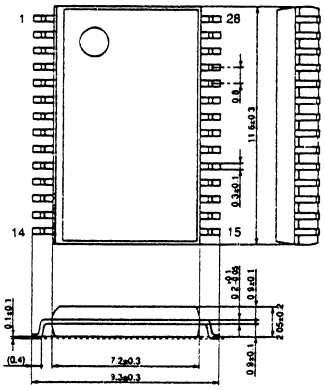

B85 SSOP028-P-0375A

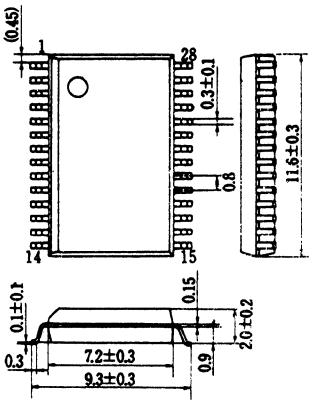

B86 SSOP028-P-0300

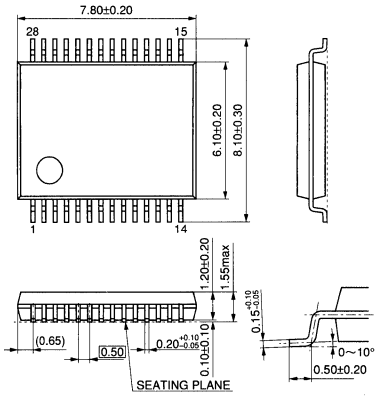

B87 SSOP032-P-0300

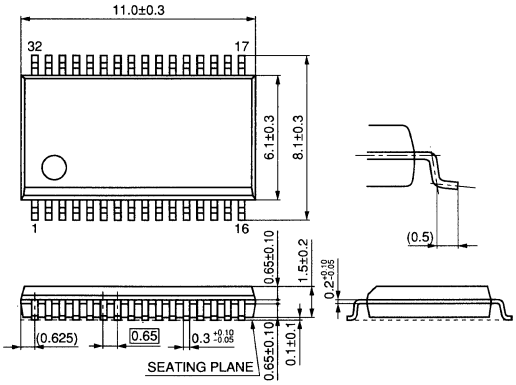

B88 SSOP032-P-0375

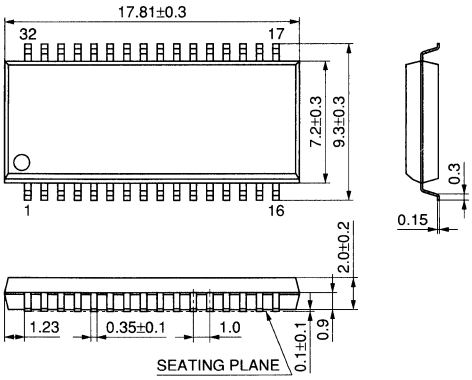

B89 SSOP036-P-0450

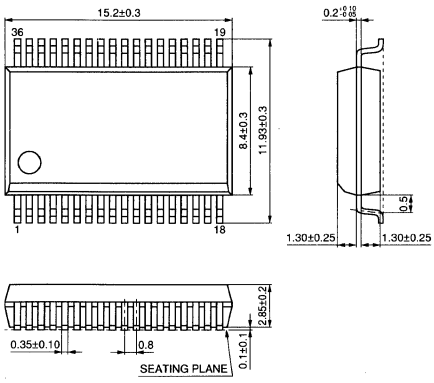

B90 SSOP036-P-0450A

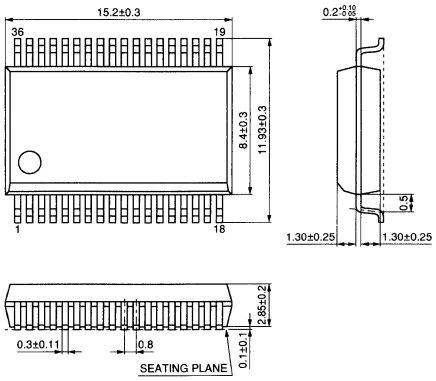

(Package Symbol) SOP = Small Outline Package, SSOP = Shrunk Small Outline Package

Package Outlines (Bipolar ICs)

● SOP Packages (continued)

Unit: mm

B91 SSOP042-P-0450A

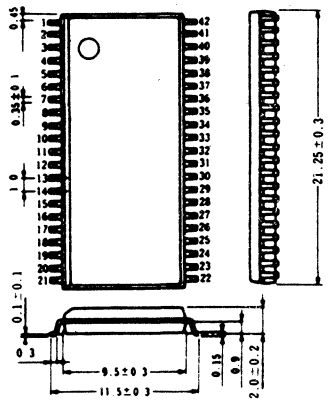

(Package Symbol) SSOP = Shrunk Small Outline Package

● Flat Packages

Unit: mm

B92 QFH032-P-0707A

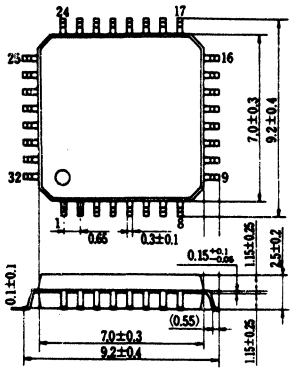

B93 QFP032-P-0707

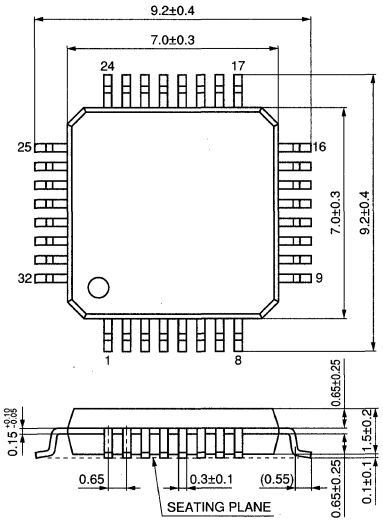

B94 QFH036-P-0710

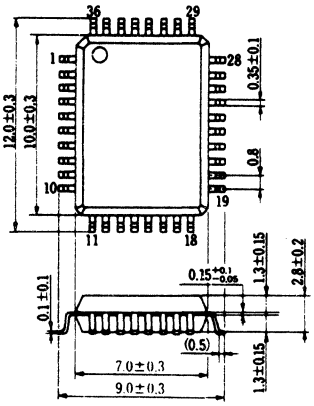

B95 QFH042-P-1010B

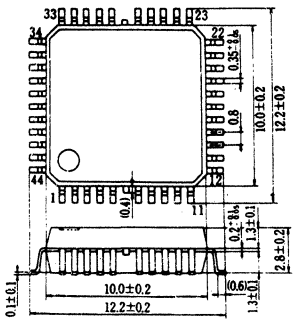

B96 QFP042-P-1010B

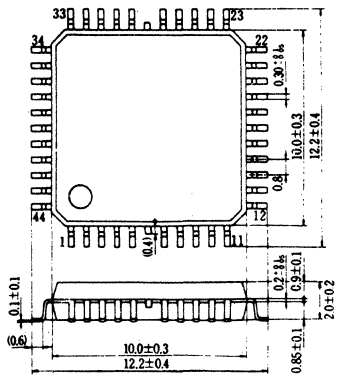

B97 QFH044-P-1010

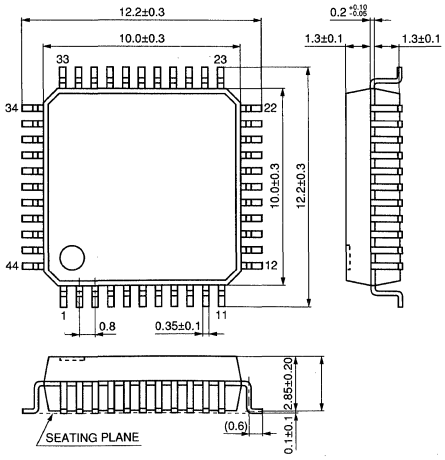

(Package Symbol) QFH = Quad Flat High Package, QFP = Quad Flat Package

● Flat Packages (continued)

Unit: mm

B98 QFP044-P-1010A

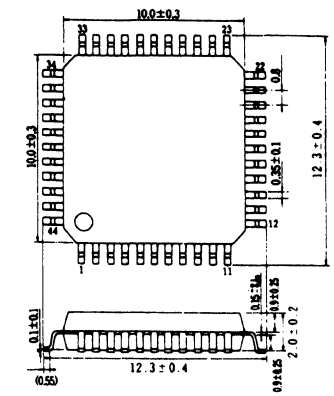

B99 QFP044-P-1010C

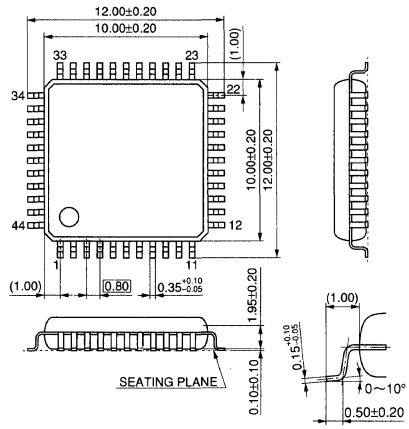

B100 LQFP048-P-0710

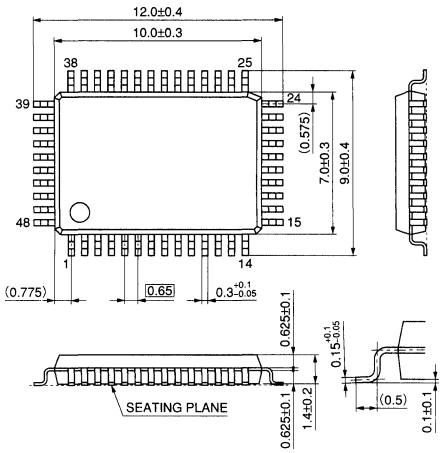

B101 QFH048-P-0707A

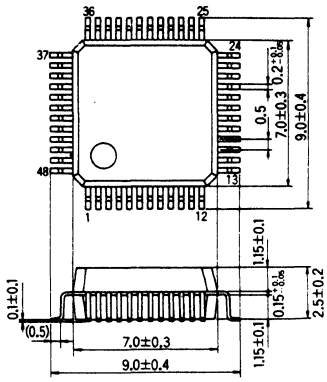

B102 QFH048-P-0710

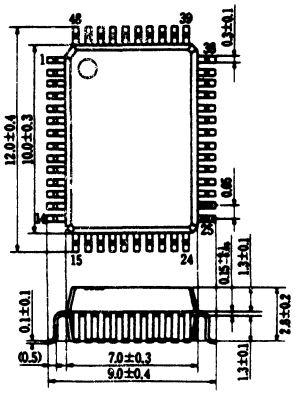

B103 QFH048-P-1010

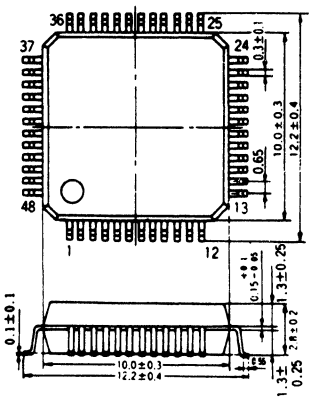

B104 QFH048-P-1212

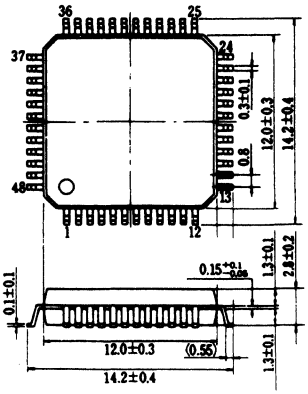

B105 QFH048-P-1212A

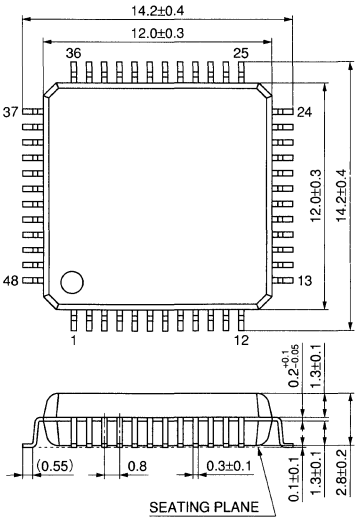

B106 CQFP-48

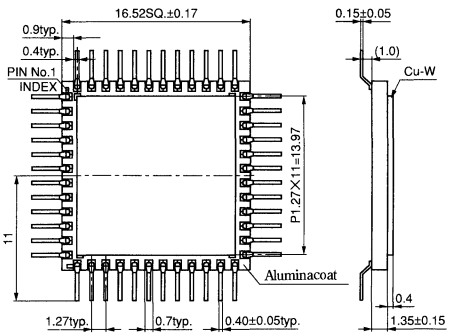

(Package Symbol) CQFP = Ceramic Quad Flat Package, LQFP = Low Prafile Quad Flat Package, QFH = Quad Flat High Package, QFP = Quad Flat Package

Package Outlines (Bipolar ICs)

● Flat Packages (continued)

Unit: mm

B107 QFP048-P-1010

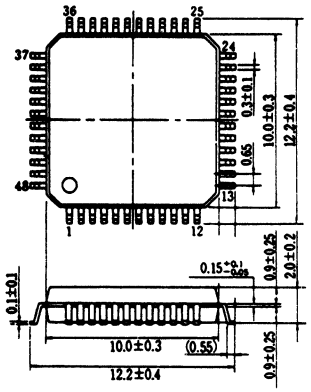

B108 QFP048-P-1212

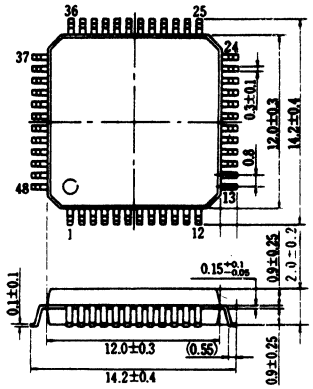

B109 QFP048-P-1212A

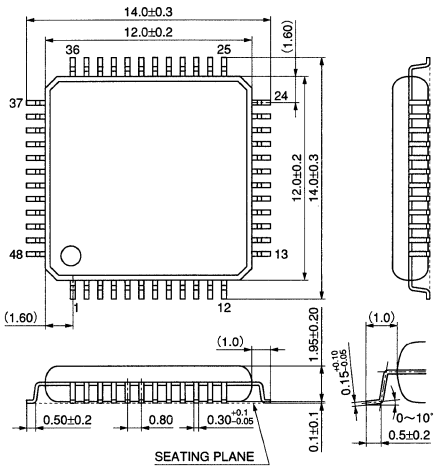

B110 QFP048-P-1414

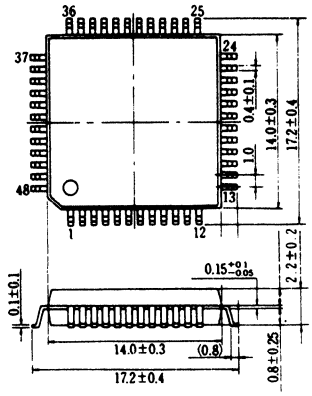

B111 LQFP064-P-1010

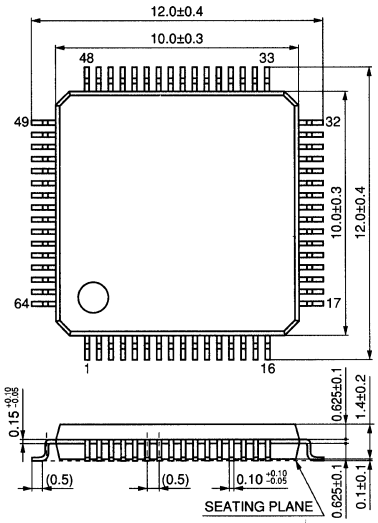

B112 QFH064-P-1010A

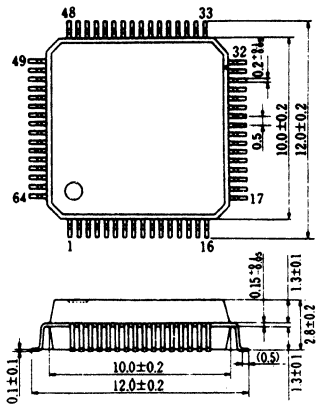

B113 QFH064-P-1212A

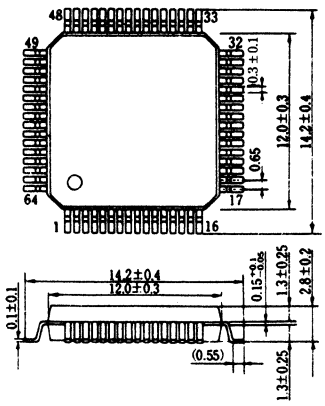

B114 QFH064-P-1414

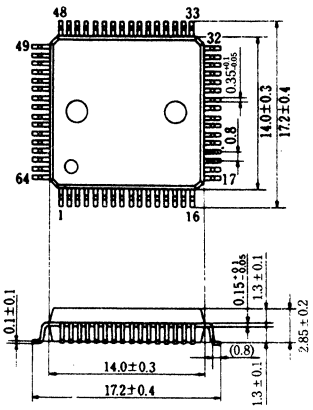

B115 QFH064-P-1414A

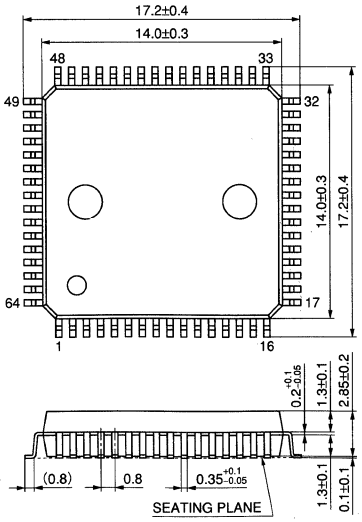

(Package Symbol) LQFP = Low Prafile Quad Flat Package, QFH = Quad Flat High Package, QFP = Quad Flat Package

● Flat Packages (continued)

Unit: mm

B116 QFS064-P-1414

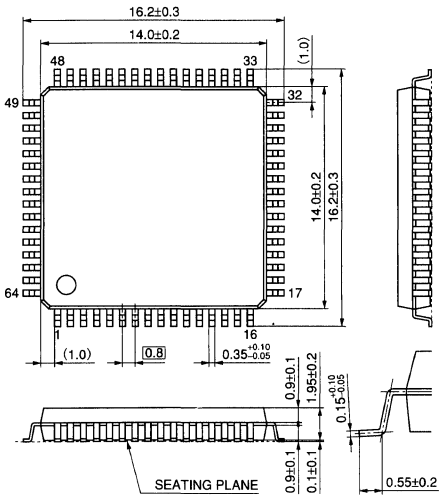

B117 QFH080-P-1212A

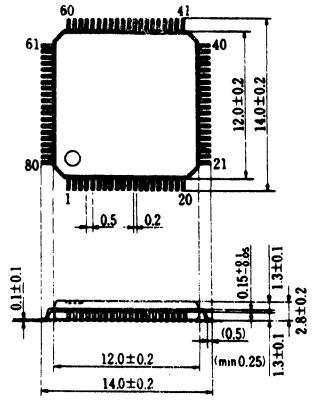

B118 QFP080-P-1212

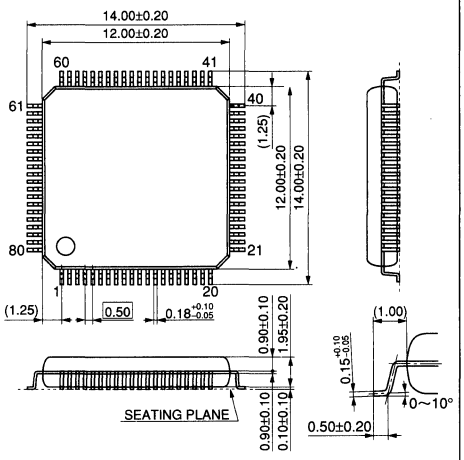

B119 QFH080-P-1420B

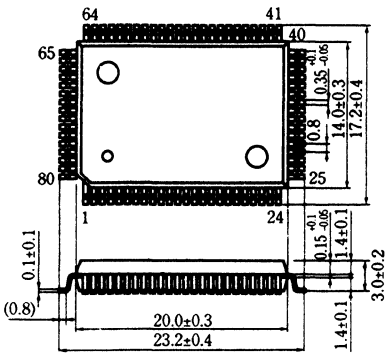

B120 QFH084-P-1818

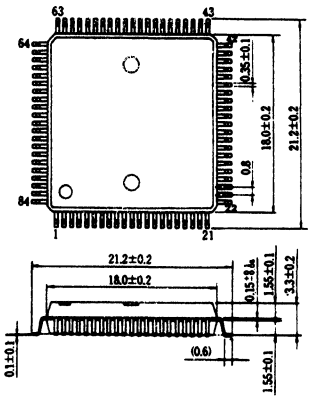

B121 QFH084-P-1818B

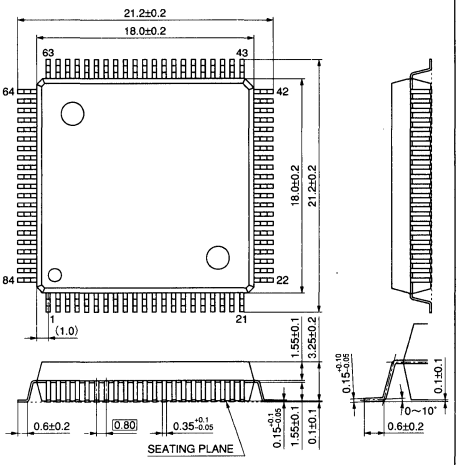

B122 QFH128-P-1420

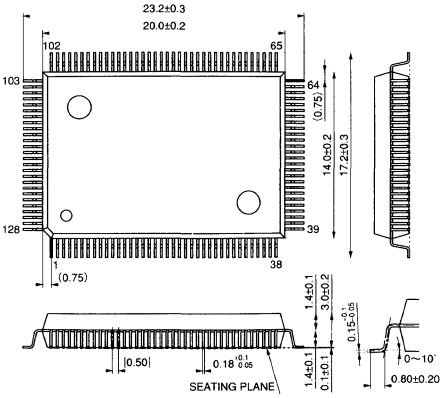

B123 QFN068-C-S950

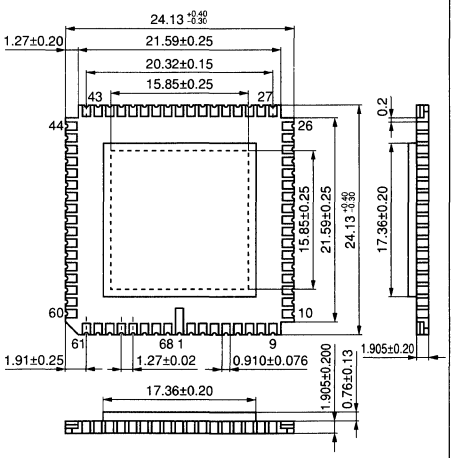

(Package Symbol) QFH = Quad Flat High Package, QFN = Quad Flat Nonleaded Package, QFP = Quad Flat Package, QFS = Quad Flat L-Leaded Small Package

Package Outlines (Discrete Semiconductors)

Unit: mm

D1 SS-Mini Type • 3 Pins (Transistor)

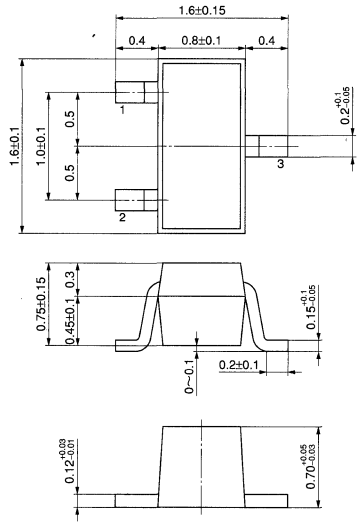

D2 SS-Mini Type • 3 Pins (Diode)

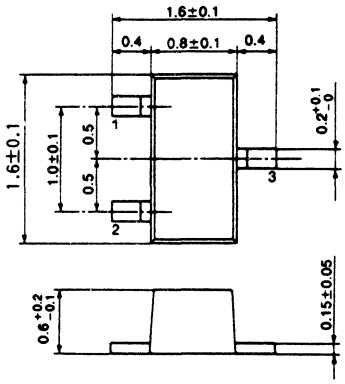

D3 S-Mini Type • 2 Pins (Standard Diode)

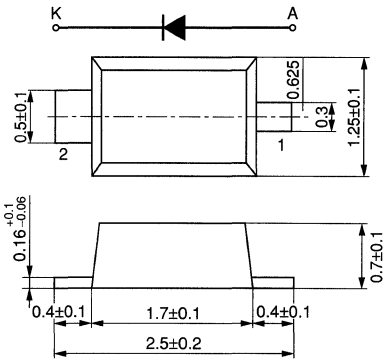

D4 S-Mini Type • 2 Pins (Variable Capacitance)

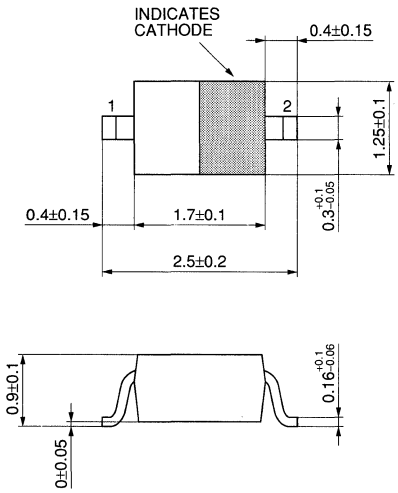

D5 S-Mini Type • 3 Pins

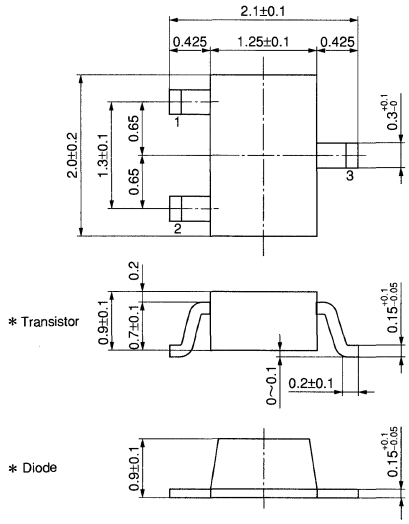

D6 S-Mini Type • 4 Pins (Transistor)

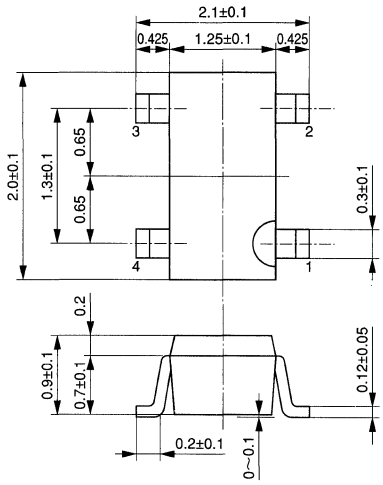

D7 S-Mini Type • 4 Pins (Diode)

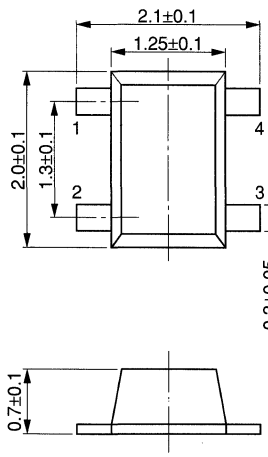

D8 S-Mini Type • 5 Pins

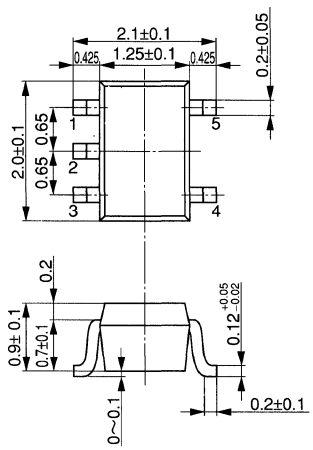

D9 S-Mini Type • 6 Pins

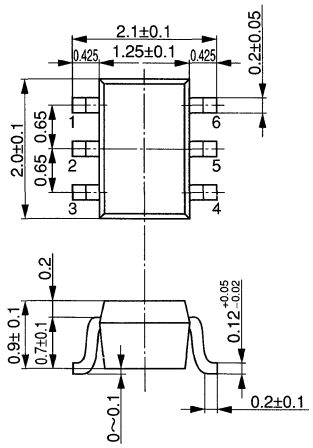

Package Outlines (Discrete Semiconductors)

Unit: mm

D10 S-Mini Type • 6 Pins (Diode)

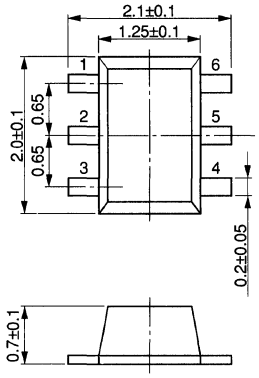

D11 Mini Type • 2 Pins

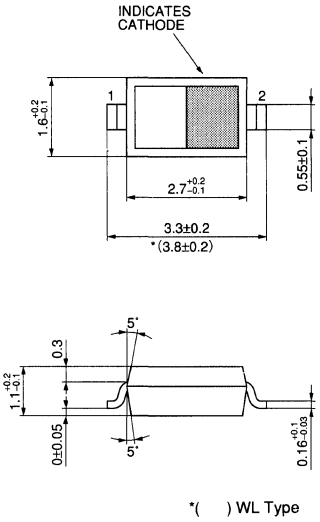

D12 Mini Type • 3 Pins

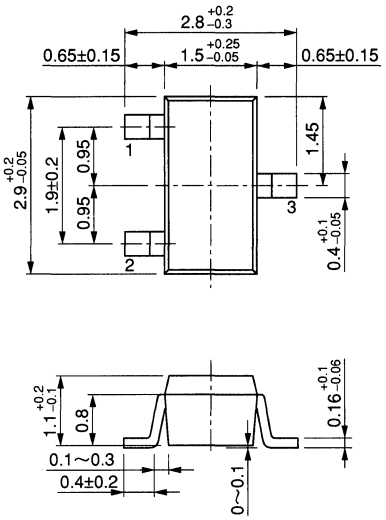

D13 Mini Type • 4 Pins (Transistor)

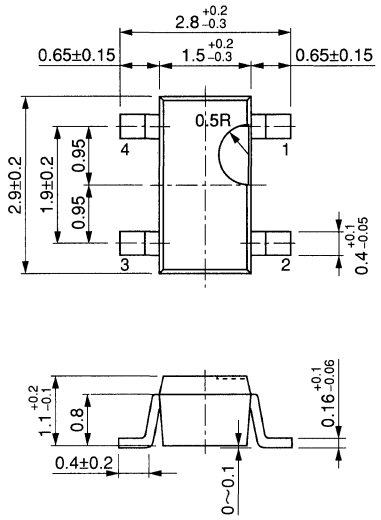

D14 Mini Type • 4 Pins (Diode)

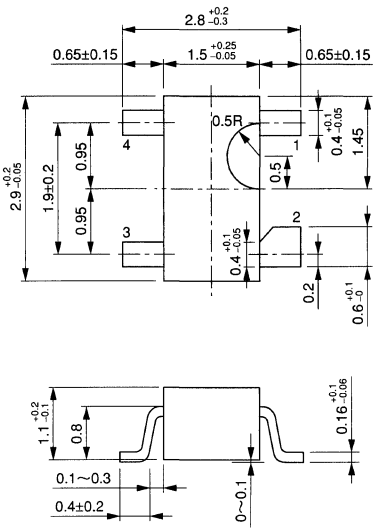

D15 Mini Type • 5 Pins

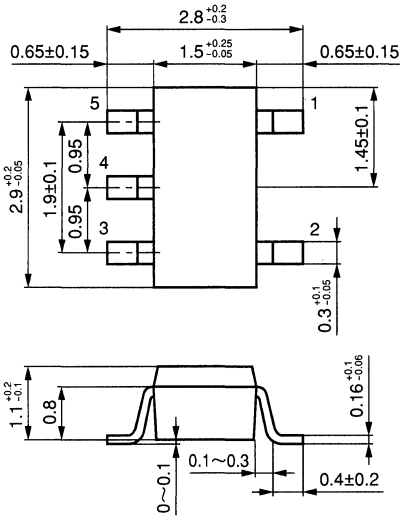

D16 Mini Type • 6 Pins

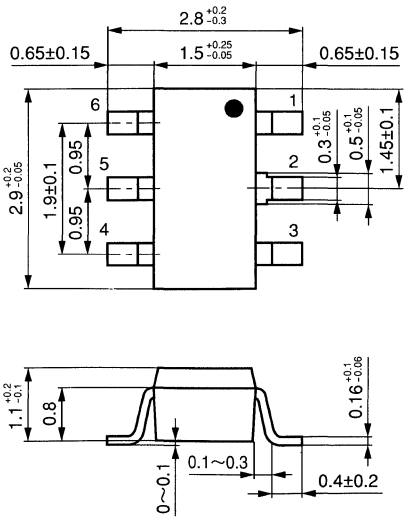

D17 Mini-Power Type • 2 Pins

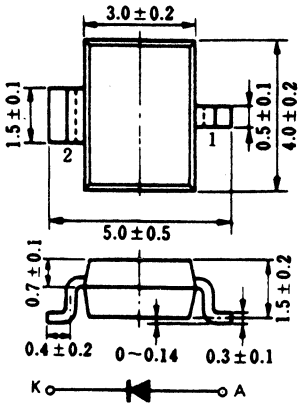

D18 New Mini-Power Type • 2 Pins

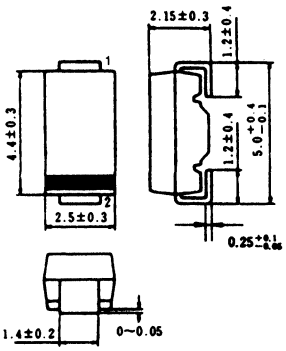

Package Outlines (Discrete Semiconductors)

Unit: mm

D19 Mini-Power Type • 3 Pins

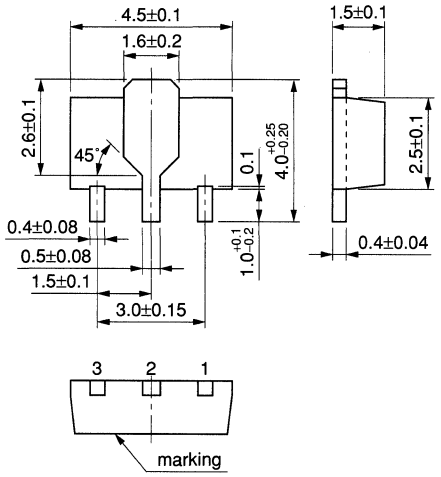

D20 Mini-Power Type • 6 Pins

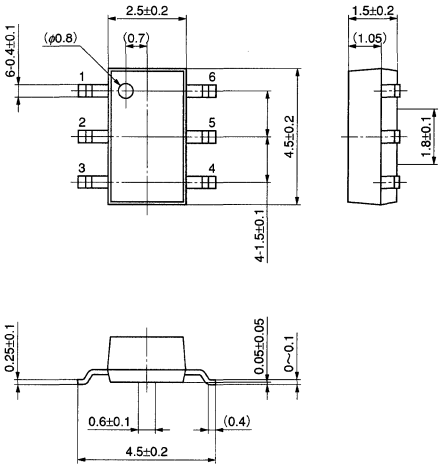

D21 T-Mini Type • 3 Pins (Diode)

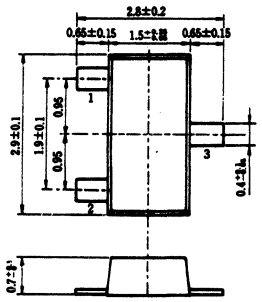

D23 Mini-Thin Type • 4 Pins

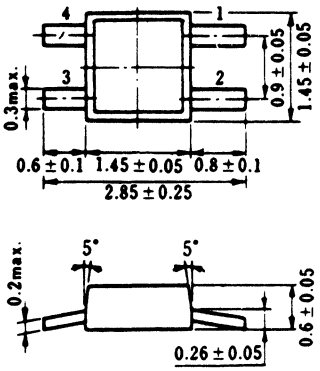

D24 Mini Type • 4 Pins with ⏊

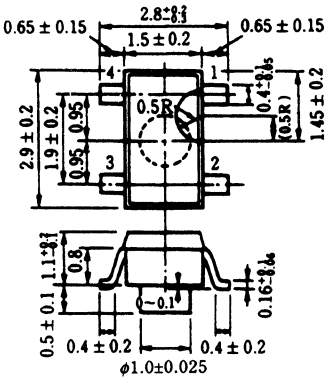

D25 Mini-Thin Type • 4 Pins with ⏊

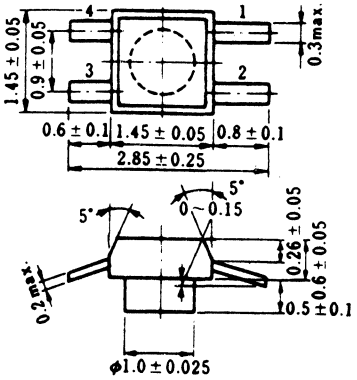

D26 DO-34

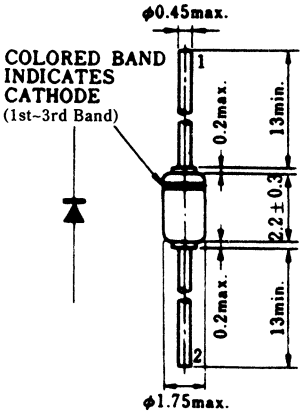

D27 DO-35 • Trigger

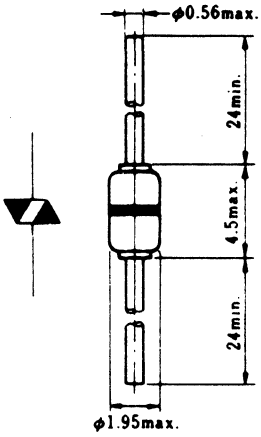

D28 DO-35

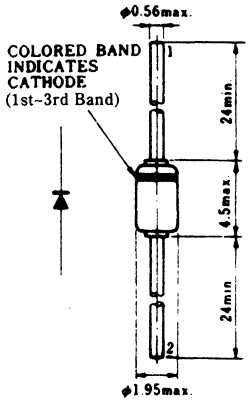

Package Outlines (Discrete Semiconductors)

Unit: mm

D29 DO-41

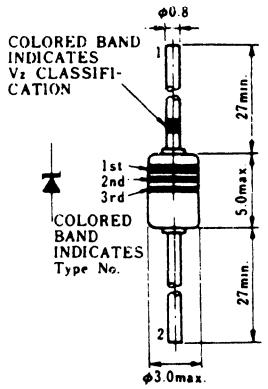

D30 Leadless

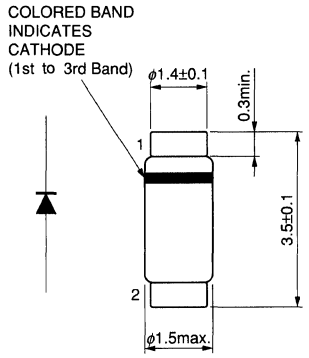

D34 New S Type

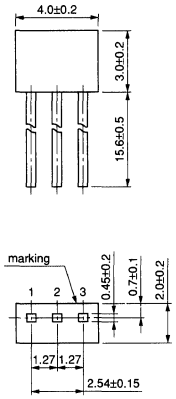

D35 M Type

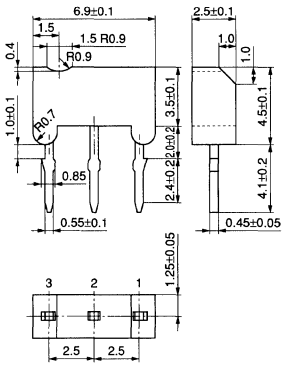

D36 U Type

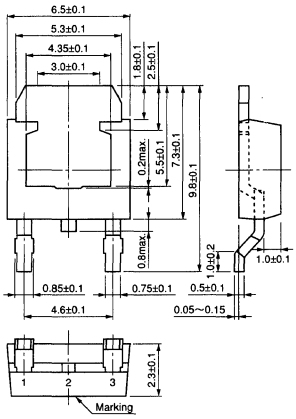

D37 MT1 Type

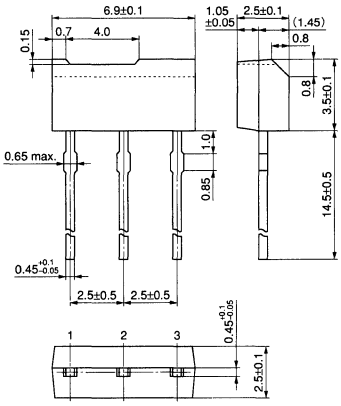

D38 MT2 Type

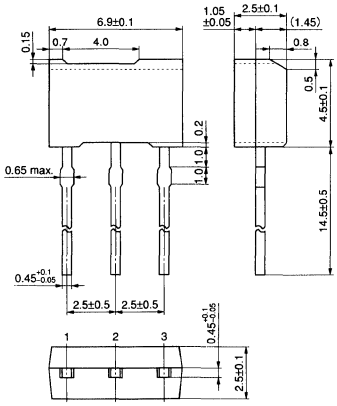

D40 MT3 Type

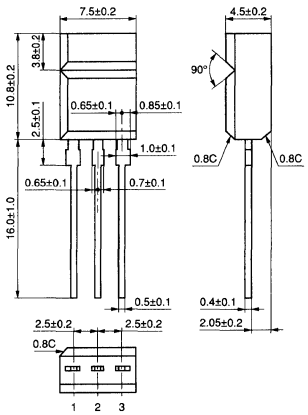

D41 MT4 Type

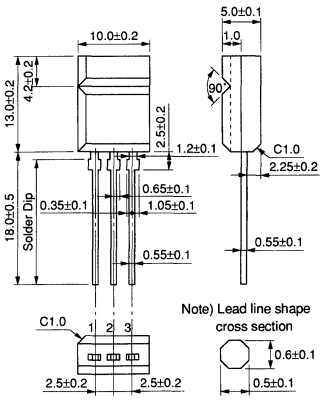

Package Outlines (Discrete Semiconductors)

Unit: mm

D42 N Type

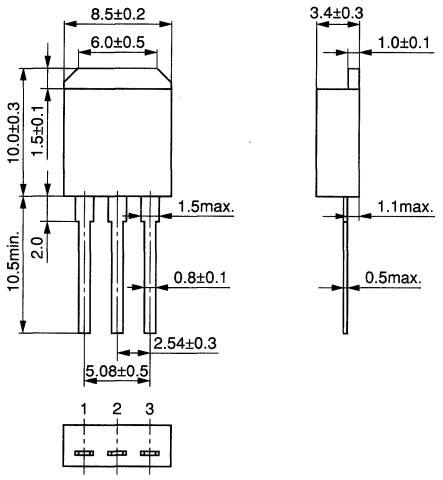

D43 N Type(DS)

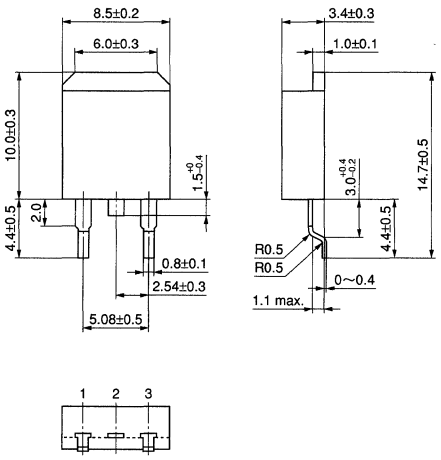

D44 I Type

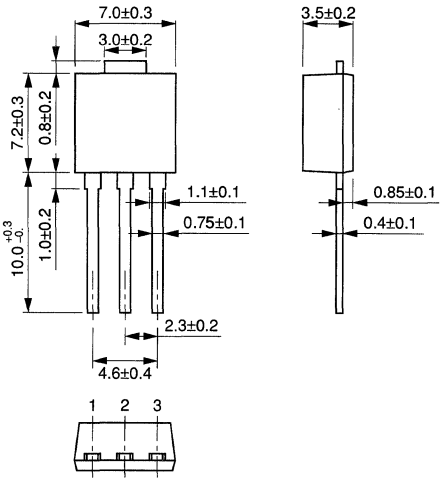

D45 I Type(Y)

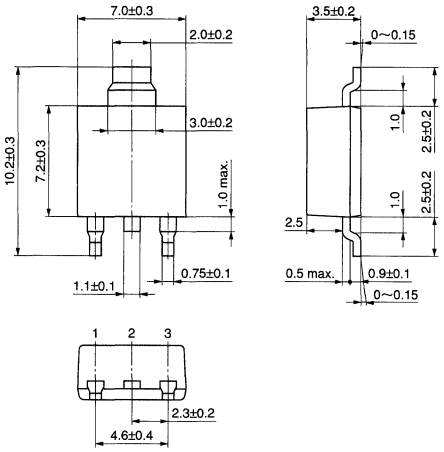

D46 TO-92 Type

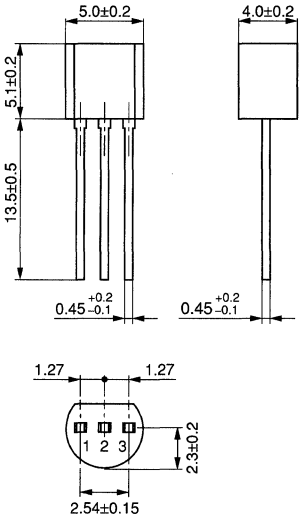

D47 TO-92L Type

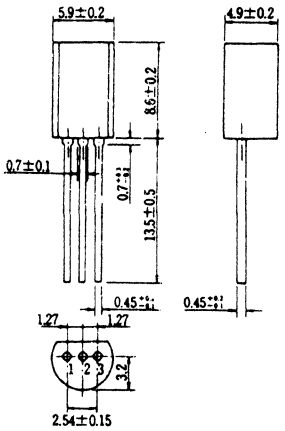

D48 TO-92NL Type

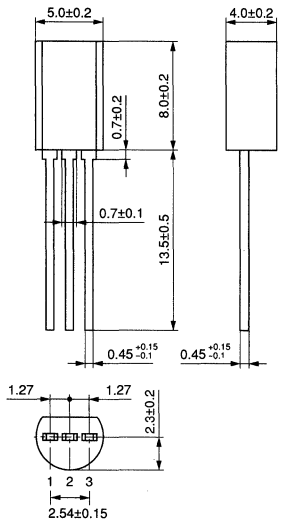

D49 TO-126(a) Type

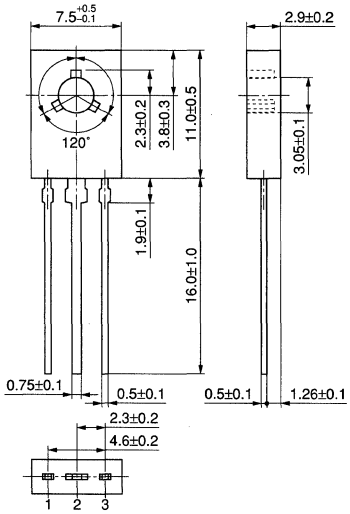

D50 TO-126(b) Type

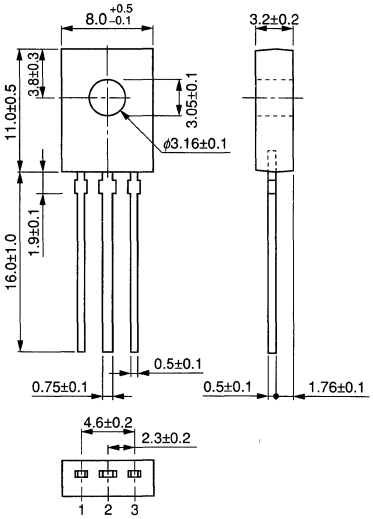

Package Outlines (Discrete Semiconductors)

Unit: mm

D51 TO-202 Type

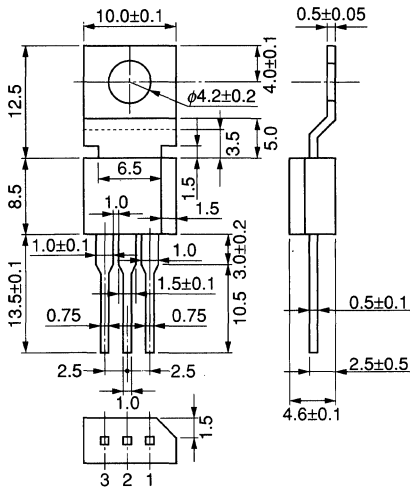

D52 TO-220(a) Type

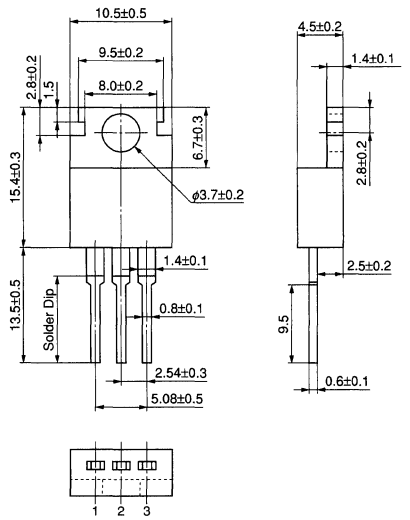

D53 TO-220(b) Type

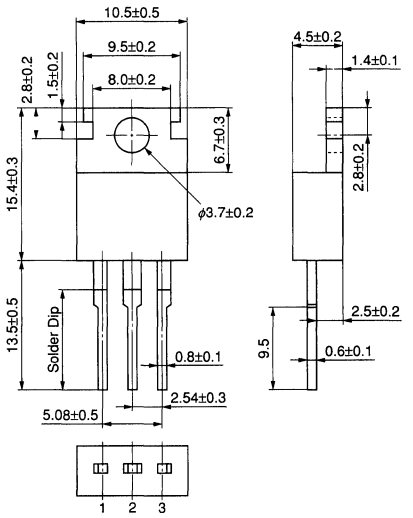

D54 TO-220(c) Type

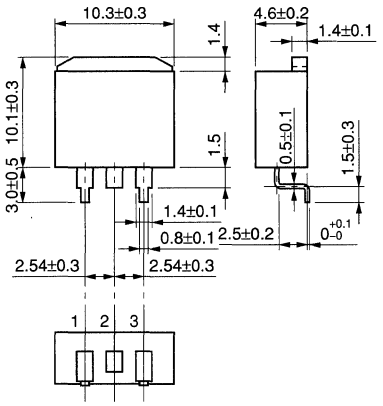

D55 TO-220F(a) Type

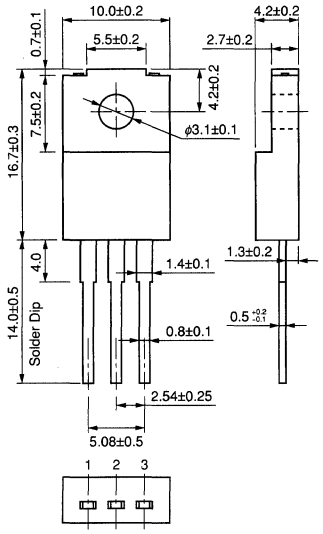

D56 TO-220F(b) Type

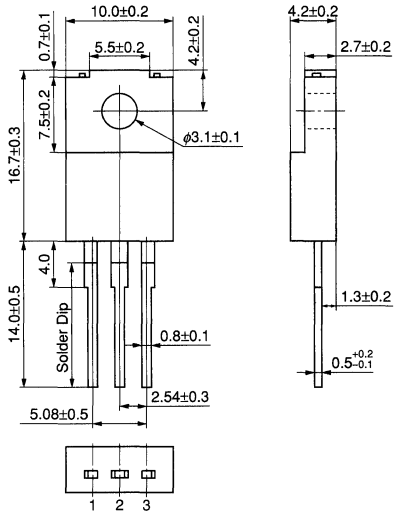

D57 TO-220F(c) Type

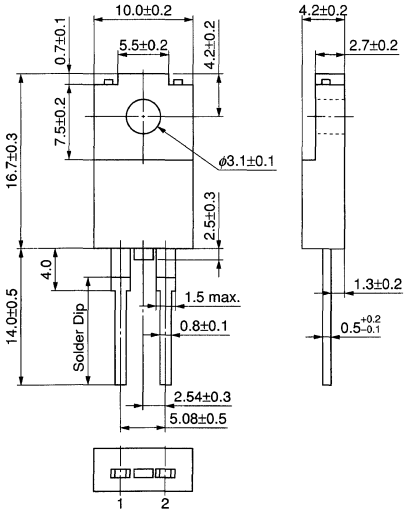

D58 TO-220D Type

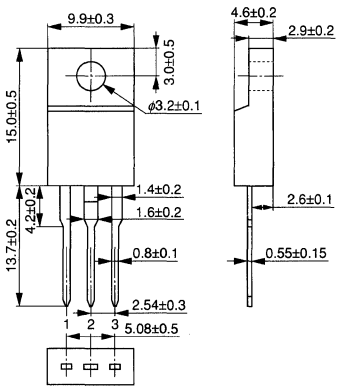

D59 TO-220E Type

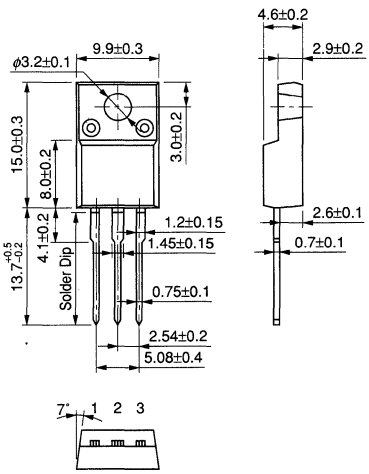

Package Outlines (Discrete Semiconductors)

Unit: mm

D60 TOP-3(a) Type

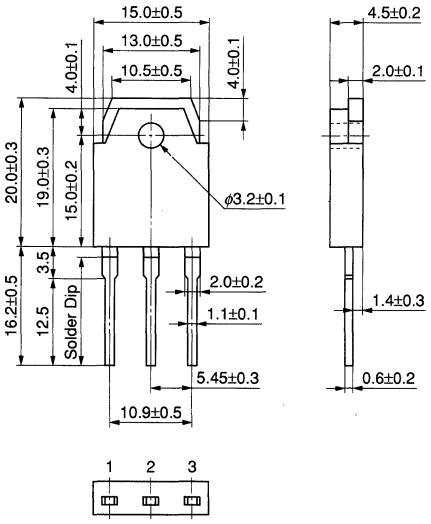

D61 TOP-3(b) Type

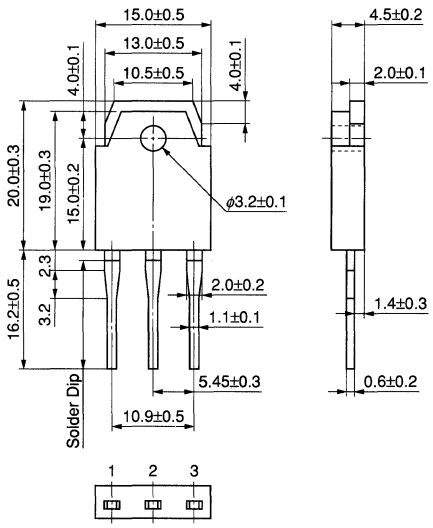

D62 TO-220D Type • 2 Pins

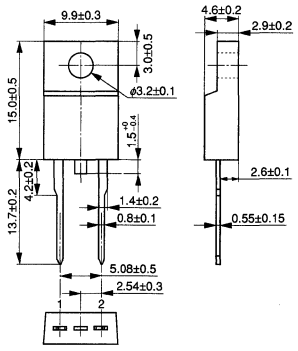

D63 TOP-3F(a) Type

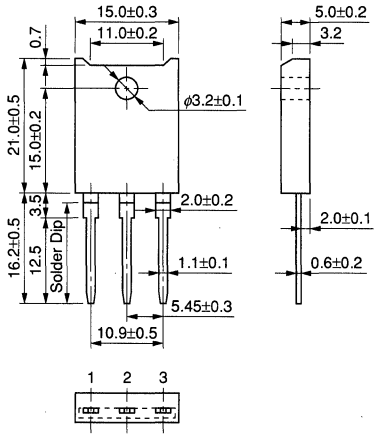

D64 TOP-3F(b) Type

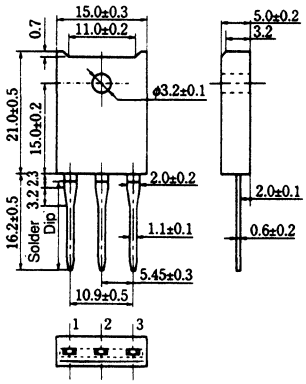

D65 TOP-3E Type

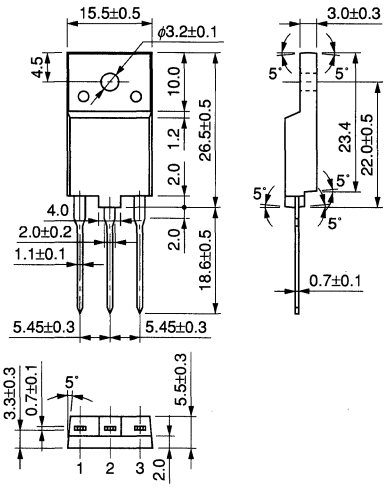

D66 TOP-3F(e) Type

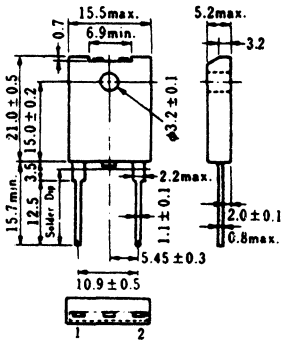

D67 TOP-3L Type

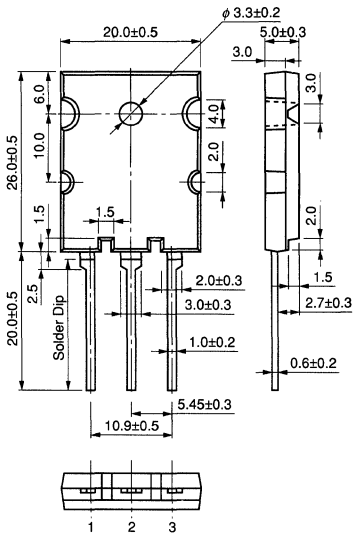

D68 SIL-8

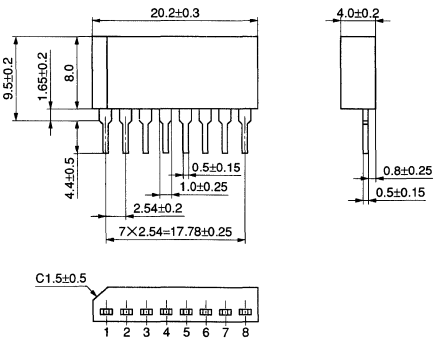

Package Outlines (Discrete Semiconductors)

Unit: mm

D69 SIL-8 (Special)

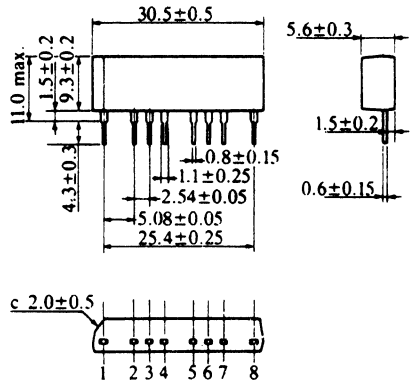

D70 SIL-10

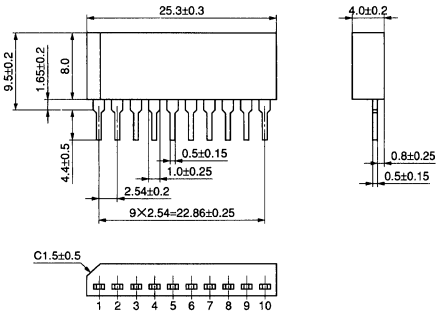

D71 SIL-12

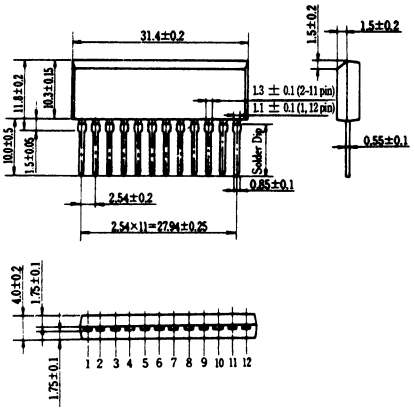

D72 DIL-8

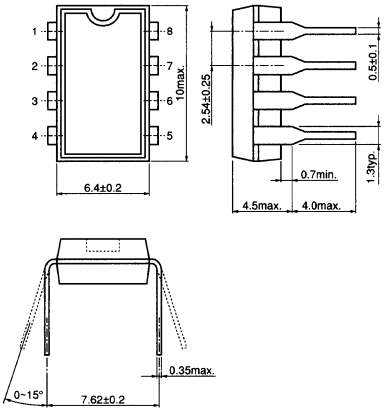

D73 SO-10A

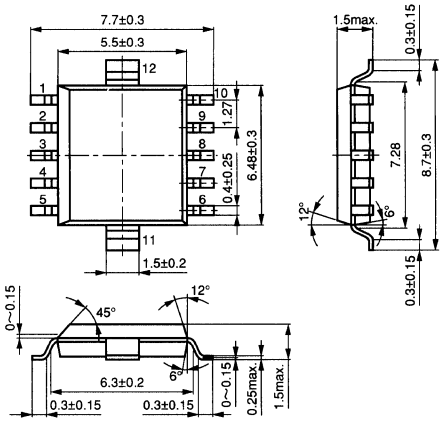

D74 SO-10C

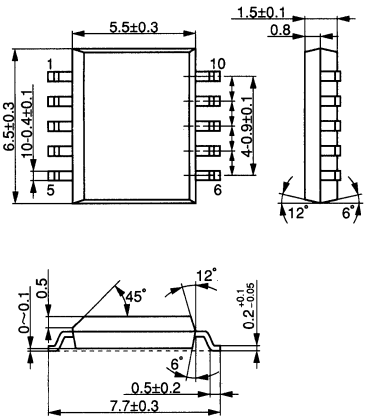

D75 SO-14

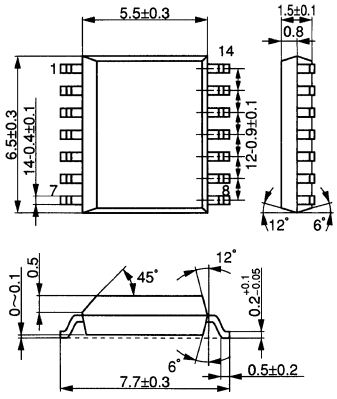

D76 SO-16

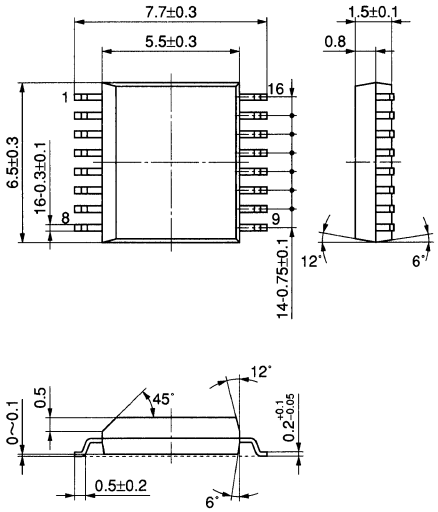

D77 S Type

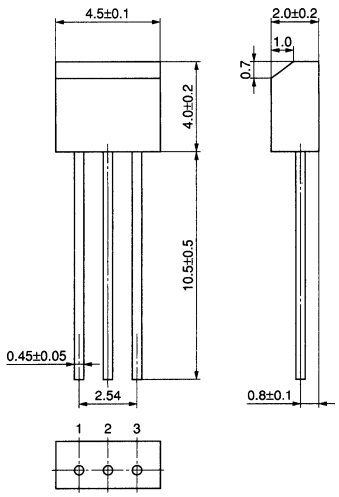

Package Outlines (Discrete Semiconductors)

Unit: mm

D78 SS-Mini Type • 2 Pins (Diode)

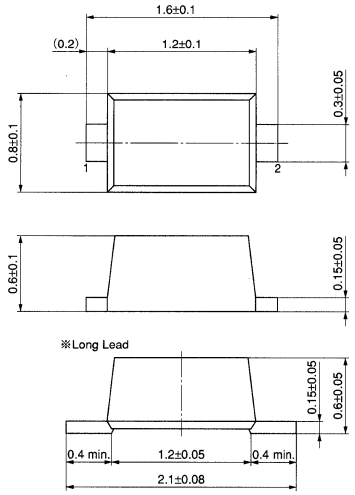

D79 SS-Mini Type • 2 Pins (Variable Capacitance)

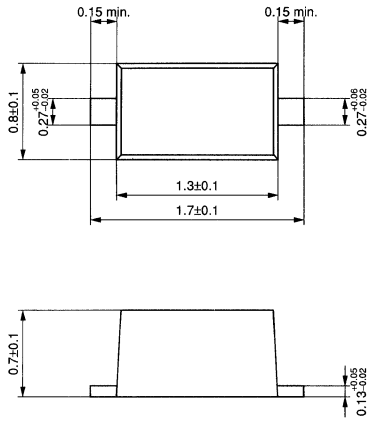

D80 Flat-Mini Type • 3 Pins

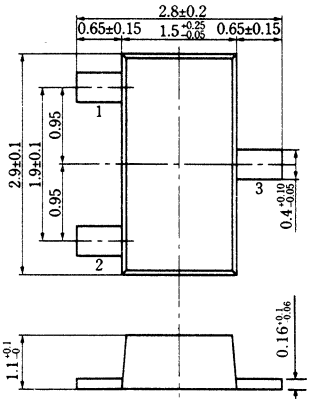

D81 SOP028-P-0375

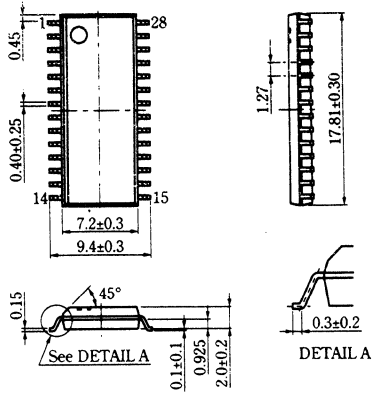

D82 HSOP024-P-0450

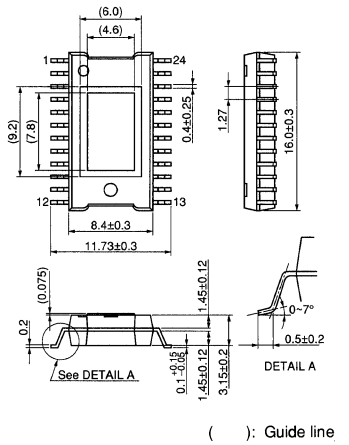

D84 SSOF-10D

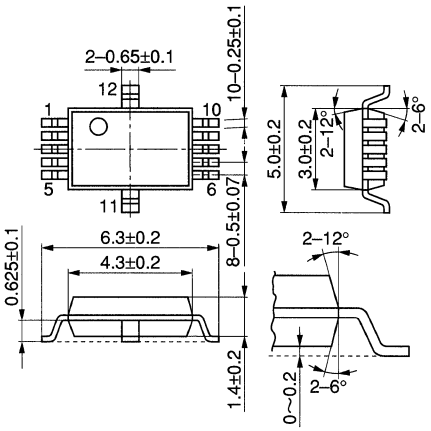

D85 SSONF-10D

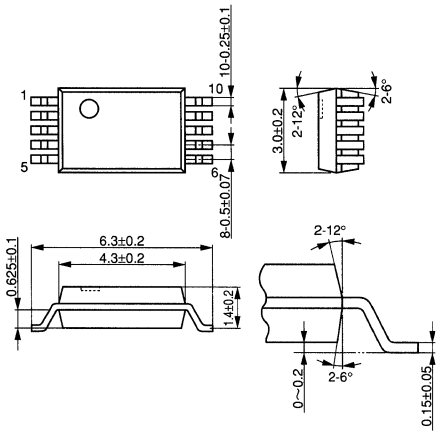

D86 Half New Mini-Power Type • 2 Pins

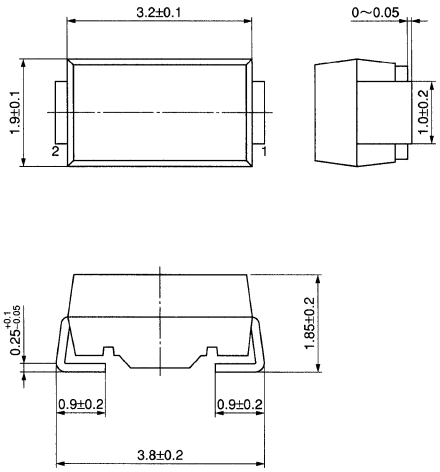

D87 PAM04-1

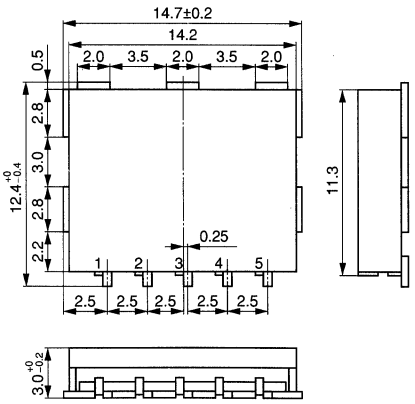

Package Outlines (Discrete Semiconductors)

Unit: mm

D88 SO-10D

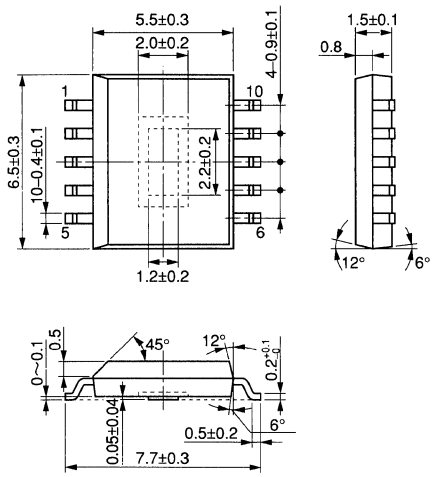

D89 PAM04-2

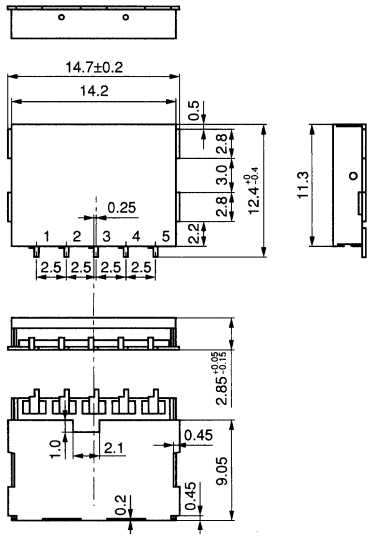

D90 PAM04-3

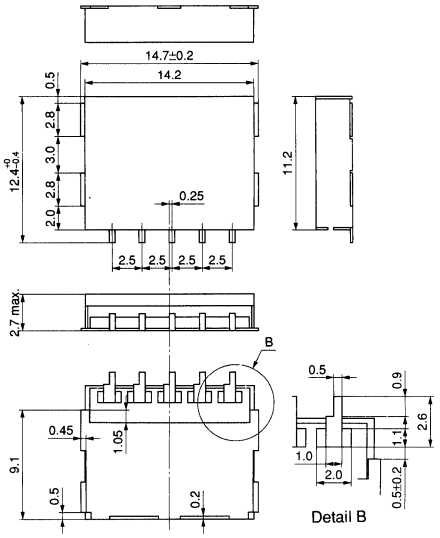

D91 PAM02-1

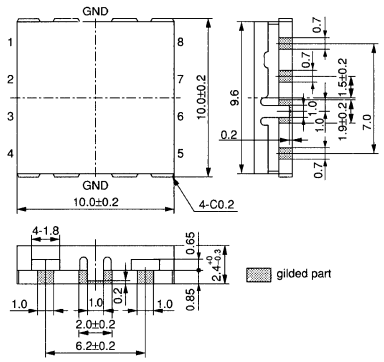

Maintenance and Discontinued Types

<Maintenance Types>

This product is not dealt with anymore.
Customers dealing with this product conventionally may contact our sales division in the case of ambiguity.

<Scrapped Types>

Apart from the inquiry concerning repair parts, we will refrain from taking any counteraction.

Maintenance Types

MOS LSIs

Type No.	Alternative	Type No.	Alternative	Type No.	Alternative	Type No.	Alternative	Type No.	Alternative
MN115P	–	MN1286	–	MN15312	–	MN158810	MN150814	MN231003A	–
MN116P	–	MN1287	–	MN1534	–	MN158819	–	MN231100	–
MN1201A	–	MN1288	–	MN15341	–	MN15882	–	MN23257	–
MN1201M	–	MN1290A	–	MN15361	–	MN158821	–	MN23258	–
MN1201S	–	MN1292	–	MN1542	–	MN158851	–	MN234000A	–
MN1202M	–	MN1293A	–	MN1544	–	MN158855	MN150813	MN234001H1	–
MN1204A	–	MN1293B	–	MN1550	–	MN158882	–	MN234002	–
MN1204B	–	MN12973	–	MN1551	–	MN15889	–	MN234002A	–
MN1204E	–	MN1297Z	–	MN15511	–	MN1613	–	MN234003	–
MN1204F	–	MN1297ZF	–	MN15512	–	MN170803	MN170803A	MN23403	–
MN1206A1	–	MN12C20	–	MN15513	–	MN17541	MN170401	MN238002	–
MN1212A	–	MN12C201D	–	MN15514	–	MN17581	MN170801	MN238003	–
MN1215	–	MN12C201DS	–	MN1551A	–	MN178122	MN171202	MN3001	–
MN1215P	–	MN12C201DSG	–	MN1551A3	–	MN178611	MN171603	MN3106	–
MN1215Q	–	MN12C201T	–	MN1552	–	MN1864002	MN1866405	MN31061	–
MN1215R	–	MN12C201TF	–	MN15522	MN155202	MN1864003	MN1866406	MN3106S	–
MN1215S	–	MN12C20F	–	MN155221	–	MN1870820	–	MN3107CS	–
MN1215T	–	MN12C25	–	MN1554	–	MN1870822	–	MN3108S	–
MN1217A	–	MN12C25C	–	MN15542	–	MN187123	–	MN3109	–
MN1217E	–	MN12C25D	–	MN15543	–	MN187125	MN187124	MN3109S	–
MN1218A	–	MN12C25DW	–	MN1564	–	MN187129	MN187124	MN31121SA	–
MN1219	–	MN12C261D	–	MN157451	–	MN1871616	MN1872423	MN3801	–
MN1219S	–	MN12C261DS	–	MN15811	–	MN1871620	–	MN3801S	–
MN1220	–	MN12C28	–	MN15813	–	MN1871622	–	MN3802A	–
MN12201	–	MN12C28ND	–	MN15814	–	MN1871625	–	MN3802AS	–
MN1220S	–	MN12C35	–	MN15816	–	MN1871641	–	MN3803	–
MN1220T	–	MN12C401	–	MN15820	–	MN187167	–	MN3810K	–
MN1220Z	–	MN1400	–	MN15828	–	MN1872416	MN1872423	MN3810S	–
MN1221	–	MN14001	–	MN15829	–	MN1873216	MN1873223	MN3811K	–
MN1222C	–	MN1401	–	MN158341	MN158412	MN18761	–	MN3811S	–
MN12231C	–	MN1402	–	MN15834A	MN158412	MN18788	–	MN3815	–
MN1223C	–	MN14021	–	MN15835	–	MN18788A	–	MN3815S	–
MN1224	–	MN14022	–	MN15837	–	MN18801A	–	MN3817S	–
MN1224S	–	MN1403	–	MN15838	–	MN18804A	–	MN3818S	–
MN1225	–	MN14131	–	MN15839	–	MN1880823	MN1884824	MN3819S	–
MN1225S	–	MN14132	–	MN15841	–	MN188161A	–	MN3820S	–
MN1225Z	–	MN14133	–	MN158412	–	MN188163	–	MN3821S	–
MN1226	–	MN14134	–	MN158413	MN158413A	MN1882410	–	MN3822	–
MN12261	–	MN1414	–	MN158415	–	MN1882413	–	MN38221S	–
MN1227B	–	MN14161	–	MN158416	–	MN1883213	–	MN3823S	–
MN1227BS	–	MN1417	–	MN158417	MN150414	MN188322	–	MN3824S	–
MN1228	–	MN1427	–	MN158418	–	MN18841	–	MN3827S	–
MN1228T	–	MN1430	–	MN15842	–	MN188412	–	MN3828S	–
MN1231	–	MN1435	–	MN15843	–	MN18881	–	MN3850S	–
MN1237A	–	MN1443	–	MN15845	–	MN188815	–	MN3850SG	–
MN1237AD	–	MN1451	–	MN158451	–	MN188816	–	MN3851MS	–
MN1238C	–	MN1453A	–	MN158452	MN1584532	MN18884	–	MN3857S	–
MN1238D	–	MN1454	–	MN158453	–	MN18885	–	MN3861SA	–
MN1238G	–	MN14551	–	MN1584531	MN150413	MN18888	–	MN3862SA	–
MN1250BJC	–	MN1455A	–	MN1584532	MN150413	MN18982	–	MN3864SA	–
MN1252A	–	MN1455B	–	MN158455	–	MN18P64802	MN18P66405	MN4001B	–
MN1252B	–	MN1456	–	MN158481	–	MN18P73216	MN18P76423	MN4001BS	–
MN1257A	–	MN14823	–	MN158482	–	MN18P73222	–	MN4006B	–
MN1257E	–	MN14835	–	MN158483	–	MN18P8161	–	MN4006BS	–
MN1257G	–	MN14838	–	MN158486	–	MN1901	–	MN4007UB	–
MN1267PH	–	MN14841	–	MN15849	–	MN19011	–	MN4007UBS	–
MN1271	–	MN1498	–	MN158491	–	MN1902	–	MN40098B	–
MN1271F	–	MN15142	–	MN158492	–	MN19041	–	MN40098BS	–
MN1271FA	–	MN15142A	–	MN158493	–	MN1909	–	MN4011B	–
MN1275A	–	MN15224	–	MN158614	–	MN19091	–	MN4011BS	–
MN1276	–	MN15225	–	MN15862	–	MN1911	–	MN4013B	–
MN1277B	–	MN15226	–	MN15863	–	MN191201	–	MN4013BS	–
MN1277D	–	MN15246	–	MN158631	–	MN1921003	–	MN4014B	–
MN1280	MN1380	MN152481	–	MN15864	–	MN19841	–	MN4014BS	–
MN12801	–	MN15261	–	MN15865	–	MN199001	–	MN4015B	–
MN1281	MN1381	MN15263	–	MN158655	MN150813	MN231001T	–	MN4015BS	–
MN12811	MN13811	MN1527	–	MN15866	–	MN231001T1	–	MN4016B	–
MN1282	–	MN15283	–	MN15867	–	MN231002	–	MN4016BS	–
MN12821	MN13821	MN15311	–	MN158682	–	MN231002A	–	MN40174B	–

Note) Alternative product is, almost alike in characteristics and function, not same in all respects. Please examine the content when you use.

● MOS LSIs (continued)

Type No.	Alternative	Type No.	Alternative	Type No.	Alternative	Type No.	Alternative	Type No.	Alternative
MN40174BS	–	MN4076BS	–	MN52020	–	MN6091	–	MN62602	–
MN40175B	–	MN4077B	–	MN52040	–	MN6092	–	MN62603	–
MN40175BS	–	MN4077BS	–	MN52080	–	MN6093	–	MN6260B	–
MN4017B	–	MN4078B	–	MN52100	–	MN6094	–	MN6260C	–
MN4017BS	–	MN4078BS	–	MN53003	–	MN6102	–	MN6260CSG	–
MN4018B	–	MN4081B	–	MN53005	–	MN6104	–	MN6261	–
MN4018BS	–	MN4081BS	–	MN53007	–	MN6104FA	–	MN6268	–
MN4019B	–	MN4082B	–	MN53010	–	MN6105	–	MN62681	–
MN4019BS	–	MN4082BS	–	MN53015	–	MN6105S	–	MN6269	–
MN4020B	–	MN4085B	–	MN53020	–	MN6106A	–	MN6271	–
MN4020BS	–	MN4085BS	–	MN53030	–	MN61081	–	MN6272	–
MN4021B	–	MN4093B	–	MN53040	–	MN61082	–	MN6275A	–
MN4021BS	–	MN4093BS	–	MN53060	–	MN61115	–	MN6276A	–
MN4022B	–	MN4094B	–	MN53080	–	MN6117A	–	MN6277	–
MN4022BS	–	MN4094BS	–	MN53100	–	MN61212	–	MN6282S	–
MN4023B	–	MN4503B	–	MN53150	–	MN61212A	–	MN6283	–
MN4023BS	–	MN4503BS	–	MN53200	–	MN61213	–	MN6284	–
MN4024B	–	MN4510B	–	MN55020	–	MN6124	–	MN6287S	–
MN4024BS	–	MN4510BS	–	MN55040	–	MN6126	–	MN6290	–
MN4025B	–	MN4511B	–	MN5604	–	MN6126FA	–	MN6291	–
MN4025BS	–	MN4511BS	–	MN56100	–	MN6127A	–	MN6291A	–
MN4027B	–	MN4512B	–	MN56150	–	MN6127F	–	MN6320	–
MN4027BS	–	MN4512BS	–	MN56200	–	MN6128	–	MN6330	–
MN4028B	–	MN4514B	–	MN56250	–	MN6128S	–	MN6405	–
MN4028BS	–	MN4514BS	–	MN56300	–	MN612AS	–	MN6411	–
MN4029B	–	MN4515B	–	MN56A04	–	MN6130	–	MN6411B	–
MN4029BS	–	MN4515BS	–	MN56A07	–	MN6131A	–	MN6460	MN6460A
MN4030B	–	MN4516B	–	MN56A12	–	MN6132AA	–	MN64730	–
MN4030BS	–	MN4516BS	–	MN56A18	–	MN6135S	–	MN64731	–
MN4040B	–	MN4517B	–	MN59020	–	MN6137	–	MN6474	MN6474A
MN4040BS	–	MN4518B	–	MN59040	–	MN6139	–	MN64751	MN647511
MN4041B	–	MN4518BS	–	MN59080	–	MN6147	–	MN6514	–
MN4041BS	–	MN4520B	–	MN59100	–	MN6147C	–	MN6514S	–
MN4042B	–	MN4520BS	–	MN59150	–	MN6148	–	MN6515	–
MN4042BS	–	MN4521B	–	MN6010	–	MN6163	–	MN6516S	–
MN4043B	–	MN4521BS	–	MN6010K	–	MN6163A	–	MN6520	–
MN4043BS	–	MN4522B	–	MN60111K	–	MN6163AS	–	MN6540	–
MN4044B	–	MN4522BS	–	MN6011K	–	MN6165	–	MN6540S	–
MN4044BS	–	MN4526B	–	MN6013AS	–	MN6170AS	–	MN6558	–
MN4046B	–	MN4526BS	–	MN6013C	–	MN6172ABS	–	MN6560FS	–
MN4046BS	–	MN4528B	–	MN6013ES	–	MN6173	–	MN6561FS	–
MN4047B	–	MN4528BS	–	MN6013H	–	MN6173S	–	MN6562	–
MN4047BS	–	MN4532B	–	MN6013L	–	MN6182	–	MN6601	–
MN4049B	–	MN4532BS	–	MN6013P	–	MN6188P	–	MN6616	–
MN4049BS	–	MN4538B	–	MN6013PQ	–	MN6188PS	–	MN6631A	–
MN4050B	–	MN4538BS	–	MN6014	–	MN6189	–	MN6633	–
MN4050BS	–	MN4539B	–	MN6014S	–	MN6192	–	MN6634	–
MN4051B	–	MN4539BS	–	MN6016	–	MN6194	–	MN6636	–
MN4051BS	–	MN4541B	–	MN6016K	–	MN6220	–	MN6704A	–
MN4052B	–	MN4541BS	–	MN6016KS	–	MN6221AA	–	MN6740	–
MN4052BS	–	MN4543B	–	NN6017	–	MN6221AB	–	MN6742	–
MN4053B	–	MN4543BS	–	MN6017K	–	MN6221AC	–	MN6745	–
MN4053BS	–	MN4556B	–	MN6017KS	–	MN6221BC	–	MN6746	MN67461
MN4060B	–	MN4556BS	–	MN6021	–	MN6221CC	–	MN67512	–
MN4060BS	–	MN4584B	–	MN6025B	–	MN6221CD	–	MN675121	–
MN4066B	–	MN4584BS	–	MN6025D	–	MN6221CF	–	MN67520	–
MN4066BS	–	MN4585B	–	MN6025E	–	MN6221CI	–	MN675201	–
MN4068B	–	MN4585BS	–	MN6032	–	MN6221D	–	MN675201A	–
MN4068BS	–	MN4720B	–	MN6034	–	MN6221DD	–	MN675283	–
MN4069UB	–	MN50003	–	MN6035A	–	MN6221DG	–	MN675325	–
MN4069UBS	–	MN50007	–	MN6036HB	–	MN6221TA	–	MN6755241	–
MN4070B	–	MN50010	–	MN6040	–	MN6222BB	–	MN6755242	–
MN4070BS	–	MN50015	–	MN6040A	–	MN6223BA	–	MN67601NS	–
MN4071B	–	MN50020	–	MN6040Z	–	MN62251BW	–	MN676021PDS	–
MN4071BS	–	MN50030	–	MN6049	–	MN6225S	–	MN676021PPS	–
MN4072B	–	MN51005	–	MN6057	–	MN6227	–	MN67602PS	–
MN4072BS	–	MN51007	–	MN6063	–	MN6228S	–	MN67604PS	–
MN4073B	–	MN51010	–	MN6064	–	MN6252	–	MN67605AN	–
MN4073BS	–	MN51015	–	MN6064R	–	MN6253B	–	MN67606AP	–
MN4075B	–	MN51020	–	MN6064RS	–	MN6253BS	–	MN67607NAS	–
MN4075BS	–	MN51030	–	MN6067	–	MN6255	–	MN6780	–
MN4076B	–	MN512K	–	MN6076	–	MN62601	–	MN67801	–

Note) Alternative product is, almost alike in characteristics and function, not same in all respects. Please examine the content when you use.

● MOS LSIs (continued)

Type No.	Alternative	Type No.	Alternative	Type No.	Alternative	Type No.	Alternative	Type No.	Alternative
MN67802	–	MN74HC160S	–	MN74HC280S	–	MN74HC42	–	MN74HCT280	–
MN67803	–	MN74HC161	–	MN74HC30	–	MN74HC42S	–	MN74HCT280S	–
MN6781	–	MN74HC161S	–	MN74HC30S	–	MN74HC4301	–	MN74HCT3772	–
MN6802P	–	MN74HC162	–	MN74HC32	–	MN74HC4301S	–	MN74HCT3772S	–
MN6840C	–	MN74HC162S	–	MN74HC32S	–	MN74HC4302	–	MN74HCT40104	–
MN70000	–	MN74HC163	–	MN74HC352	–	MN74HC4302S	–	MN74HCT40104S	–
MN71000	–	MN74HC163S	–	MN74HC352S	–	MN74HC4303	–	MN74HCT4051A	–
MN72000	–	MN74HC164	–	MN74HC353	–	MN74HC4303S	–	MN74HCT4051AS	–
MN7202	–	MN74HC164S	–	MN74HC353S	–	MN74HC4304	–	MN74HCT4052A	–
MN7202M	–	MN74HC165	–	MN74HC365	–	MN74HC4304S	–	MN74HCT4052AS	–
MN73000	–	MN74HC165S	–	MN74HC365S	–	MN74HC4305	–	MN74HCT4053A	–
MN74HC00	–	MN74HC166	–	MN74HC366	–	MN74HC4305S	–	MN74HCT4053AS	–
MN74HC00S	–	MN74HC166S	–	MN74HC366S	–	MN74HC4306	–	MN74HCT4060	–
MN74HC02	–	MN74HC173	–	MN74HC367	–	MN74HC4306S	–	MN74HCT4060S	–
MN74HC02S	–	MN74HC174	–	MN74HC367S	–	MN74HC4520	–	MN74HCT4538	–
MN74HC03	–	MN74HC174S	–	MN74HC368	–	MN74HC4538	–	MN74HCT4538S	–
MN74HC03S	–	MN74HC175	–	MN74HC368S	–	MN74HC4538S	–	MN74HCT563	–
MN74HC04	–	MN74HC175S	–	MN74HC372	–	MN74HC51	–	MN74HCT563S	–
MN74HC04S	–	MN74HC183	–	MN74HC372S	–	MN74HC51S	–	MN74HCT564	–
MN74HC08	–	MN74HC183S	–	MN74HC374	–	MN74HC533	–	MN74HCT564S	–
MN74HC08S	–	MN74HC194	–	MN74HC374S	–	MN74HC533S	–	MN74HCT573	–
MN74HC10	–	MN74HC194S	–	MN74HC375	–	MN74HC534	–	MN74HCT573S	–
MN74HC107	–	MN74HC195	–	MN74HC375S	–	MN74HC534S	–	MN74HCT574	–
MN74HC109	–	MN74HC195S	–	MN74HC377	–	MN74HC540	–	MN74HCT574S	–
MN74HC109S	–	MN74HC20	–	MN74HC377S	–	MN74HC540S	–	MN74HCU04	–
MN74HC10S	–	MN74HC20S	–	MN74HC386	–	MN74HC541	–	MN74HCU04S	–
MN74HC11	–	MN74HC21	–	MN74HC386S	–	MN74HC541S	–	MN8025	–
MN74HC112	–	MN74HC21S	–	MN74HC390	–	MN74HC563	–	MN8029	–
MN74HC112S	–	MN74HC221	–	MN74HC390S	–	MN74HC563S	–	MN8029LS	–
MN74HC11S	–	MN74HC221S	–	MN74HC393	–	MN74HC564	–	MN8029S	–
MN74HC123	–	MN74HC237	–	MN74HC393S	–	MN74HC564S	–	MN8033	–
MN74HC123S	–	MN74HC237S	–	MN74HC4002	–	MN74HC573	–	MN8037	–
MN74HC125	–	MN74HC238	–	MN74HC4002S	–	MN74HC573S	–	MN8037LS	–
MN74HC125S	–	MN74HC238S	–	MN74HC40104	–	MN74HC574	–	MN8037SD	–
MN74HC126	–	MN74HC240	–	MN74HC40104S	–	MN74HC574S	–	MN8040	–
MN74HC126S	–	MN74HC240S	–	MN74HC4015	–	MN74HC640	–	MN80C51	–
MN74HC132	–	MN74HC241	–	MN74HC4015S	–	MN74HC640S	–	MN83021	–
MN74HC132S	–	MN74HC241S	–	MN74HC4020	–	MN74HC643	–	MN8351	–
MN74HC133	–	MN74HC242	–	MN74HC4020S	–	MN74HC643S	–	MN83801A	–
MN74HC133S	–	MN74HC242S	–	MN74HC4024	–	MN74HC688	–	MN83802A	–
MN74HC137	–	MN74HC243	–	MN74HC4024S	–	MN74HC688S	–	MN8380S	–
MN74HC137S	–	MN74HC243S	–	MN74HC4040	–	MN74HC73	–	MN83851	–
MN74HC138	–	MN74HC244	–	MN74HC4040S	–	MN74HC73S	–	MN84C640	–
MN74HC138S	–	MN74HC244S	–	MN74HC4049	–	MN74HC74	–	MN8580A	–
MN74HC139	–	MN74HC245	–	MN74HC4049S	–	MN74HC74S	–	MN8581	–
MN74HC139S	–	MN74HC245S	–	MN74HC4050	–	MN74HC75	–	MN8611A	–
MN74HC14	–	MN74HC251	–	MN74HC4050S	–	MN74HC75S	–	MN8615	–
MN74HC147	–	MN74HC251S	–	MN74HC4051A	–	MN74HC76	–	MN8615A	–
MN74HC147S	–	MN74HC253	–	MN74HC4051AS	–	MN74HC76S	–	MN86162	–
MN74HC148	–	MN74HC253S	–	MN74HC4052A	–	MN74HC77	–	MN86164	–
MN74HC14S	–	MN74HC257	–	MN74HC4052AS	–	MN74HC77S	–	MN8617	–
MN74HC151	–	MN74HC257S	–	MN74HC4053A	–	MN74HC86	–	MN8617A	–
MN74HC151S	–	MN74HC258	–	MN74HC4053AS	–	MN74HC86S	–	MN8617AP	–
MN74HC153	–	MN74HC258S	–	MN74HC4060C	–	MN74HCT04	–	MN8617B	–
MN74HC155	–	MN74HC266	–	MN74HC4060CS	–	MN74HCT04S	–	MN8620	–
MN74HC155S	–	MN74HC266S	–	MN74HC4066	–	MN74HCT123	–	MN8660AP	–
MN74HC157	–	MN74HC27	–	MN74HC4066S	–	MN74HCT123S	–	MN8671P	–
MN74HC157S	–	MN74HC273	–	MN74HC4075	–	MN74HCT166	–	MN8810	–
MN74HC158	–	MN74HC273S	–	MN74HC4075S	–	MN74HCT166S	–	MN88802	–
MN74HC158S	–	MN74HC27S	–	MN74HC4078	–	MN74HCT238	–		
MN74HC160	–	MN74HC280	–	MN74HC4078S	–	MN74HCT238S	–		

● MOS CCDs

Type No.	Alternative	Type No.	Alternative	Type No.	Alternative	Type No.	Alternative	Type No.	Alternative
MN3643D	MN3644D	MN3656	–	MN3720AC	–	MN3731SK	–	MN8027	MN3610
MN3648	MN3610H	MN3661	MN3615	MN3723FE	MN3723CFE	MN3741F	–	MN8051A	MN3644D
MN3649	MN3610H	MN3713FE	MN3713CFE	MN3725F/AC	MN3726MFE/MAE	MN3741SK	–	MN8061A	MN3615
MN3651D	MN3610	MN3715F/AC	MN3716MFE/MAE	MN3726AC	MN3726MAE	MN3735AC	–	MN8090	MN3644D
MN3655A3-V	–	MN3716AC	MN3716MAE	MN3731F	–	MN3745AC	–		

Note) Alternative product is, almost alike in characteristics and function, not same in all respects. Please examine the content when you use.

Maintenance Types

● MOS Memories

Type No.	Alternative	Type No.	Alternative	Type No.	Alternative	Type No.	Alternative	Type No.	Alternative
MN27C256	—	MN414170SJ	MN414170CSJ	MN4118160ATT	—	MN424400BSJ	MN424400CSJ	MN4701F	—
MN27C64	—	MN414260SJ	MN414260CSJ	MN4217400ASJ	—	MN424400BTT	MN424400CTT	MN4701K	—
MN41256AJ	—	MN414270SJ	MN414270CSJ	MN4217400ATT	—	MN4416C	—	MN4701S	—
MN41464A	—	MN414400AL	—	MN4216160ASJ	—	MN4416S	—	MN47C401FS	—
MN41464AJ	—	MN414400BL	—	MN4216160ATT	—	MN44256	—	MN4760S	—
MN41464AZ	—	MN414400ASJ	MN414400CSJ	MN41V17400ATT	—	MN44256S	—	MN4780AK	—
MN41C1000AL	—	MN414400ATT	MN414400CTT	MN42V17400ATT	—	MN44256T	—	MN4712F	—
MN41C1000ASJ	—	MN414400BSJ	MN414400CSJ	MN424100AL	—	MN4464	—	MN4713F	—
MN41C1002AL	—	MN414400BTT	MN414400CTT	MN424100BL	—	MN4464M	—	MN4771S	MN4775AS
MN41C4256AL	—	MN4116400ATT	—	MN424100ASJ	MN424100BSJ	MN4464S	—	MN4772S	MN4776AS
MN41C4256ASJ	—	MN4117400ASJ	—	MN424100ATT	MN424100BTT	MN4464T	—	MN4703FS	MN4703AFS
MN41C4258AL	—	MN4117400ATT	—	MN424170SJ	MN424170CSJ	MN47464L	—	MN4710F	—
MN414100AL	—	MN4117405ASJ	—	MN424260SJ	MN424260CSJ	MN4700	—	MN4711F	—
MN414100BL	—	MN4117405ATT	—	MN424400AL	—	MN4700F	—	MN4774S	MN4778AS
MN414100ASJ	—	MN4116160ASJ	—	MN424400BL	—	MN4700K	—	MN4777S	MN4777AS
MN414100BSJ	—	MN4116160ATT	—	MN424400ASJ	MN424400CSJ	MN4700S	—	MN4791S	—
MN414100ATT	MN414100BTT	MN4118160ASJ	—	MN424400ATT	MN424400CTT	MN4701	—	MN6111	—

● Bipolar Digital ICs

Type No.	Alternative	Type No.	Alternative	Type No.	Alternative	Type No.	Alternative	Type No.	Alternative
DN811	—	DN74LS16-1/S	—	DN74LS93/S	—	DN74LS164/S	—	DN74LS279/S	—
DN819	—	DN74LS17-1/S	—	DN74LS95B/S	—	DN74LS165/S	—	DN74LS280/S	—
DN834	DN6845S/6852	DN74LS20/S	—	DN74LS96/S	—	DN74LS166/S	—	DN74LS283/S	—
DN835	—	DN74LS21/S	—	DN74LS107A/S	—	DN74LS170/S	—	DN74LS290/S	—
DN837	DN6845S/6852	DN74LS22/S	—	DN74LS109/S	—	DN74LS173/S	—	DN74LS293/S	—
DN838	DN6844S/6851	DN74LS26/S	—	DN74LS112A/S	—	DN74LS174/S	—	DN74LS298/S	—
DN839	DN6845S/6852	DN74LS27/S	—	DN74LS113A/S	—	DN74LS175/S	—	DN74LS363/S	—
DN850	—	DN74LS28/S	—	DN74LS114A/S	—	DN74LS181/S	—	DN74LS364/S	—
DN851	—	DN74LS30/S	—	DN74LS123/S	—	DN74LS191/S	—	DN74LS365A/S	—
DN852/P	—	DN74LS32/S	—	DN74LS125A/S	—	DN74LS192/S	—	DN74LS366A/S	—
DN6835	—	DN74LS33/S	—	DN74LS126A/S	—	DN74LS193/S	—	DN74LS367A/S	—
DN6844	DN6844S/6851	DN74LS37/S	—	DN74LS132/S	—	DN74LS195A/S	—	DN74LS368A/S	—
DN6845	DN6845S/6852	DN74LS38/S	—	DN74LS136/S	—	DN74LS197/S	—	DN74LS373/S	—
DN6846	DN6846S/6853	DN74LS38-1/S	—	DN74LS138/S	—	DN74LS221/S	—	DN74LS374/S	—
DN74LS00/S	—	DN74LS42/S	—	DN74LS139/S	—	DN74LS240/S	—	DN74LS375/S	—
DN74LS01/S	—	DN74LS51/S	—	DN74LS145/S	—	DN74LS241/S	—	DN74LS377/S	—
DN74LS02/S	—	DN74LS54/S	—	DN74LS148/S	—	DN74LS242/S	—	DN74LS378/S	—
DN74LS03/S	—	DN74LS55/S	—	DN74LS151/S	—	DN74LS243/S	—	DN74LS386/S	—
DN74LS04/S	—	DN74LS73A/S	—	DN74LS153/S	—	DN74LS244/S	—	DN74LS390/S	—
DN74LS05/S	—	DN74LS74A/S	—	DN74LS154/S	—	DN74LS245/S	—	DN74LS393/S	—
DN74LS08/S	—	DN74LS75/S	—	DN74LS155/S	—	DN74LS251/S	—	DN74LS540/S	—
DN74LS09/S	—	DN74LS76A/S	—	DN74LS156/S	—	DN74LS253/S	—	DN74LS541/S	—
DN74LS10/S	—	DN74LS78A/S	—	DN74LS157/S	—	DN74LS257A/S	—	DN74LS640/S	—
DN74LS11/S	—	DN74LS83A/S	—	DN74LS158/S	—	DN74LS258A/S	—	DN8505	—
DN74LS12/S	—	DN74LS85/S	—	DN74LS160A/S	—	DN74LS259/S	—	DN8680	—
DN74LS13/S	—	DN74LS86/S	—	DN74LS161A/S	—	DN74LS260/S	—		
DN74LS14/S	—	DN74LS90/S	—	DN74LS162A/S	—	DN74LS266/S	—		
DN74LS15/S	—	DN74LS92/S	—	DN74LS163A/S	—	DN74LS273/S	—		

● Bipolar Linear ICs

Type No.	Alternative	Type No.	Alternative	Type No.	Alternative	Type No.	Alternative	Type No.	Alternative
AN252	AN7140	AN2354S	AN2355S	AN3132	—	AN5222	—	AN6214	—
AN264	AN7311	AN2355FAP	AN2355S	AN3133K	—	AN5318N	—	AN6258	—
AN272U	—	AN2360S	—	AN3210K	AN3210S	AN5520	—	AN6260/S	—
AN303	—	AN2366S	—	AN3222	—	AN5630N	—	AN6291K	AN6291/S
AN321	—	AN2430	—	AN3268NK	—	AN5826NK	—	AN6299K	AN6299NK
AN349	—	AN2440S	—	AN3347FBP	—	AN5835S	AN5835	AN6321	—
AN366P	—	AN2441S	—	AN3583S	—	AN5850/S	—	AN6342	AN6342N
AN606	—	AN2455SB	—	AN3720K/NK	—	AN5855K	—	AN6343	—
AN607	AN607P	AN2513S	—	AN3790K	—	AN5902S	—	AN6350	AN6350D
AN608	AN608P	AN2581S	—	AN3792	—	AN6022	—	AN6363/S	—
AN616	—	AN2582S	—	AN3827SB	—	AN6045S	AN6045	AN6368	AN6368S
AN660	—	AN2611K	—	AN3893FHP	AN3893NFHP	AN6050	—	AN6371S	AN6371
AN915	—	AN2640K	—	AN3894FHP	—	AN6140	—	AN6387K	AN6387
AN1431	AN1431T/M	AN2662K	—	AN3928K	—	AN6172N	AN6172	AN6391NK	AN6391NS
AN2255SB	—	AN2800K	—	AN3994NS	—	AN6205	—	AN6395	—
AN2310S	—	AN2861K	—	AN5031	—	AN6208	AN6208N	AN6397	AN6397S
AN2320S	—	AN3111	—	AN5033	—	AN6209/S	—	AN6398	AN6398S
AN2335S	—	AN3122	—	AN5070	—	AN6209K	—	AN6460K	—
AN2340	—	AN3125	—	AN5101K	AN5101SC	AN6212	—	AN6512	AN6512NS
AN2341	—	AN3130	—	AN5125	—	AN6213	—	AN6548S	—

Note) Alternative product is, almost alike in characteristics and function, not same in all respects. Please examine the content when you use.

● Bipolar Linear ICs (continued)

Type No.	Alternative	Type No.	Alternative	Type No.	Alternative	Type No.	Alternative	Type No.	Alternative
AN6527	—	AN6996S	—	AN7211	—	AN7337	AN7337N	AN8050S	—
AN6601N	—	AN6998S	—	AN7213S	AN7205	AN7372K	—	AN8080K	—
AN6631/S	—	AN7001	—	AN7216S	AN7205	AN7383K	—	AN8236S	—
AN6632S	—	AN7002S	AN7002K	AN7218	—	AN7400S	—	AN8250/N	—
AN6633	—	AN7010K	AN7016NK	AN7221	AN7221S	AN7410/N	—	AN8270K	—
AN6635	—	AN7014K	—	AN7225	AN7236S	AN7411/S	—	AN8280	—
AN6640	—	AN7017S	AN7017SB	AN7226/CL/S	AN7236S	AN7415/S	—	AN8295	—
AN6653/S	—	AN7025S	AN7025K	AN7227	—	AN7417	AN7414	AN8315	—
AN6656	AN6656S	AN7045S	AN7045NS	AN7230S	—	AN7471S	—	AN8913SB	AN8913SCR
AN6662	—	AN7100S	—	AN7230CL	—	AN7670	—	AN90B00	AN90B01S
AN6667S	—	AN7101S	—	AN7236CL	AN7236S	AN7671	—	AN90B10S	AN90B10
AN6668NS	—	AN7102CL/S	—	AN7252	AN7254	AN7672	—	AN90B80/S	—
AN6730	—	AN7118	AN7118S	AN7258	AN7259S	AN7673	—	AN90B82	AN90B82S
AN6751	—	AN7127	—	AN7266	—	AN7674	—	AN90C20	—
AN6811	AN6811(K)	AN7147	AN7147N	AN7275	—	AN7675	—	AN90D21	—
AN6820	—	AN7172K	AN7172NK	AN7277	—	AN7676	—		
AN6857	AN6857N	AN7200CL	AN7200S	AN7315	—	AN7677S	—		
AN6995	—	AN7210	—	AN7330K	—	AN7678S	—		

● Diodes, Hall Elements

Type No.	Alternative	Type No.	Alternative	Type No.	Alternative	Type No.	Alternative	Type No.	Alternative
MA72	MA73	MA141WA	MA142WA	MA155WA	MA205WA	MA337	MA365	MA772	—
MA74WA	MA75WA	MA141WK	MA142WK	MA155WK	MA205WK	MA353	MA371	OH002	OH009
MA74WK	MA75WK	MA151A	MA152A	MA157	MA157A	MA363	MA372	OH015	—
MA110	MA111	MA151K	MA152K	MA159	MA159A	MA364	MA357	OH018	—
MA141A	MA142A	MA151WA	MA152WA	MA181	—	MA552	—	OH024	—
MA141K	MA142K	MA151WK	MA152WK	MA184	MA185	MA771	—	OH025	—

● Opto-electronic Devices

Type No.	Alternative	Type No.	Alternative	Type No.	Alternative	Type No.	Alternative	Type No.	Alternative
LN21	LN21RPHL	LN25	LN25RCP	LN122CAL	—	LN98100PR	—	PN3205	—
LN21CP	LN21CPHL	LN25D	LN25RP	LN122L	—	LN9880P	—	PN3208	—
LN21CP-(L)	—	LN26D	LN26RP	LN123DF	—	LN9880PR	—	PN330CL002	—
LN21MC	—	LN27CP	LN29CP	LN176	—	LN123DF002	—	PN330F002	PN335-004
LN21RP	LN21RPH	LN27RP	LN29RP	LN181C	—	LN124D002	—	PN332F002	—
LN21RP-(L)	—	LN27RCP	LN29RCP	LN181L	—	LN125D002	—	PN334-002	PN335-004
LN21RPTV	—	LN27WP	LN29WP	LN181LA	—	PN103	PN101	PN335-002	PN335-004
LN21RCP	LN21RCPH	LN30	—	LN183	—	PN302E	PN312E	PN3603(H)	—
LN21W	LN21WPHL	LN(MEL4720)	—	LN183H	—	PN304C	—	PN3606	—
LN21WP	LN21WPHL	LN31	LN31GPHL	LN186H	—	PN304K	—	PN3608	—
LN22	—	LN31GP	LN31GPH	LN187	—	PN304V	PN3405	PN3608K	PN316K2
LN22(DT)	—	LN31GCP	LN31GCPH	LN193	—	PN308	—	PN3611	—
LN22-(L)	—	LN31GCP(u)	LN31GCPH	LN9747P	—	PN311/KN	—	PN3616	—
LN22S	—	LN32	—	LN9710	—	PN311H	—	PN3618	—
LN22W	—	LN33GP-(L)	—	LN9710P	—	PN312E	—	PN3620	—
LN23	—	LN37GP	LN39GP	LN9810K	—	PN313F	PN313B	ON1631/2631	—
LN23-(L)	—	LN37GCP	LN39GCP	LN9805K	—	PN314K	PN3405	ON2160	—
LN23RP-(L)	—	LN41YP	LN41YPH	LN9820	LN9830	PN316C2	—	ON3631R	—
LN23S	—	LN41YCP	LN41YCPH	LN9825K	LN9830	PN321C	—	ON3631T	—
LN23SR	—	LN120	—	LN98100P	—	PN3201	—		

● Transistors, FETs, IGBTs, IPDs

Type No.	Alternative	Type No.	Alternative	Type No.	Alternative	Type No.	Alternative	Type No.	Alternative
2SA564/A	2SA1309A	2SB868	2SB944	2SB1162	2SB1347	2SC1730	2SD1847	2SC2660/A/B	2SD1264/A
2SA1112	2SB1414	2SB869	2SB945	2SB1163	2SB1317	2SC1845	2SC3311	2SC2738	2SC3868
2SA1125	2SA1124	2SB870	2SB946	2SB1190/A	2SB1192/A	2SC1848	2SC1398	2SC2739	2SC3870
2SA1133/A	2SB940/A	2SB871/A	2SB948/A	2SB1206	2SB774	2SC1849	2SC3311A	2SC2740	2SC3210
2SA1309	2SA1309A	2SB872/A	2SB951/A	2SB1208	—	2SC1851/2	2SC1318	2SC2803	—
2SA1605	—	2SB894	2SB774	2SB1218	2SB1218A	2SC1853	2SC829/3313	2SC2831/A	2SC3352/A
2SA1698	2SA1767	2SB896/A	2SB947/A	2SB1264	2SA1018	2SC1854	2SC3311A	2SC2832/A	2SC3972/A
2SA1747	2SB709A	2SB925/A	2SB953/A	2SB1265	—	2SC1989	2SC1359	2SC2833/A	2SC3211/A
2SB641	2SB642	2SB1055	2SB1371	2SB1320	2SB1320A	2SC1990	2SC1047	2SC2834/A	—
2SB709	2SB709A	2SB1056	2SB1372	2SB1376	—	2SC2291	—	2SC2841	2SC3211
2SB747	—	2SB1057	2SB1361	2SB1489	—	2SC2292	—	2SC2843	—
2SB750/A	2SB949/A	2SB1062	2SB970	2SC828	—	2SC2360(H)	2SC4975	2SC2846	2SC1215
2SB751/A	2SB950/A	2SB1069	2SB1071	2SC901/A/B	—	2SC2567	2SC2406	2SC2852	2SC2851
2SB761/A	2SB941/A	2SB1157	2SB1361	2SC1440	2SD1846	2SC2591	2SC3944	2SC2866	2SC1473A
2SB762/A	2SB942/A	2SB1158	2SB1371	2SC1684	2SC3311A	2SC2592	2SD2134	2SC2989	—
2SB807	2SB792	2SB1159	—	2SC1685	2SC3311A	2SC2633	—	2SC3110	2SC3934
2SB835	2SB956	2SB1160	2SB1361	2SC1687	—	2SC2637	2SC3945	2SC3169	2SC3869
2SB867	2SB943	2SB1161	2SB1373	2SC1688	—	2SC2645	—	2SC3170	—

Note) Alternative product is, almost alike in characteristics and function, not same in all respects. Please examine the content when you use.

Maintenance Types

● Transistors, FETs, IGBTs, IPDs (continued)

Type No.	Alternative	Type No.	Alternative	Type No.	Alternative	Type No.	Alternative	Type No.	Alternative
2SC3250	—	2SD876	2SD1272	2SD1443/A	2SD1445/A	2SK218	—	2SK667/A	2SK1606
2SC3251	—	2SD884	—	2SD1449	2SC1980	2SK321	—	2SK757	—
2SC3285	2SC3506	2SD885	—	2SD1461	—	2SK378	—	2SK759	—
2SC3311	2SC3311A	2SD886/A	2SD1273/A	2SD1476	2SD2000	2SK379	2SK1606	2SK760	—
2SC3369	—	2SD887	2SD1273	2SD1483	—	2SK380	2SK1606	2SK761	—
2SC3371	—	2SD888	—	2SD1486	2SD2064	2SK437/H	—	2SK762/A	2SK1833
2SC3407	—	2SD889	2SD1010	2SD1487	2SD2065	2SK438	2SK649	2SK763/A	2SK1605
2SC3508	—	2SD892/A	2SD1205/A	2SD1488	2SD2052	2SK495	2SK1255	2SK767	2SK1608
2SC3509	—	2SD893/A	2SD1198/A	2SD1516	2SD1517	2SK496	2SK1255	2SK769	2SK1609
2SC3610	2SC3943	2SD917	2SD1270	2SD1533	2SD1535	2SK497	2SK1255	2SK770	—
2SC3737	—	2SD959	2SD1268	2SD1537	2SD1539	2SK498	2SK1255	2SK795	—
2SC3791	—	2SD960	2SD1269	2SD1635	—	2SK499	2SK1255	2SK796/A	2SK1611
2SC4158	—	2SD961	2SD1270	2SD1636	2SC3941A	2SK500	2SK1033	2SK804	—
2SC4238	2SC2480	2SD1009	—	2SD1657	2SD1330	2SK501/A	2SK1606	2SK805	—
2SC4239	2SC3130	2SD1091	2SD1276	2SD1712	—	2SK502/A	2SK1833	2SK806	—
2SC4444	2SC4971	2SD1112	—	2SD1713	2SD2064	2SK503/A	2SK1833	2SK807	—
2SC4515	—	2SD1120	—	2SD1714	2SD2065	2SK593	GN1041	2SK808/A	2SK1834
2SC4516	—	2SD1121	—	2SD1715	2SD2052	2SK602/A	2SK1834	2SK809/A	2SK1613
2SC4561	—	2SD1122	—	2SD1716	2SD2066	2SK603/A	2SK1611	2SK868/A	—
2SC4670	—	2SD1123	—	2SD1717	2SD2029	2SK604/A	2SK1613	2SK870	—
2SC4894	2SC4782	2SD1124	—	2SD1718/A	2SD1975	2SK605	—	2SK981/A	—
2SC4970	2SC3757	2SD1125	—	2SD1730	—	2SK610	2SK1833	2SK1030/A	2SK1611
2SD389/A	2SD1266/A	2SD1169	2SD1315	2SD1770/A	2SD1772/A	2SK617/A	2SK1834	2SK1196	—
2SD591	2SC3311A	2SD1176/A	2SD1277/A	2SD1774/A	2SD1776/A	2SK621	2SK665	2SK1308/A	—
2SD601	2SD601A	2SD1206	—	2SD1808	—	2SK626	2SK1033	2SK1689	—
2SD636	2SD637	2SD1214	2SD1322	2SD1819	2SD1819A	2SK627/A	2SK1033	2SK1935	2SK123
2SD762/A	2SD1266/A	2SD1215	2SD1323	2SD1915	—	2SK628/A	—	2SK1962	—
2SD767	2SC3311A	2SD1216	2SD1324	2SD1917	2SD2018	2SK629/A	2SK1262	2SK1963	—
2SD769/70	2SC1318	2SD1217	2SD1325	2SD1938	—	2SK630	—	2SK1964	—
2SD771	2SC2634	2SD1218	2SD1326	2SD1973	—	2SK631	2SK1035	3SK120	—
2SD772/A/B	2SD1274/A/B	2SD1219	2SD1327	2SD1991	2SD1991A	2SK632/A	—	3SK183	3SK241
2SD812	2SD1499	2SD1245	2SD1446	2SD2068	—	2SK633/A	—	3SK184	3SK241
2SD836/A/B	2SD1275/A	2SD1290	2SD1728	2SD2070	2SD1991A	2SK634/A	2SK1606	XN7602	XN7651
2SD837/A	2SD1276/A	2SD1291	2SD1729	2SD2072	2SD1993	2SK635	2SK766	UN215	—
2SD856/A	2SD1266/A	2SD1307	2SD1909	2SD2073	2SD1995	2SK636	2SK1609	UN401	—
2SD857/A	2SD1267/A	2SD1332	—	2SD2135	2SD2018	2SK637	2SK1609	UN403	—
2SD859	2SD1263/A	2SD1390	2SD1734	2SD2182	—	2SK638/A	2SK1611	UN4068	—
2SD860/A/B	—	2SD1440	—	2SD2435	2SD1679	2SK648	—	UN501	—
2SD866/A	2SD1271/A	2SD1442/A	2SD1444/A	2SK139	—	2SK658	2SK656		

Note) Alternative product is, almost alike in characteristics and function, not same in all respects. Please examine the content when you use.

Discontinued Types

MOS LSIs

Type No.	Alternative	Type No.	Alternative	Type No.	Alternative	Type No.	Alternative	Type No.	Alternative
MN1001	–	MN1413	–	MN15344	–	MN18943	–	MN5101	–
MN1040	–	MN14142	–	MN15362	–	MN1976	–	MN51040	–
MN110	–	MN14143	–	MN15381	–	MN19EV20	–	MN5119	–
MN1101	–	MN1415	–	MN1541	–	MN23100	–	MN5140S	–
MN115	–	MN1416	–	MN155101	–	MN231001	–	MN5178	–
MN116	–	MN1418	–	MN155102	–	MN231003	–	MN52060	–
MN1200	–	MN1420	–	MN15524	–	MN23128	–	MN5340	–
MN1201	–	MN1421	–	MN1558	–	MN231610	–	MN5550	–
MN1202	–	MN1425	–	MN1562	–	MN232000	–	MN5600	–
MN1203	–	MN1427	–	MN15621	–	MN232001	–	MN5701	–
MN1204	–	MN1432	–	MN15731	–	MN232002	–	MN5710	–
MN1205A	–	MN1441	–	MN15745	–	MN23256	–	MN5750	–
MN1205D	–	MN1442	–	MN15821	–	MN2332	–	MN5751	–
MN1205E	–	MN1450	–	MN15822	–	MN234000	–	MN6004	–
MN1205F	–	MN1450B	–	MN15823	–	MN234001	–	MN6005	–
MN1205H	–	MN1451B	–	MN15824	–	MN2364	–	MN6013	–
MN1205K	–	MN1453	–	MN158241	–	MN238000	–	MN6013BS	–
MN1205P	–	MN14531	–	MN15826	–	MN23813	–	MN6015	–
MN1206A	–	MN14532	–	MN15827	–	MN271000	–	MN6024	–
MN1207	–	MN1455	–	MN158281	–	MN271128	–	MN6025A	–
MN1207D	–	MN1455ALS	–	MN15831	–	MN271128-20	–	MN6025C	–
MN1208	–	MN1455LF	–	MN15832	–	MN27128-25	–	MN6025F	–
MN1212	MN1212A	MN1456A	–	MN158321	–	MN27128-30	–	MN6026	–
MN1213	–	MN1460	–	MN15834	–	MN27128P-30	–	MN6027B	–
MN1214	–	MN1463	–	MN1583412	–	MN2716	–	MN6030	–
MN1214A	–	MN1464	–	MN158342	–	MN2758	–	MN6031	–
MN1214B	–	MN1465	–	MN15836	–	MN2764-15	–	MN6037B	–
MN1217	–	MN146802	–	MN158410	–	MN2764-20	–	MN6043A	–
MN1217B	–	MN14821	–	MN158414	–	MN2764-25	–	MN6044	–
MN1217C	–	MN14822	–	MN15844	–	MN2764P-30	–	MN6045B	–
MN1217H	–	MN14824	–	MN15846	–	MN27C256	–	MN6045E	–
MN1218	MN1218A	MN14826	–	MN158461	–	MN27C512	–	MN6047	–
MN1226S	–	MN14831	–	MN15847	–	MN27C64A	–	MN6051A	–
MN1227A	–	MN14832	–	MN158471	–	MN3002	–	MN6051B	–
MN1230	–	MN14833	–	MN158484	–	MN3812K	–	MN6053	–
MN1234	–	MN14834	–	MN158683	–	MN3812S	–	MN6061A	–
MN12391	–	MN14843	–	MN15881	–	MN3850	–	MN6063A	–
MN1250	–	MN14844	–	MN1591	–	MN3863SA	–	MN6064C	–
MN1250B	–	MN1499	–	MN1597	–	MN4000B	–	MN6066	–
MN1252	–	MN1499A	–	MN1598	–	MN4000BS	–	MN6069	–
MN1252B1	–	MN1511	–	MN1599	–	MN4002B	–	MN6070	–
MN1252B1S	–	MN151121	–	MN1610	–	MN4002BS	–	MN6078	–
MN1254	–	MN1512	–	MN1610A	–	MN4008B	–	MN6080	–
MN1255	–	MN1513	–	MN1611	–	MN4008BS	–	MN6090	–
MN1257	–	MN1514	–	MN1630	–	MN4012B	–	MN6090B	–
MN1257C	–	MN15141	–	MN1640	–	MN4012BS	–	MN6096	–
MN1257CQ	–	MN1522	–	MN1640A	–	MN40161B	–	MN6101	–
MN1259	–	MN15221	–	MN1650	–	MN40161BS	–	MN6106B	–
MN1260	–	MN15222	–	MN1668	–	MN4031B	–	MN61074	–
MN1267A	–	MN15223	–	MN17521	–	MN4031BS	–	MN61078	–
MN127125	–	MN15241	–	MN1754	MN170401	MN4035B	–	MN61120	–
MN1273	–	MN15243	–	MN1758	MN170801	MN4035BS	–	MN6115	–
MN1275	–	MN15244	–	MN17861	MN170803A	MN4086B	–	MN6115F	–
MN12871	–	MN15245	–	MN17P58	MN17P1601	MN4086BS	–	MN61211	–
MN12872	–	MN15247	–	MN1800	–	MN4104B	–	MN61211A	–
MN128721	–	MN15251	–	MN1800A	–	MN4104BS	–	MN6125	–
MN1287C	–	MN152611	–	MN1809	–	MN4502B	–	MN6131B	–
MN1289	–	MN15266	–	MN1871611	–	MN4502BS	–	MN6131C	–
MN1291	–	MN15267	–	MN187163	MN187164	MN4519B	–	MN6131S	–
MN1294	–	MN15281	–	MN1872012	–	MN4519BS	–	MN6138	–
MN1295	–	MN15282	–	MN1872419	–	MN4555B	–	MN6142	–
MN1297	–	MN15284	–	MN1873213	–	MN4555BS	–	MN6145	–
MN12971	–	MN15285	–	MN18762	MN1871215	MN4557B	–	MN6147S	–
MN12972	–	MN152851	–	MN18781	MN187124	MN4557BS	–	MN6149	–
MN1297HNE	–	MN15286	–	MN18802A	–	MN4724B	–	MN6160PA	–
MN131A	–	MN15287	–	MN188167	–	MN4724BS	–	MN6160PB	–
MN1404	–	MN15288	–	MN18882	–	MN4864	–	MN6164	–
MN1405	–	MN15342	–	MN18916	–	MN50040	–	MN6168	–
MN1411	–	MN15343	–	MN189161	–	MN51003	–	MN6169A	–

Note) Alternative product is, almost alike in characteristics and function, not same in all respects. Please examine the content when you use.

Discontinued Types

● MOS LSIs (continued)

Type No.	Alternative	Type No.	Alternative	Type No.	Alternative	Type No.	Alternative	Type No.	Alternative
MN6171	–	MN6204	–	MN6275B	–	MN6747	–	MN80C48	–
MN6172A	–	MN6205	–	MN6281	–	MN67471	–	MN80C49	–
MN61752	–	MN6208	–	MN6305	–	MN674711	–	MN8350	–
MN617521	–	MN6209	–	MN6401	–	MN67472	–	MN83822B	–
MN61753	–	MN6221	–	MN6402	–	MN6749	–	MN8580	–
MN61754	–	MN6221BE	–	MN6403	–	MN6802	–	MN8600	–
MN6178	–	MN6221CE	–	MN6404	–	MN74HC107S	–	MN8601	–
MN6179	–	MN6221CH	–	MN6410	–	MN74HC148S	–	MN8611AG	–
MN61792	–	MN6221DF	–	MN64101	–	MN74HC153S	–	MN86163	–
MN6184	–	MN6221FB	–	MN6411A	–	MN74HC173S	–	MN86164FHP	–
MN6184F	–	MN6221NKA	–	MN6472	–	MN74HC4520S	–	MN86221	–
MN6186	–	MN6221NS	–	MN6476	–	MN8023A	–	MN8630	–
MN6188	–	MN6221NSA	–	MN6560	–	MN8028A	–	MN8631	–
MN6190	–	MN6250	–	MN6561	–	MN8038S	–	MN8680	–
MN6191	–	MN6254	–	MN6620	–	MN8041S	–	MN871501	–
MN6201	–	MN6270	–	MN67451	–	MN8051	–		

● MOS Memories

Type No.	Alternative	Type No.	Alternative	Type No.	Alternative	Type No.	Alternative	Type No.	Alternative
MN2114	–	MN4164L	–	MN41C1000SJ	–	MN42C4256AL	–	MN4B36512	–
MN2114S	–	MN4164P	–	MN41C1002L	–	MN42C4256ASJ	–	MN4B40512	–
MN27128	–	MN4264	–	MN41C1002SJ	–	MN42C4256AT	–	MN41C41000L	–
MN2764	–	MN4364	–	MN41C4256	–	MN42C4256L	–	MN41C41000SJ	MN414400CSJ
MN27C512	–	MN4364A	–	MN41C4256A	–	MN42C4256SJ	–	MN4117100SJ	–
MN41256A	–	MN4364S	–	MN41C4256AT	–	MN4A081M	–	MN4117400SJ	–
MN41256AL	–	MN42C1000ASJ	–	MN41C4256ATR	–	MN4A084M	–	MN4117400TT	–
MN41256E	–	MN411001	–	MN41C4256L	–	MN4A08512	–	MN4416	–
MN41257A	–	MN414256	–	MN41C4256SJ	–	MN4A091M	–	MN44251	–
MN41257AL	–	MN414256L	–	MN41C4258L	–	MN4A094M	–	MN44251M	–
MN41432V	–	MN414256SJ	–	MN42C1000ASJ	–	MN4A361M	–	MN44251SJ	–
MN41464	–	MN41C1000	–	MN42C1000AT	–	MN4A36256	–	MN44256TR	–
MN41464AL	–	MN41C1000A	–	MN42C1000ATR	–	MN4A36512	–	MN4714F	–
MN41464AS	–	MN41C1000L	–	MN42C1000SJ	–	MN4B36256	–	MN4740FS	–

● MOS CCDs

Type No.	Alternative	Type No.	Alternative	Type No.	Alternative	Type No.	Alternative	Type No.	Alternative
MN3660	MN3615	MN3739F	–	MN3752F	–	MW3732	–	MW3746GH	–
MN3663	MN3664	MN3740SK/F	–	MN3761F/SK	–	MW3735MF/MS	–	MW3751MF/MS	–
MN3734F	–	MN3745SK/SC/F	–	MN3762F	–	MW3736GH	–		
MN3734K	–	MN3749F	–	MN8060A	MN3615	MW3742	–		
MN3735F/SC	–	MN3751F/SK	–	MN8063	MN3664	MW3745MF/MS	–		

● Bipolar Digital ICs

Type No.	Alternative	Type No.	Alternative	Type No.	Alternative	Type No.	Alternative	Type No.	Alternative
DN803T	–	DN821	–	DN74LS147/S	–	DN74LS249/S	–	DN74LS668/S	–
DN804	–	DN822	–	DN74LS190/S	–	DN74LS261/S	–	DN74LS669/S	–
DN805	–	DN1930Series	–	DN74LS194/S	–	DN74LS295B/S	–	DN74LS670/S	–
DN806	–	DN74LS24/S	–	DN74LS196/S	–	DN74LS445/S	–	DN74LS673/S	–
DN807	–	DN74LS40/S	–	DN74LS247/S	–	DN74LS490/S	–	DN74LS674/S	–
DN820	–	DN74LS133/S	–	DN74LS248/S	–	DN74LS645/S	–	DN74LS84368/S	–

● Bipolar Linear ICs

Type No.	Alternative	Type No.	Alternative	Type No.	Alternative	Type No.	Alternative	Type No.	Alternative
AN101	–	AN225	–	AN248	–	AN325	AN325P	AN610	AN610P
AN103	–	AN227	–	AN249	–	AN326	–	AN612/P	–
AN202	–	AN228/W	–	AN258	–	AN328	–	AN811	–
AN203	–	AN229	–	AN259	–	AN332	–	AN829/Y	AN829P
AN204	–	AN230	–	AN260/P	–	AN333	–	AN851	–
AN205	–	AN231	–	AN271	–	AN334	–	AN903	–
AN206	–	AN232	–	AN272	–	AN340/P	–	AN2130	–
AN208	–	AN233	–	AN274	–	AN342	–	AN2253S	–
AN209	–	AN234	–	AN277	–	AN343	–	AN2373/S	–
AN212	–	AN235	–	AN278	–	AN345V	–	AN3912S	AN3912
AN213	–	AN237	–	AN281	–	AN355	–	AN5217	–
AN214	–	AN238S	–	AN282	–	AN362/L	–	AN5260	–
AN215	–	AN240	–	AN288	–	AN363/N	–	AN5620K	AN5620N
AN217	–	AN240PD	–	AN289	–	AN366	–	AN5826NS	–
AN219	–	AN241/P	–	AN295	–	AN370	–	AN5836S	AN5836
AN220	–	AN242	–	AN313/U	–	AN374	–	AN6262	AN6262N
AN221	–	AN245	–	AN318	–	AN377	–	AN6263	AN6263N
AN223	–	AN247P	–	AN320	–	AN380	–	AN6295K	–

Note) Alternative product is, almost alike in characteristics and function, not same in all respects. Please examine the content when you use.

● Bipolar Linear ICs (continued)

Type No.	Alternative	Type No.	Alternative	Type No.	Alternative	Type No.	Alternative	Type No.	Alternative
AN6298K	AN6298NK/NS	AN6617	—	AN7071	AN7072N	AN7154	AN7140	AN7418	AN7418S
AN6326	AN6326N	AN6859	—	AN7111	AN7141N	AN7155	AN7140	AN8212K	—
AN6331	—	AN6881	—	AN7114	AN7120	AN7156	AN7158N	AN8812SC/SCR	AN8816SB
AN6341	AN6341N	AN6889	—	AN7115	AN7120	AN7162K	AN7172NK		
AN6347	—	AN7000	—	AN7143	AN7139	AN7248S	—		
AN6381/S	—	AN7070	AN7062N	AN7149	AN7149N	AN7320	—		

● Transistors, FETs, IGBTs, IPDs

Type No.	Alternative	Type No.	Alternative	Type No.	Alternative	Type No.	Alternative	Type No.	Alternative
2SA100	—	2SB171	—	2SB714	—	2SC697	2SC1398	2SC1913/A/B	—
2SA101	—	2SB172	—	2SB759/A	2SA1309A	2SC697A	2SC1398A	2SC1929	—
2SA102(T)	—	2SB173	—	2SB760/A/B	2SB1052	2SC730	—	2SC1973	—
2SA103	—	2SB174	—	2SB763	—	2SC731	—	2SC1974	—
2SA104	—	2SB175	—	2SB763A	—	2SC761	—	2SC1975	—
2SA341	2SA838	2SB176	—	2SB812	2SB1361	2SC762	—	2SC1976	2SC2851
2SA342	2SA838	2SB177	—	2SB812A	2SB1361	2SC821	2SC2988	2SC1977	2SC2988
2SA546	2SA1096	2SB178/A	—	2SB814	2SA1034	2SC822	2SC2988	2SC1978	—
2SA546A	2SA1096A	2SB232	—	2SB977/B	—	2SC840	2SD1264	2SC2034	—
2SA547	2SA748	2SB233	—	2SB979	—	2SC840A	2SD1264	2SC2076	2SC1359
2SA547A	—	2SB234	—	2SB980	2SB1371	2SC947	2SC1215	2SC2077	—
2SA550	2SA1309A	2SB278	—	2SB981	2SB1372	2SC948	2SC1215	2SC2085	—
2SA550A	2SA1309A	2SB279	—	2SB982	2SB1361	2SC1012	2SC2258	2SC2113	2SC1847
2SA637	2SA1018	2SB280	—	2SB1075	—	2SC1012A	2SC2258	2SC2152	—
2SA666	2SA1127	2SB281	—	2SB1222	—	2SC1033	2SC1573	2SC2153	2SC2671(F)
2SA666A	2SA1127	2SB282	—	2SB1415	—	2SC1033Z	—	2SC2192	—
2SA685	2SA1018	2SB283	—	2SB1422	—	2SC1033A	2SC1573	2SC2257	—
2SA699B	—	2SB284	—	2SB1437	—	2SC1033AZ	—	2SC2263	2SC2634
2SA721	2SA1127	2SB285	—	2SB1456	—	2SC1073	—	2SC2264	—
2SA722	2SA1127	2SB287	—	2SB1536	2SB937	2SC1074	—	2SC2294	—
2SA730	2SA719	2SB288	—	2SB1541	—	2SC1075	—	2SC2360	—
2SA731/A	2SA720	2SB289	—	2SB1542	2SB1435	2SC1076	—	2SC2361	2SD1267A
2SA749	2SA1018	2SB309	—	2SB1543	2SB1416	2SC1190	—	2SC2414	2SC3868
2SA749A	2SA1018	2SB310	—	2SB1544	—	2SC1191	—	2SC2415	2SC3870
2SA751	2SA683	2SB311	—	2SB1545	—	2SC1192	—	2SC2416	2SC3210
2SA752	2SA684	2SB312	—	2SB1546	—	2SC1192A	—	2SC2447	—
2SA766	2SB940	2SB324	—	2SB1547	—	2SC1303	2SC2851	2SC2454	—
2SA774/A	2SA1127	2SB335	—	2SB1615	—	2SC1326	—	2SC2455	2SC2671(F)
2SA795	2SA1111	2SB336	—	2SC34	—	2SC1327	2SC2634	2SC2484	—
2SA837	2SB1371	2SB345	—	2SC35	—	2SC1328	2SC2634	2SC2485	2SD2064
2SA843	2SB940	2SB346	—	2SC36	—	2SC1346	2SC1317	2SC2486	2SD2065
2SA880	2SA1310	2SB347	—	2SC50	—	2SC1347	2SC1318	2SC2487	2SD2065
2SA882	2SB946	2SB348	—	2SC58	2SC2258	2SC1354	—	2SC2488	2SD2065
2SA887	2SA748	2SB371	—	2SC58A	2SC2258	2SC1405	—	2SC2489	2SD2052
2SA912	2SA1124	2SB376	—	2SC98	—	2SC1406	2SC1383	2SC2519	2SC3313
2SA913	2SA1111	2SB401	—	2SC99	—	2SC1407	2SC1384	2SC2556/A	—
2SA913A	—	2SB402	—	2SC316	2SC1359	2SC1446	—	2SC2557	—
2SA913B	—	2SB403	—	2SC456	—	2SC1450	2SD1264	2SC2561	2SC3314
2SA972/A	2SA1309A	2SB448	—	2SC477	2SC1359	2SC1478	2SC2634	2SC2582	2SC1846
2SA973	2SA1127	2SB449	—	2SC478	2SC1318	2SC1478A	2SC2634	2SC2646	2SC3354
2SA977	—	2SB473	—	2SC526	2SC2258	2SC1501	2SC3063	2SC2657	2SC3352
2SA1060	2SB1054	2SB475	—	2SC538	2SC3311A	2SC1547	—	2SC2657A	2SC3352A
2SA1061	—	2SB476	—	2SC538A	2SC3311A	2SC1550	2SC2258	2SC2658	2SC3352
2SA1062	—	2SB481	—	2SC539	2SC2634	2SC1556	—	2SC2658A	2SC3352A
2SA1063	2SB946	2SB493	—	2SC562	—	2SC1565	—	2SC2659	2SC3972
2SA1064	2SB1372	2SB512	2SB941	2SC563	—	2SC1565A	—	2SC2659A	2SC3972A
2SA1065	2SB1361	2SB512A	2SB941A	2SC563A	—	2SC1566	2SC2258	2SC2671	2SC2671(F)
2SA1092	—	2SB513	2SB941A	2SC571	2SC2988	2SC1620	—	2SC2680	—
2SB77/A	—	2SB513A	2SB941A	2SC572	—	2SC1667	2SD2064	2SC2683	—
2SB126	—	2SB532	2SB945	2SC573	—	2SC1683	—	2SC2684	—
2SB126A	—	2SB533	—	2SC581	2SC829	2SC1683A	—	2SC2685	—
2SB127	—	2SB604	—	2SC582	—	2SC1686	—	2SC2686	—
2SB127A	—	2SB625	2SB1371	2SC583	2SC2671(F)	2SC1778	2SC1215	2SC2687	—
2SB128	—	2SB626	2SB1372	2SC585	—	2SC1779	2SC2671(F)	2SC2844	—
2SB128A	—	2SB667	—	2SC586	2SD1274	2SC1780	2SC2671(F)	2SC2845	—
2SB129	—	2SB668	2SB949	2SC600	—	2SC1787	2SC3312	2SC2847	2SC2480
2SB129A	—	2SB668A	2SB949A	2SC644	2SC2634	2SC1788	2SD1302	2SC2848	—
2SB130	—	2SB669	2SB950	2SC645	2SC1359	2SC1789	2SC2671(F)	2SC2849	2SC2671(F)
2SB157	—	2SB669A	2SB950A	2SC646	—	2SC1790	2SC2671(F)	2SC2860	2SC3315
2SB158	—	2SB691	2SB1371	2SC647	—	2SC1818	—	2SC2991	—
2SB159	—	2SB692	2SB1372	2SC687	2SD1274	2SC1819M	—	2SC2992	—
2SB160	—	2SB695	2SB1361	2SC696	2SC2497	2SC1858	—	2SC3054	—
2SB170	—	2SB713	2SB1362	2SC696A	2SC2497A	2SC1885	2SC2632	2SC3106	—

Note) Alternative product is, almost alike in characteristics and function, not same in all respects. Please examine the content when you use.

Discontinued Types

● Transistors, FETs, IGBTs, IPDs (continued)

Type No.	Alternative	Type No.	Alternative	Type No.	Alternative	Type No.	Alternative	Type No.	Alternative
2SC3107	—	2SD318	2SD1266	2SD849	2SD1391	2SK83	—	3SK24	—
2SC3108	—	2SD318A	2SD1266A	2SD850	2SD1737	2SK84	2SK1104	3SK25	—
2SC3109	—	2SD319	—	2SD855	—	2SK127	2SK1104	2SK32	—
2SC3111	—	2SD321	—	2SD855A	—	2SK127A	2SK1104	3SK39	3SK286
2SC3276	—	2SD324	—	2SD861	—	2SK128	—	3SK49	3SK286
2SC3287	—	2SD334	2SD2064	2SD861A	—	2SK136	2SK1104	3SK66	3SK143
2SC3288	—	2SD350	2SD1577	2SD890	—	2SK148	—	3SK72	3SK144
2SC3289	—	2SD351	—	2SD891	—	2SK165	—	3SK97	—
2SC3290	—	2SD365	2SD1266	2SD901	—	2SK199	—	3SK100	3SK143
2SC3291	—	2SD365A	2SD1266A	2SD919	2SD1423	2SK247	—	3SK116	3SK144
2SC3368	—	2SD366	2SD1266	2SD950	2SD1541	2SK316	—	3SK117	3SK143
2SC3477	—	2SD366A	2SD1266A	2SD951	—	2SK606	—	3SK118	3SK227
2SC3526	2SC3526(H)	2SD367	—	2SD952	—	2SK607	—	3SK119	3SK286
2SC3719	—	2SD379	2SD1267	2SD953	2SD1577	2SK624	—	3SK120	—
2SC3720	—	2SD380	2SD1850	2SD954	—	2SK650	—	3SK125	—
2SC3903	2SC3904	2SD390	2SD1985	2SD967	—	2SK651	—	3SK128	3SK227
2SC3945	2SC3942	2SD390A	2SD1985A	2SD969	—	2SK652	2SK374	3SK129	—
2SC3966	—	2SD458	—	2SD1032	—	2SK689	—	3SK139	3SK227
2SC3967	—	2SD470	—	2SD1032A	—	2SK691	—	3SK141	3SK241
2SC4068	—	2SD470B	—	2SD1043	—	2SK697	GN1010	3SK142	—
2SC4309	—	2SD517	2SD2332	2SD1044	2SD1457	2SK742/A	2SK1255	3SK193	—
2SC4379	—	2SD546	2SC3353A	2SD1044A	2SD1457A	2SK743/A	—	3SK201	—
2SC4421	—	2SD570	2SD1267/A	2SD1105	—	2SK744/A	—	GN1000	—
2SC4442	—	2SD577	2SD1439	2SD1151	—	2SK745/A	2SK1033	GN1012	—
2SC4471	—	2SD589	—	2SD1154	2SD1680	2SK746/A	2SK1033	GN1101	GN1015
2SC4661	—	2SD597	2SD1485	2SD1168	2SD2332	2SK747/A	—	GN1013	—
2SC4882	—	2SD598	—	2SD1171	2SD1728	2SK748/A	—	GN1020	—
2SC4929	—	2SD603	2SC3311A	2SD1172	—	2SK749/A	—	GN1021	GN1015
2SD12	—	2SD632	—	2SD1173	—	2SK750/A	2SK1262	GN1023	—
2SD13	—	2SD649	2SD1632	2SD1175	2SD2057	2SK751/A	2SK1262	GN2000	—
2SD14	—	2SD671	2SD1302	2SD1301	2SD1727	2SK752	—	GN2010	GN2011
2SD31	—	2SD672	—	2SD1305	2SD814A	2SK753	2SK1265	GN02015	—
2SD32	—	2SD678	2SD1275	2SD1333	2SD2064	2SK754	2SK1035	UN001	—
2SD35	—	2SD678A	2SD1275A	2SD1334	2SD2065	2SK755	—	UN002	—
2SD36	—	2SD679	2SD1276	2SD1335	2SD2052	2SK756	—	UN004	—
2SD178	—	2SD679A	2SD1276A	2SD1526	2SC2631	2SK764/A	2SK1606	UN005	—
2SD178A	—	2SD691	—	2SD1531	2SC1847	2SK765/A	2SK1606	UN006	—
2SD178Z	—	2SD692	—	2SD1807	—	2SK768	2SK1609	UN015	—
2SD189	—	2SD693	—	2SD1971	—	2SK803	2SK1035	UN101	—
2SD189A	—	2SD727	—	2SD2326	2SD2018	2SK818/A	2SK1613	UN102	—
2SD198	2SD1263	2SD728	2SD2064	2SD2361	—	2SK862	—	UN207	—
2SD198A	2SD1263A	2SD731	2SD2065	2SD2362	2SD2178	2SK863/A	—	UN208	—
2SD199	2SC3352	2SD746	—	2SD2363	2SD2136	2SK864/A	—	UN209	—
2SD200	2SD1734	2SD749	2SC3972	2SD2364	—	2SK865/A	2SK1262	UN210	—
2SD226/A/B	2SD1266/A	2SD750	2SD2052	2SD2365	—	2SK866/A	—	UN431	—
2SD266	2SD1985	2SD751	2SD2052	2SD2366	—	2SK867/A	2SK1607	UN06B	GN05008N
2SD266A	2SD1985A	2SD766	—	2SD2404	—	2SK869	2SK1610	UN06C	GN05003
2SD266B	2SD1985A	2SD778	2SD637	2SJ43	—	2SK1032	2SK1614	UN5101	—
2SD299	2SD1391	2SD779	2SD637	2SJ84/A	2SJ163	2SK1100	—	UN5201	—
2SD300	2SD1391	2SD792	2SD1391	2SJ129	2SJ163	2SK1216	—	MIP701	—
2SD312	2SC3353	2SD803	2SD1608	2SK50	2SK65	2SK1330	2SK1803	MIP702	—
2SD317	2SD1266	2SD804	2SD1266	2SK56	—	2SK1687	—	MIP703	—
2SD317A	2SD1266A	2SD813	2SD1328	2SK66	2SK301	2SK1688	—		

Note) Alternative product is, almost alike in characteristics and function, not same in all respects. Please examine the content when you use.

● Diodes, Thyristors, Hall Elements

Type No.	Alternative	Type No.	Alternative	Type No.	Alternative	Type No.	Alternative	Type No.	Alternative
OA70	—	MA101	—	MA323	—	MA630	—	OH007	—
OA79	—	MA102	—	MA324	MA339	MA644	MA6D49	OH011	OH023
OA81	—	MA103	—	MA325	MA334	MA660	MA6D50	OH015	—
OA85	—	MA104	—	MA326	MA329	MA667	—	OH018	—
OA90	—	MA106	—	MA327	MA321	MA702	MA707	OH019	—
OA91	—	MA172	MA180	MA328	MA338	MA708	—	OH020	—
OA95	—	MA186	—	MA330	MA339	MA709	—	OH027	—
OA99	—	MA203	—	MA332	MA331	MA710	—	OH029	—
MA11	—	MA211	—	MA340	MA341	MA711	—	OH050	—
MA13	—	MA215	—	MA350	—	MA1000 Series	MA1000 Series	OH100	—
MA17	—	MA231	—	MA351	—	(A rank)	(M rank)	OH451	—
MA18	—	MA232	—	MA355	MA357	2SF229	—	OH500	—
MA21	—	MA233	—	MA361	—	2SF248	—	OH600	—
MA23	—	MA241	—	MA373	MA379	2SF248A	—	OH750	—
MA25	—	MA242	—	MA375	MA380	2SF940	—	OH751	—
MA26	MA29	MA242C	—	MA381	—	2SF1060	—	OH00030	—
MA26W	MA29W	MA242CR	—	MA432	—	2SF1168	—	OH00031	—
MA26WO	MA29W	MA242R	—	MA433	—	2SF1168A	—	M47F	—
MA26T	MA29T	MA251	—	MA520	—	3SF11	—	M21C	—
MA47	—	MA252	—	MA521	—	2SM58	—	M21CA	—
MA48	—	MA253	—	MA522	—	2SM58A	—	M21F	—
MA49	—	MA261	—	MA550	MA551	2SM75	—	M23	—
MA51A	—	MA262	—	MA603	—	2SM79	—	M23C	—
MA53	—	MA263	—	MA604	—	2SM125	—	M23CA	—
MN56	MA73	MA292	—	MA605	—	2SM151	—	M59C	—
MA61	MA64	MA301	—	MA615	—	2SM152	—	M91F	—
MA62	MA64	MA302	—	MA619	—	OH001	OH009		
MA79	MA77	MA303	—	MA622	—	OH002	OH009		
MA83	MA77	MA320	MA334	MA625	—	OH005	—		
MA90	—	MA322	—	MA627	MA643	OH006	—		

● Opto-electronic Devices

Type No.	Alternative	Type No.	Alternative	Type No.	Alternative	Type No.	Alternative	Type No.	Alternative
LN10	—	LN122DF	—	LN322CP	—	PN328	PN328B	ON3113	ON3133
LN11	—	LN122DL	—	LN323GP	—	PN330F	—	ON3151	ON3131
LN11W	—	LN122F	—	LN9705D	—	PN405A004	—	ON3152	ON3132
LN12	—	LN123DL	—	LN9705PT	LN9705	PN3407	—	ON3153	ON3133
LN12W	—	LN124D	—	LN9707	—	PN3504	—	ON3161	ON3131
LN13	—	LN125	—	LN9707P	—	PN3603	—	ON3162	ON3132
LN20CP	—	LN125D	—	LN9730	—	PN3609	—	ON3163	ON3133
LN24	LN247RP	LN126	—	LN9740	—	PN3610	—	ON3164	ON3134
LN34	LN347GP	LN126D	—	LN9805	—	PN3636	—	ON3301	—
LN50	LN66	LN161	—	PN100	PN110	ON1001	ON1002	ON3302	—
LN51FT	—	LN163	LN162S	PN104	—	ON1101	—	ON3500	—
LN51LT	—	LN164	—	PN105	—	ON1103	ON1122	ON3632W	—
LN53	LN57	LN174	—	PN110W	PN111	ON1104	ON1215	ON3633W	—
LN60	LN62S	LN181	—	PN112C	—	ON1106	ON1105	MEL4744	—
LN61	LN182-(SC)	LN182	—	PN140	PN147	ON1107	ON1215	MEL4745R	LN9705
LN61-C	LN182-(SC)	LN183HK	—	PN202	—	ON2160	—	MEL4760	PN300
LN64	—	LN191	—	PN204	PN207	ON3101	—	MEL4761	PN303
LN70	—	LN193(K)	—	PN268	PN268-SC	ON3102	—	MEL4776	—
LN71	—	LN193HK	—	PN302C	PN312C(N)	ON3105-V	—		
LN76	LN77L	LN194	—	PN302H	PN312C(N)	ON3110	—		
LN122	—	LN223CP	—	PN316C/K	PN316K2	ON3111	ON3131		
LN122D	—	LN223RP	—	PN316N	—	ON3112	ON3132		

Note) Alternative product is, almost alike in characteristics and function, not same in all respects. Please examine the content when you use.

memo

Matsushita Electronics Corporation
Semiconductor Group

Nagaokakyo, Kyoto, 617 Japan
Tel: (075) 951-8151

SALES OFFICES

■ U.S.A. SALES OFFICE

Panasonic Industrial Company [PIC]

- **Eastern Office**
  2 Panasonic Way, Secaucus, New Jersey 07094
  Tel: 201-348-5217
  Fax: 201-392-4652
- **Milpitas Office**
  1600 McCandless Drive, Milpitas, California 95035
  Tel: 408-945-5630
  Fax: 408-946-9063
- **Chicago Office**
  1707 N. Randall Road, Elgin, Illinois 60123-7847
  Tel: 847-468-5829
  Fax: 847-468-5725
- **Atlanta Office**
  1225 Northbrook Parkway, Suite 1-151,
  Suwanee, Georgia 30174
  Tel: 770-338-6940
  Fax: 770-338-6849

■ CANADA SALES OFFICE

Matsushita Electric of Canada Ltd. [MELCA]

5770 Ambler Drive Mississauga, Ontario, L4W 2T3
Tel: 905-624-5010
Fax: 905-624-9880

■ GERMANY SALES OFFICE

Panasonic Industrial Europe (Continental) [PIE(C)]

- **Head Office:**
  Winsbergring 15-22525 Hamburg
  Tel: 40-85492-048
  Fax: 40-85492-850
- **München Office.**
  Neukeferloh, Bretonischer Ring 6 85630 Grasbrunn
  Tel: 89-46007-156
  Fax: 89-46007-195

■ U.K. SALES OFFICE

Panasonic Industrial Europe (U.K.) [PIE(UK)]

- **Electric component Group**
  Willoughby Road, Bracknell, Berkshire RG12 8FP
  Tel: 1344-86-2444
  Fax: 1344-85-3313

■ FRANCE SALES OFFICE

Panasonic Industrial Europe (Continental) [PIE(C)]

- **Paris Office**
  270, Avenue de President Wilson
  93218 La Plaine Saint-Denis Cedex
  Tel: 331-4946-4300
  Fax: 331-4946-0010

■ ITALY SALES OFFICE

Panasonic Industrial Europe (Continental) [PIE(C)]

- **Milano Office:**
  Via Lucini N19, 20125 Milano
  Tel: 2-67-881
  Fax: 2-667-13316

■ TAIWAN SALES OFFICE

Panasonic Sales Taiwan Co., Ltd. [PST]

- **Head Office:**
  6th Floor, Tai Ping & First Building No. 550. Sec. 4,
  Chung Hsiao E. Rd. Taipei, 10516
  Tel: 2-757-1900
  Fax: 2-757-1906
- **Kaohsiung Office**
  6th Floor, Hsien 1st Road Kaohsiung
  Tel: 7-223-5815
  Fax: 7-224-8362

■ HONG KONG SALES OFFICE

Panasonic Shun Hing Industrial Sales (Hong Kong) CO., Ltd. [PSI(HK)]

3/F, Harcourt House. 39-40, Gloucester Road.
Wanchai, Hong Kong
Tel: 2861-2767
Fax: 2865-6706

■ SINGAPORE SALES OFFICE

Matsushita Denshi (S) Pte. Ltd. [MECS]

- **Head Office:**
  22, Ang Mo Kio, Industrial Park 2, Singapore 2056.
  Tel: 481-8811
  Fax: 481-6486

Panasonic Industry of Asia Company [PIA]

- **Head Office**
  300 Beach Road # 16-01,
  The Concourse Singapore 0719
  Tel: 225-0444
  Fax: 322-3997
- **Malaysia Office**
  40708 Shah Alam Selangor Darul Ehsan, Malaysia
  Tel: 3-541-6988
  Fax: 3-541-6979

■ CHINA SALES OFFICE

Panasonic SH Industrial Sales (Shenzhen) Co., Ltd. [PSI(SZ)]

Kin Chit Road, Shenzhen,
China Century Plaza Hotel No. 307
Tel: 755-234-4694
Fax: 755-234-4697

Matsushita Electric (China) Co., Ltd.

- **Shanghai Office**
  No.101 Shanghai Harbour Business Center, 628
  Dong Da Ming Road, Shanghai 200080
  Tel: 21-6546-7436
  Fax: 21-6546-7435

019710M Ⓐ

Printed in JAP

Pin Configuration

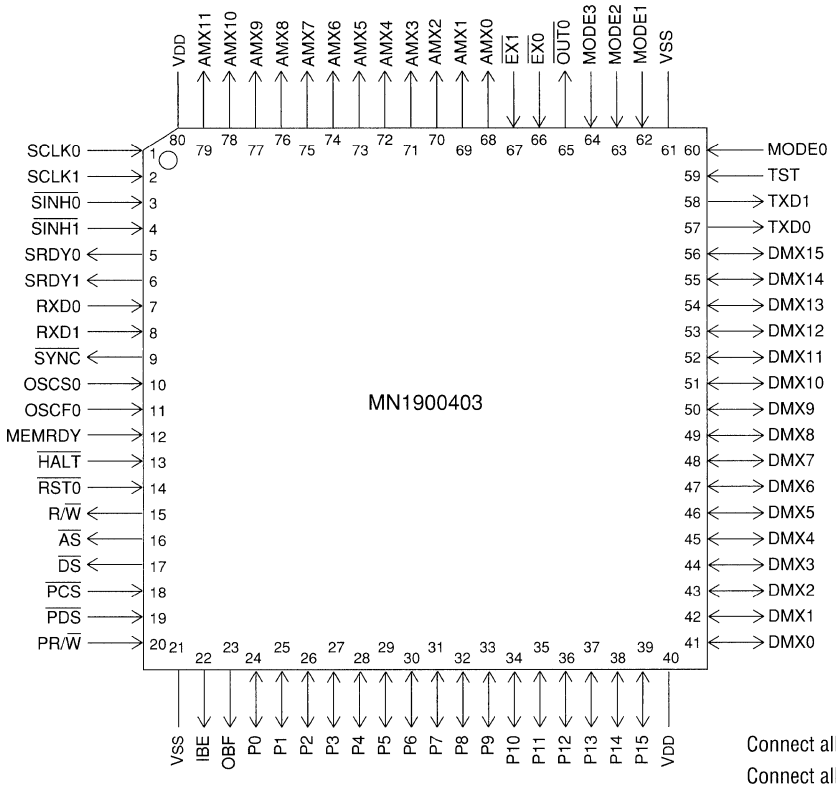

Connect all VDD externally.
Connect all VSS externally.

TQFP080-P-1212

❑ MN1900003

Type		**MN1900003**
Data Type		Pseudo 24-bit Fixed Point
Instruction	**Instruction ROM (word)**	External 64K (32-bit)
Data	**Data RAM1 (word)**	514 (16-bit)
	Data RAM2 (word)	Internal 2K, External 64K (16-bit) • For external **Memory Access Time** **30ns** **Wait 1 Wait** **20ns (at 100ns Operation)**
	RAM Pointer 1	10-bit x 1, Indirect addressing
	RAM Pointer 2	16-bit x 6, Indirect, Direct, Cyclic Addressing
Instruction Execution Time		High Speed Operation **100ns (at 4.75 to 5.25V, 50MHz)** Low Speed Operation **160μs (at 3.5 to 5.25V, 32kHz)**
Interrupts		• RESET • External • Overflow • I/O • DMA • NMI (For ICE) Multiplex Loop, Multiplex Sub-routine, Interrupts 7 levels in total (+NMI Interrupt 1 level)
I/O	**Serial Interfaces**	1 to 16-bit x 2
	Parallel Interfaces	16-bit x 1
	Special function	DMA 2ch
Calculation function	**Calculation Accuracy MUL**	20 x 20 → 32-bit
	Calculation Accuracy ALU	24-bit
	Barrel Shifter	32 → 24-bit (–16 to +15 Shift)
	General-use Register	24-bit x 4
	Max/min Value Set	Available
Package		PGA144-C-S15U
In-Circuit Emulator		MN1900003

Electrical Characteristics

Electrical Characteristics

Parameter	Symbol	Condition	Limit			Unit
			Min.	Typ.	Max.	
Supply Voltage	VDD	Connect all VDD and VSS Pins externally	4.75	5.0	5.25	V
	VSS					
Oscillation Frequency	fF				50	MHz
Machine Cycle	Tcyc		100		160×10^3	ns
Supply Current	IDD			80	150	mA
Power Consumption	Pt			400	788	mW

(Ta= –20 to +70°C)

Pin Configuration

.72	.75	.78	.80	.83	.86	.87	.89	.92	.93	.97	.99	.100	.104	.108	Q
.68	.71	.74	.76	.79	.82	.84	.88	.94	.95	.98	.101	.103	.107	.111	P
.64	.67	.70	.73	.77	.81	.85	.90	.91	.96	.102	.105	.106	.110	.114	N
.63	.65	.69										.109	.112	.116	M
.61	.62	.66										.113	.115	.119	L
.57	.59	.60										.117	.118	.122	K
.56	.58	.55										.121	.120	.123	J
.53	.52	.54										.126	.124	.125	H
.51	.48	.49										.127	.130	.128	G
.50	.46	.45										.132	.131	.129	F
.47	.43	.41										.138	.134	.133	E
.44	.40	.37										.141	.137	.135	D
.42	.38	.34	.33	.30	.24	.19	.18	.13	.9	.5	.1	.142	.139	.136	C
.39	.35	.31	.29	.26	.23	.22	.16	.12	.10	.7	.4	.2	.143	.140	B
.36	.32	.28	.27	.25	.21	.20	.17	.15	.14	.11	.8	.6	.3	.144	A
1	2	3	4	5	6	7	8	9	10	11	12	13	14	15	

1 st pin mark on the surface

wrong Insertion Proof Pin

(Bottom View)

PGA144-C-S15U

Pin No.	Pin Assignment	Pin name	Pin No.	Pin Assignment	Pin name	Pin No.	Pin Assignment	Pin name	Pin No.	Pin Assignment	Pin name
1	C12	VDD	37	D3	VSS	73	N4	AMX15	109	M13	DMI14
2	B13	SRDY0	38	C2	DMX8	74	P3	$\overline{\text{OUT0}}$	110	N14	DMI15
3	A14	SRDY1	39	B1	DMX9	75	Q2	$\overline{\text{EX1}}$	111	P15	DMI16
4	B12	RXD0	40	D2	DMX10	76	P4	$\overline{\text{EX0}}$	112	M14	DMI17
5	C11	RXD1	41	E3	DMX11	77	N5	$\overline{\text{NMI}}$	113	L13	DMI18
6	A13	$\overline{\text{PCS}}$	42	C1	DMX12	78	Q3	VSS	114	N15	DMI19
7	B11	$\overline{\text{PDS}}$	43	E2	DMX13	79	P5	AMI0	115	L14	DMI20
8	A12	PR/$\overline{\text{W}}$	44	D1	DMX14	80	Q4	AMI1	116	M15	DMI21
9	C10	IBE	45	F3	DMX15	81	N6	AMI2	117	K13	DMI22
10	B10	0BF	46	F2	TEST3	82	P6	AMI3	118	K14	DMI23
11	A11	P0	47	E1	TEST2	83	Q5	AMI4	119	L15	DMI24
12	B9	P1	48	G2	TEST1	84	P7	AMI5	120	J14	DMI25
13	C9	P2	49	G3	TEST0	85	N7	AMI6	121	J13	DMI26
14	A10	P3	50	F1	MODE3	86	Q6	AMI7	122	K15	DMI27
15	A9	P4	51	G1	MODE2	87	Q7	AMI8	123	J15	DMI28
16	B8	P5	52	H2	MODE1	88	P8	AMI9	124	H14	DMI29
17	A8	P6	53	H1	MODE0	89	Q8	AMI10	125	H15	DMI30
18	C8	P7	54	H3	S2	90	N8	AMI11	126	H13	DMI31
19	C7	P8	55	J3	S1	91	N9	AMI12	127	G13	$\overline{\text{SYNC}}$
20	A7	P9	56	J1	S0	92	Q9	AMI13	128	G15	OSCS0
21	A6	P10	57	K1	AMX0	93	Q10	AMI14	129	F15	OSCS1
22	B7	P11	58	J2	AMX1	94	P9	AMI15	130	G14	VDD
23	B6	P12	59	K2	AMX2	95	P10	DMI0	131	F14	OSCF0
24	C6	P13	60	K3	AMX3	96	N10	DMI1	132	F13	OSCF1
25	A5	P14	61	L1	AMX4	97	Q11	DMI2	133	E15	VSS
26	B5	P15	62	L2	AMX5	98	P11	DMI3	134	E14	MEMRDY
27	A4	TXD1	63	M1	AMX6	99	Q12	DMI4	135	D15	$\overline{\text{HALT}}$
28	A3	TXD0	64	N1	AMX7	100	Q13	DMI5	136	C15	$\overline{\text{RST0}}$
29	B4	DMX0	65	M2	VDD	101	P12	DMI6	137	D14	$\overline{\text{RST1}}$
30	C5	DMX1	66	L3	AMX8	102	N11	DMI7	138	E13	R/$\overline{\text{W}}$
31	B3	DMX2	67	N2	AMX9	103	P13	DMI8	139	C14	$\overline{\text{AS}}$
32	A2	DMX3	68	P1	AMX10	104	Q14	DMI9	140	B15	$\overline{\text{DS}}$
33	C4	DMX4	69	M3	AMX11	105	N12	DMI10	141	D13	SCLK0
34	C3	DMX5	70	N3	AMX12	106	N13	DMI11	142	C13	$\overline{\text{SINH0}}$
35	B2	DMX6	71	P2	AMX13	107	P14	DMI12	143	B14	SCLK1
36	A1	DMX7	72	Q1	AMX14	108	Q15	DMI13	144	A15	$\overline{\text{SINH1}}$

❑ MN1900011

Type		**MN1900011**
Data Type		Pseudo 24-bit Fixed Point
Instruction	**Instruction ROM (word)**	External 64K (32-bit)
Data	**Data RAM1 (word)**	1026 (16-bit)
	Data RAM2 (word)	Internal 3K, External 64K (16-bit) • For external **Memory Access Time** **30ns** **Wait 1 to 7 Wait** **20 to 140ns (at 100ns Operation)**
	RAM Pointer 1	10-bit x 1, Indirect addressing
	RAM Pointer 2	16-bit x 6, Indirect, Direct, Cyclic Addressing
Instruction Execution Time		High Speed Operation **100ns (at 4.75 to 5.25V, 50MHz)** Low Speed Operation **160μs (at 3.5 to 5.25V, 32kHz)**
Interrupts		• RESET • External • Overflow • I/O • DMA • NMI (For ICE) Multiplex Loop, Multiplex Sub-routine, Interrupts 7 levels in total (+NMI Interrupt 1 level)
I/O	**Serial Interfaces**	1 to 16-bit x 2
	Parallel Interfaces	16-bit x 1 (I/O port joint use)
	Special function	DMA 2ch
Calculation function	**Calculation Accuracy MUL**	20 x 20 → 32-bit
	Calculation Accuracy ALU	24-bit
	Barrel Shifter	32 → 24-bit (–16 to +15 Shift)
	General-use Register	24-bit x 4
	Max/min Value Set	Available
Package		PGA181-C-S15U
In-Circuit Emulator		PARTNER-ET1900011

Electrical Characteristics

Electrical Characteristics

Parameter	Symbol	Condition	Limit			Unit
			Min.	Typ.	Max.	
Supply Voltage	VDD	Connect all VDD and VSS Pins externally	4.75	5.0	5.25	V
	VSS					
Oscillation Frequency	fF				50	MHz
Machine Cycle	Tcyc		100		160×10^3	ns
Supply Current	IDD			80	150	mA
Power Consumption	Pt			400	788	mW

(Ta= –20 to +70°C)

※Self-oscillation is up to 30MHz. (Pay attention to the effect of substrate capacitance.)

Pin Configuration

.45	.49	.50	.51	.52	.53	.54	.83	.84	.85	.86	.87	.88	.89	.90	Q
.44	.38	.55	.56	.57	.58	.59	.76	.77	.78	.79	.80	.81	.82	.91	P
.43	.37	.32	.60	.61	.62	.63	.70	.71	.72	.73	.74	.75	.98	.92	N
.42	.36	.31	.27	.46	.47	.48	.64	.65	.66	.67	.69	.104	.99	.93	M
.41	.35	.30	.26	.	.	.	.68	.	.	.	.109	.105	.100	.94	L
.40	.34	.29	.25	.	.	.	.	.	.	.	.110	.106	.101	.95	K
.39	.33	.28	.24	.	.	.	.	.	.	.	.111	.107	.102	.96	J
.7	.13	.18	.22	.23	.	.	.	.	.	.113	.112	.108	.103	.97	H
.6	.12	.17	.21	.	.	.	.	.	.	.	.114	.118	.123	.129	G
.5	.11	.16	.20	.	.	.	.	.	.	.	.115	.119	.124	.130	F
.4	.10	.15	.19	.	.	.	.158	.	.	.	.116	.120	.125	.131	E
.3	.9	.14	.159	.157	.156	.155	.154	.138	.137	.136	.117	.121	.126	.132	D
.2	.8	.165	.164	.163	.162	.161	.160	.153	.152	.151	.150	.122	.127	.133	C
.1	.172	.171	.170	.169	.168	.167	.166	.149	.148	.147	.146	.145	.128	.134	B
.180	.179	.178	.177	.176	.175	.174	.173	.144	.143	.142	.141	.140	.139	.135	A
1	2	3	4	5	6	7	8	9	10	11	12	13	14	15	

(Bottom View)
PGA181-C-S15U

Pin No.	Pin Assignment	Pin name	Pin No.	Pin Assignment	Pin name	Pin No.	Pin Assignment	Pin name	Pin No.	Pin Assignment	Pin name	Pin No.	Pin Assignment	Pin name
1	B1	VDD	37	N2	TXD0	73	N11	AMX6	109	L12	AMI12	145	B13	DMI22
2	C1	CLKOUT	38	P2	DMX0	74	N12	AMX7	110	K12	AMI13	146	B12	DMI23
3	D1	W/$\overline{R}$	39	J1	DMX1	75	N13	—	111	J12	AMI14	147	B11	DMI24
4	E1	$\overline{AS1}$	40	K1	DMX2	76	P8	VSS	112	H12	AMI15	148	B10	DMI25
5	F1	$\overline{AS2}$	41	L1	DMX3	77	P9	AMX8	113	H11	—	149	B9	DMI26
6	G1	SSYNC0	42	M1	DMX4	78	P10	AMX9	114	G12	BMX2	150	C12	DMI27
7	H1	SSYNC1	43	N1	DMX5	79	P11	AMX10	115	F12	BMX1	151	C11	DMI28
8	C2	SRDY0	44	P1	DMX6	80	P12	AMX11	116	E12	BMX0	152	C10	DMI29
9	D2	SRDY1	45	Q1	DMX7	81	P13	AMX12	117	D12	OUT2	153	C9	DMI30
10	E2	RXD0	46	M5	VSS	82	P14	AMX13	118	G13	OUT1	154	D8	DMI31
11	F2	RXD1	47	M6	DMX8	83	Q8	AMX14	119	F13	—	155	D7	$\overline{SYNC}$
12	G2	$\overline{PCS}$	48	M7	DMX9	84	Q9	AMX15	120	E13	VDD	156	D6	OSCS0
13	H2	$\overline{PDS}$	49	Q2	DMX10	85	Q10	$\overline{READY}$	121	D13	DMI0	157	D5	OSCS1
14	D3	PR/$\overline{W}$	50	Q3	DMX11	86	Q11	$\overline{MON}$	122	C13	DMI1	158	E8	VSS
15	E3	IBE	51	Q4	DMX12	87	Q12	$\overline{RST2}$	123	G14	DMI2	159	D4	OSCF0
16	F3	OBF	52	Q5	DMX13	88	Q13	$\overline{RDYACK}$	124	F14	DMI3	160	C8	OSCF1
17	G3	—	53	Q6	DMX14	89	Q14	$\overline{RSTOUT}$	125	E14	DMI4	161	C7	VDD
18	H3	P0	54	Q7	DMX15	90	Q15	$\overline{VDD}$	126	D14	DMI5	162	C6	MEMRDY
19	E4	P1	55	P3	VDD	91	P15	$\overline{OUT0}$	127	C14	DMI6	163	C5	$\overline{HALT}$
20	F4	P2	56	P4	TEST3	92	N15	$\overline{EX1}$	128	B14	DMI7	164	C4	$\overline{RST0}$
21	G4	P3	57	P5	TEST2	93	M15	$\overline{EX0}$	129	G15	DMI8	165	C3	—
22	H4	P4	58	P6	TEST1	94	L15	NMI	130	F15	DMI9	166	B8	$\overline{RST1}$
23	H5	—	59	P7	TEST0	95	K15	VSS	131	E15	DMI10	167	B7	R/$\overline{W}$
24	J4	P5	60	N4	MODE3	96	J15	AMI0	132	D15	DMI11	168	B6	$\overline{AS}$
25	K4	P6	61	N5	MODE2	97	H15	AMI1	133	C15	DMI12	169	B5	$\overline{DS}$
26	L4	P7	62	N6	MODE1	98	N14	AMI2	134	B15	DMI13	170	B4	SCLK0
27	M4	P8	63	N7	MODE0	99	M14	AMI3	135	A15	VSS	171	B3	$\overline{SINH0}$
28	J3	P9	64	M8	S2	100	L14	AMI4	136	D11	VDD	172	B2	SCLK1
29	K3	—	65	M9	S1	101	K14	AMI5	137	D10	DMI14	173	A8	$\overline{SINH1}$
30	L3	P10	66	M10	S0	102	J14	AMI6	138	D9	DMI15	174	A7	$\overline{T12}$
31	M3	P11	67	M11	AMX0	103	H14	AMI7	139	A14	DMI16	175	A6	$\overline{T23}$
32	N2	P12	68	L8	AMX1	104	M13	AMI8	140	A13	DMI17	176	A5	$\overline{T34}$
33	J2	P13	69	M12	AMX2	105	L13	AMI9	141	A12	DMI18	177	A4	$\overline{T40}$
34	K2	P14	70	N8	AMX3	106	K13	AMI10	142	A11	DMI19	178	A3	$\overline{MRAMEN}$
35	L2	P15	71	N9	AMX4	107	J13	—	143	A10	DMI20	179	A2	$\overline{MONRDY}$
36	M2	TXD1	72	N10	AMX5	108	H13	AMI11	144	A9	DMI21	180	A1	VSS

❑ MN1901012

Type		**MN1901012**
Data Type		Pseudo 24-bit Fixed Point
Instruction	**Instruction ROM (word)**	10K (32-bit)
Data	**Data RAM1 (word)**	450 (16-bit)
	Data RAM2 (word)	Internal 1792, External 64K (16-bit) • For external **Memory Access Time** **19.8ns** **Wait 1 to 7 Wait** **16.6 to 116.2ns (at 83ns Operation)**
	Data ROM (word)	3.5K (16-bit) • Data ROM is mapped on the Address of RAM 2.
	RAM Pointer 1	10-bit x 1, Indirect addressing
	RAM Pointer 2	16-bit x 6, Indirect, Direct, Cyclic Addressing
	RAM Pointer	16-bit x 6, Indirect, Direct, Cyclic Addressing (common with RAM Pointer 2)
Instruction Execution Time		High Speed Operation **83ns (at 4.75 to 5.5V, 60MHz)**
Interrupts		• RESET • External • Overflow • I/O • DMA Multiplex Loop, Multiplex Sub-routine, Interrupts 7 levels in total
I/O	**Serial Interfaces**	1 to 16-bit x 2
	Parallel Interfaces	16-bit x 1 (I/O port joint use)
	Special function	DMA 2ch
Calculation function	**Calculation Accuracy MUL**	20 x 20 → 32-bit
	Calculation Accuracy ALU	24-bit
	Barrel Shifter	32 → 24-bit (–16 to +15 Shift)
	General-use Register	24-bit x 4
	Max/min Value Set	Available
Package		QFP100-P-1818
In-Circuit Emulator		PARTNER-ET 1900011
Evaluation Chip		MN1900011

Electrical Characteristics

Electrical Characteristics

Parameter	Symbol	Condition	Limit			Unit
			Min.	Typ.	Max.	
Supply Voltage	VDD	Connect all VDD and VSS Pins externally	4.75	5.0	5.5	V
	VSS					
Oscillation Frequency	fF		4		60	MHz
Machine Cycle	Tcyc		83		1250	ns
Supply Current	IDD			85	160	mA
Power Consumption	Pt			425	880	mW

(Ta= –20 to +70°C)

※Self-oscillation is up to 30MHz. (Pay attention to the effect of substrate capacitance.)

Pin Configuration

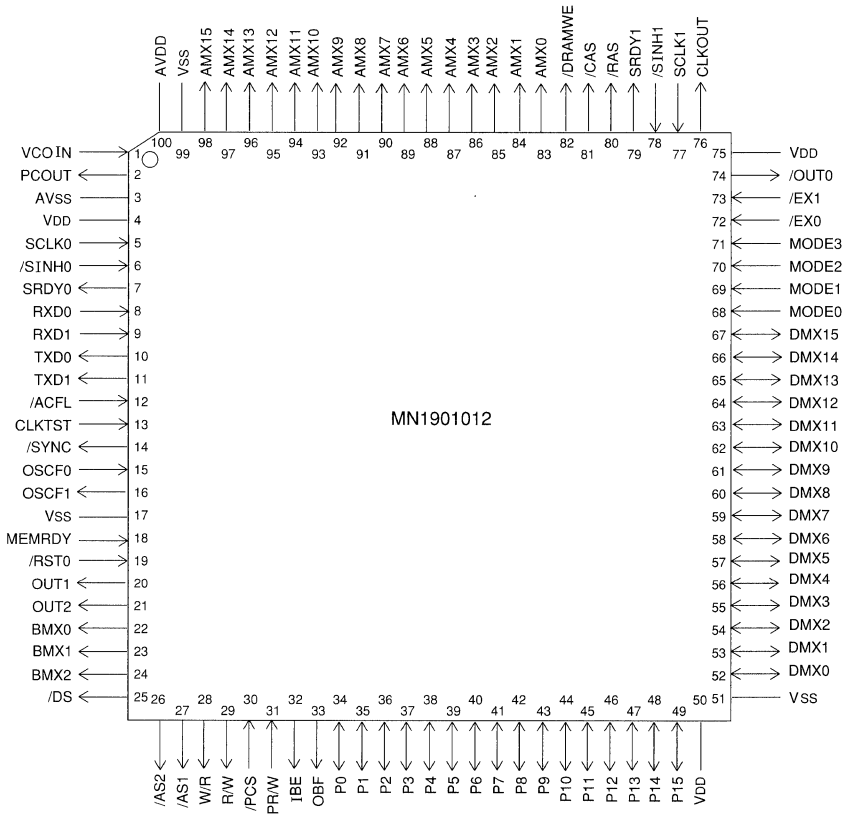

QFP100-P-1818

❑ MN1901611

Type		**MN1901611**
Data Type		Pseudo 24-bit Fixed Point
Instruction	**Instruction ROM (word)**	16K (32-bit)
Data	**Data RAM1 (word)**	514 (16-bit)
	Data RAM2 (word)	Internal 2.5K, External 64K (16-bit) • For external **Memory Access Time** **24.5ns** **Wait 1 to 7 Wait** **18.1 to 127.3ns (at 90.9ns Operation)**
	RAM Pointer 1	10-bit x 1, Indirect addressing
	RAM Pointer 2	16-bit x 6, Indirect, Direct, Cyclic Addressing
Instruction Execution Time		High Speed Operation **90.9ns (at 4.75 to 5.5V, 55MHz)** Low Speed Operation **160μs (at 3.5 to 5.5V, 32kHz)**
Interrupts		• RESET • External • Overflow • I/O • DMA Multiplex Loop, Multiplex Sub-routine, Interrupts 7 levels in total
I/O	**Serial Interfaces**	1 to 16-bit x 2
	Parallel Interfaces	16-bit x 1 (I/O port joint use)
	Special function	DMA 2ch
Calculation function	**Calculation Accuracy MUL**	20 x 20 → 32-bit
	Calculation Accuracy ALU	24-bit
	Barrel Shifter	32 → 24-bit (–16 to +15 Shift)
	General-use Register	24-bit x 4
	Max/min Value Set	Available
Package		QFH128-P-1818, QFP128-P-1818
In-Circuit Emulator		PARTNER-ET1900011
Evaluation Chip		MN1900011

Electrical Characteristics

Electrical Characteristics

Parameter	Symbol	Condition	Limit			Unit
			Min.	Typ.	Max.	
Supply Voltage	VDD	Connect all VDD and VSS Pins externally	4.75	5.0	5.5	V
	VSS					
Oscillation Frequency	fF				55	MHz
Machine Cycle	Tcyc		90.9		160×10^3	ns
Supply Current	IDD			80	150	mA
Power Consumption	Pt			400	825	mW

(Ta= –20 to +70°C)

※Self-oscillation is up to 30MHz. (Pay attention to the effect of substrate capacitance.)

Pin Configuration

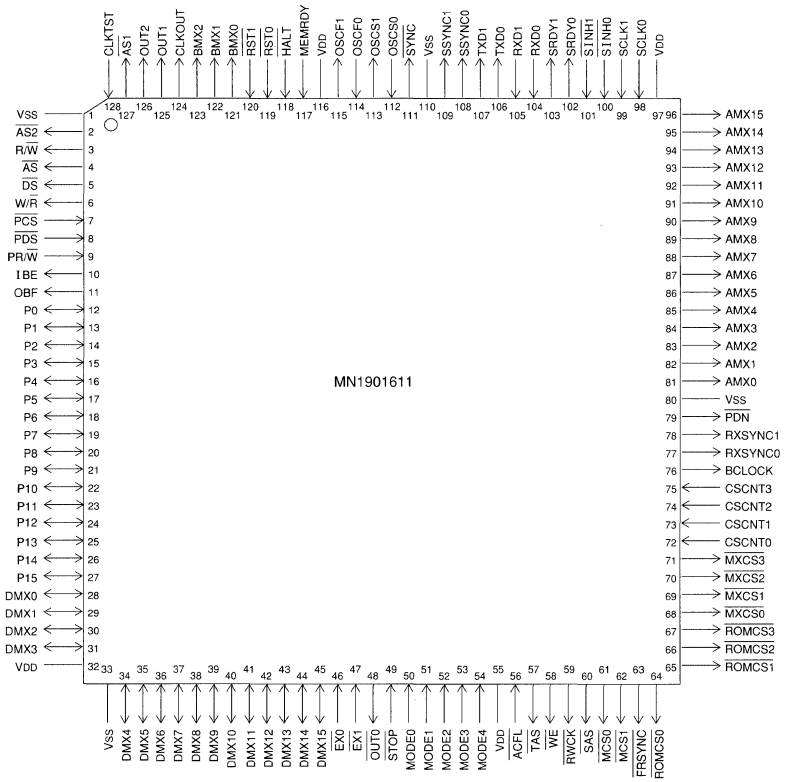

QFH128-P-1818 / QFP128-P-1818

❑ MN199001

Type		**MN199001**
Data Type		16-bit Fixed Point
Instruction	**Instruction ROM (word)**	2K, External 64K (32-bit)
Data	**Data RAM1 (word)**	96 (16-bit)
	Data RAM2 (word)	Internal 64, External 64K (16-bit) • For external **Memory Access Time** **25ns** **Wait 2 Wait** **50ns (at 100ns Operation)**
	RAM Pointer 1	RAM1, RAM2 joint use
	RAM Pointer 2	16-bit x 7, Indirect, Direct, Cyclic Addressing
Instruction Execution Time		High Speed Operation **100ns (at 4.75 to 5.25V, 40MHz)** Low Speed Operation —
Interrupts		• RESET • External EX0 Interrupt • External INT Interrupt • Overflow Interrupt • I/O Interrupt • DMA Multiplex Loop, Multiplex Sub-routine, Multiplex Interrupts Max 31 levels in total
I/O	**Serial Interfaces**	8/12/16-bit x 2
	Parallel Interfaces	16-bit x 1 (I/O port joint use)
	Special function	Pseudo SRAM Interface
Calculation function	**Calculation Accuracy MUL**	16 x 16 → 32-bit
	Calculation Accuracy ALU	32-bit
	Barrel Shifter	32 → 32-bit (–16 to +15 Shift)
	General-use Register	32-bit x 2
	Max/min Value Set	Available
Package		QFP100-P-1818
In-Circuit Emulator		ICE199001 (For 20MHz)
Evaluation Chip		MN199001
Notes		A/D, D/A Conversion built-in

Electrical Characteristics

Electrical Characteristics

Parameter	Symbol	Condition	Limit			Unit
			Min.	Typ.	Max.	
Supply Voltage	VDD		4.75	5.0	5.25	V
Oscillation Frequency	foscF				40	MHz
Machine Cycle	Tcyc		100			ns
Supply Current	IDD	fosc=40MHz		50	100	mA
Power Consumption	Pt	fosc=40MHz		250	525	mW

(Ta=25°C)

Pin Configuration

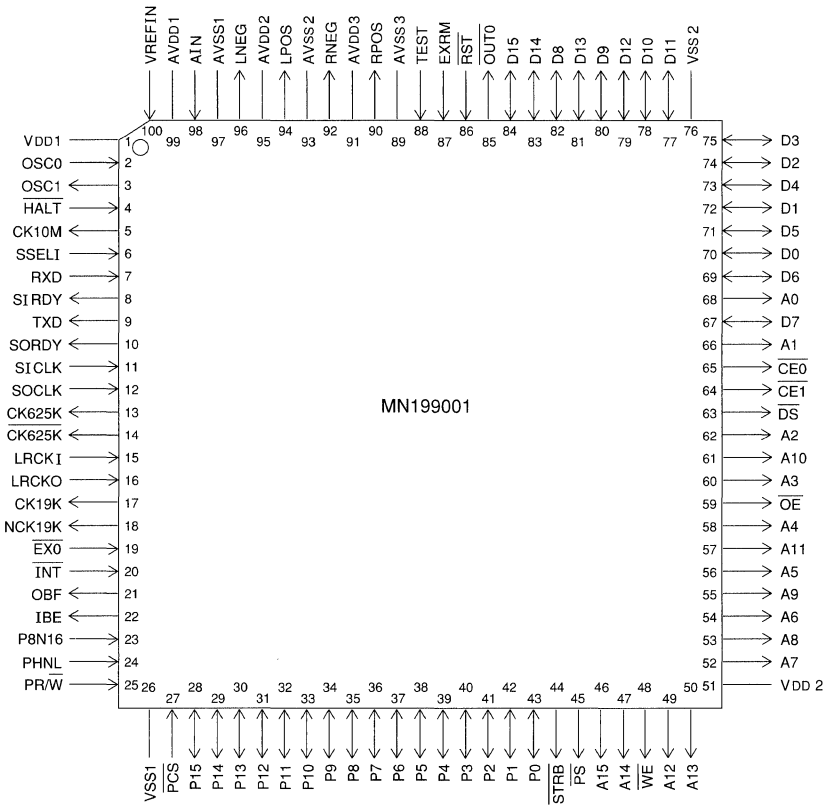

QFP100-P-1818

❑ MN1920802A [High Speed Version]

Type		**MN1920802A [High Speed Version]**
Data Type		24-bit Fixed Point
Instruction	**Instruction ROM (word)**	8K (40-bit)
Data	**Data RAM1 (word)**	514 (24-bit)
	Data RAM2 (word)	Internal 2K, External 16M (24-bit) • For external **Memory Access Time** **23ns: 1 Wait** **Wait 1 to 7 Wait** **20 to 140ns (at 80ns Operation)**
	RAM Pointer 1	10-bit x 3, Indirect addressing
	RAM Pointer 2	24-bit x 9, Indirect, Direct, Cyclic Addressing
Instruction Execution Time		High Speed Operation **80ns (at 4.75 to 5.25V, 50MHz)** Low Speed Operation **125μs (at 3.5 to 5.25V, 32kHz)**
Interrupts		• RESET • External Pin Interrupt; 3 kinds (EX0, EX1, UNMI) • Overflow • I/O • DMA • NMI (For ICE) Multiplex Loop, Multiplex Sub-routine, Multiplex Interrupts. 15 levels in total
I/O	**Serial Interfaces**	1 to 24-bit x 2
	Parallel Interfaces	24-bit x 1 (I/O port joint use)
	Special function	DMA 2ch
Calculation function	**Calculation Accuracy MUL**	24 x 24 → 48-bit
	Calculation Accuracy ALU	56-bit
	Barrel Shifter	56 → 56-bit (–32 to +31 Shift)
	General-use Register	56-bit x 4 x 2 Bank
	Max/min Value Set	Available
Package		QFP124-P-2828
In-Circuit Emulator		ICE1920802
Evaluation Chip		MN1920001

Electrical Characteristics

Electrical Characteristics

Parameter	Symbol	Condition	Limit			Unit
			Min.	Typ.	Max.	
Supply Voltage	VDD	Connect all VDD externally	4.75	5.0	5.25	V
Oscillation Frequency	fF		4		50	MHz
Machine Cycle	Tcyc		80		125×10^3	ns
Supply Current	IDD	foscF=50MHz, Without External Load		80	140	mA
Power Consumption	Pt			400	735	mW

(Ta= –20 to +70°C)

※Self-oscillation is up to 30MHz. (Pay attention to the effect of substrate capacitance.)

Pin Configuration

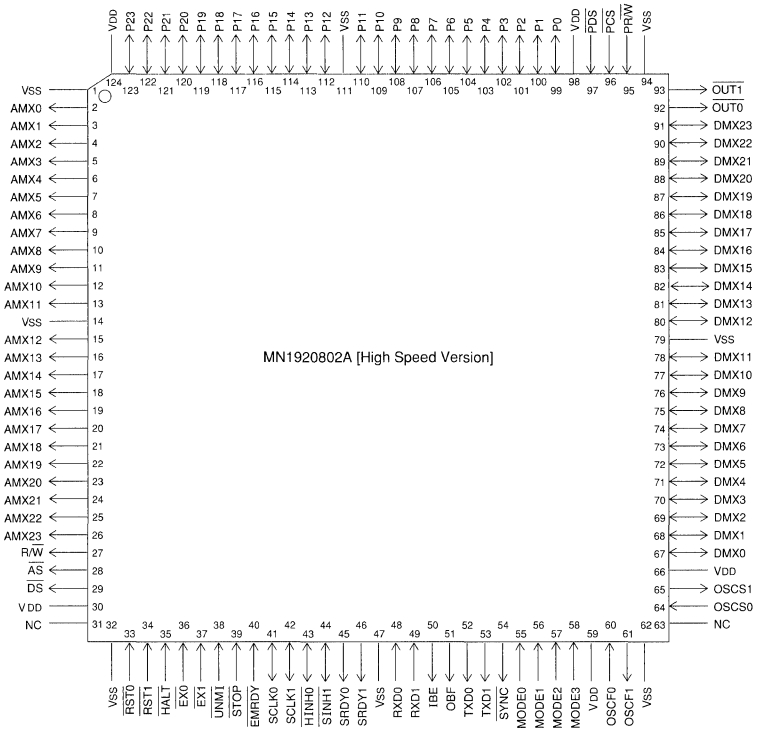

QFP124-P-2828

NC : Nothing connected with pin.

❑ MN1920001C [High Speed Version]

Type		**MN1920001C [High Speed Version] [ES (Engineering Sample) available]**
Data Type		24-bit Fixed Point
Instruction	**Instruction ROM (word)**	External 64K (40-bit)
Data	**Data RAM1 (word)**	514 (24-bit)
	Data RAM2 (word)	Internal 2.5K, External 16K (24-bit) • For external **Memory Access Time** **15ns** **Wait 1 to 7 Wait** **20 to 140ns (at 80ns Operation)**
	RAM Pointer 1	10-bit x 3, Indirect addressing
	RAM Pointer 2	24-bit x 9, Indirect, Direct, Cyclic Addressing
Instruction Execution Time		High Speed Operation **80ns (at 4.75 to 5.25V, 50MHz)** Low Speed Operation **125μs (at 3.5 to 5.25V, 32kHz)**
Interrupts		• RESET • External Pin Interrupt 3 kinds (EX0, EX1, UNMI) • Overflow • I/O • DMA • NMI (For ICE) Multiplex Loop, Multiplex Sub-routine, Interrupts 15 levels in total (+NMI Interrupt 1 level)
I/O	**Serial Interfaces**	1 to 24-bit x 2
	Parallel Interfaces	24-bit x 1 (I/O Pin joint use)
	Special function	DMA 2ch
Calculation function	**Calculation Accuracy MUL**	24 x 24 → 48-bit
	Calculation Accuracy ALU	56-bit
	Barrel Shifter	56 → 56-bit (-32 to +31 Shift)
	General-use Register	56-bit x 4 x 2 Bank
	Max/min Value Set	Available
Package		QFP208-P-2828
In-Circuit Emulator		ICE1920001

Electrical Characteristics

Electrical Characteristics

Parameter	Symbol	Condition	Limit			Unit
			Min.	Typ.	Max.	
Supply Voltage	VDD	Connect all VDD externally	4.75	5.0	5.25	V
Oscillation Frequency	fF		4		50	MHz
Machine Cycle	Tcyc		80		125×10^3	ns
Supply Current	IDD	foscF=50MHz Without External Load		80	140	mA
Power Consumption	Pt			400	735	mW

(Ta= −20 to +70°C)

※Self-oscillation is up to 30MHz. (Pay attention to the effect of substrate capacitance.)

Pin Configuration

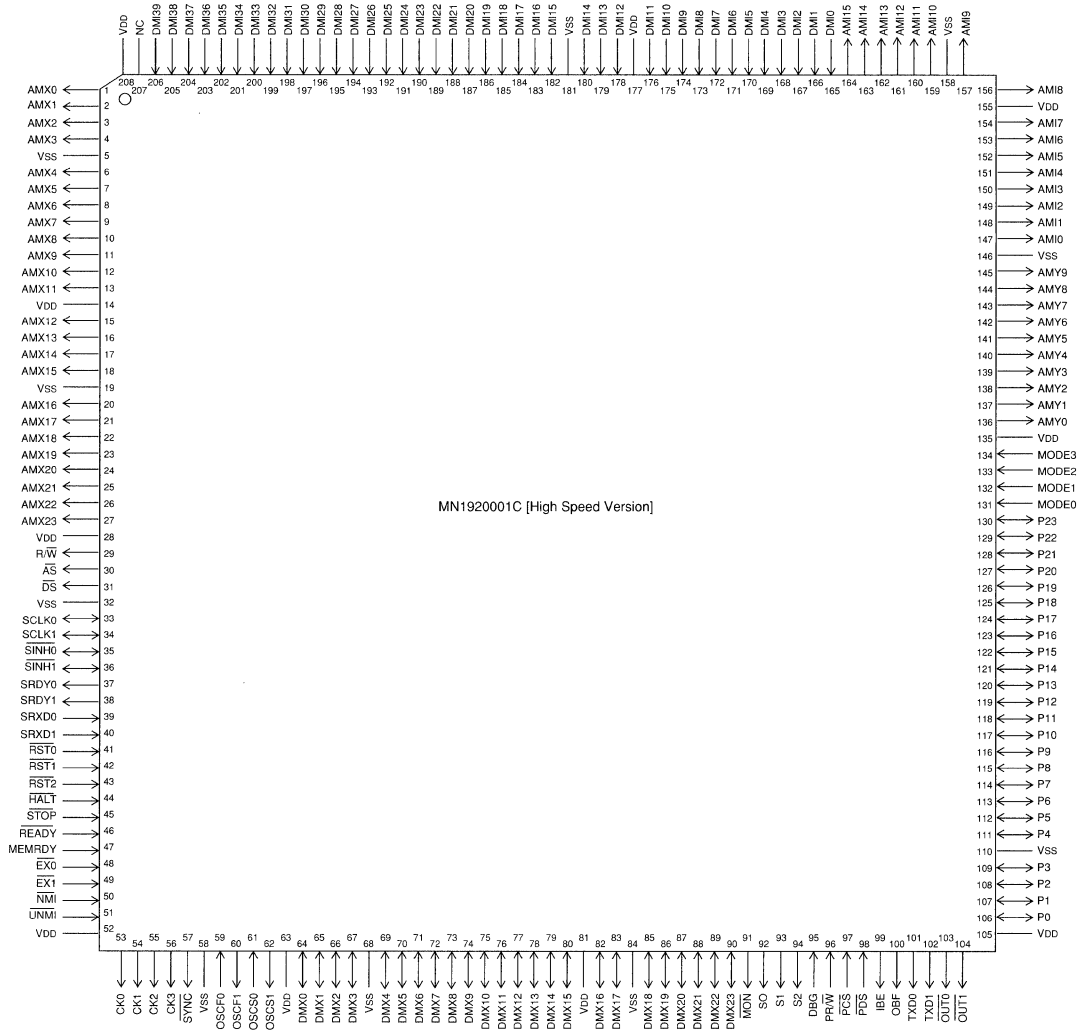

QFP208-P-2828

NC : Nothing connected with pin.

❑ MN1921003A [High Speed Version]

Type		**MN1921003A [High Speed Version]**
Data Type		24-bit Fixed Point
Instruction	**Instruction ROM (word)**	10K (40-bit)
Data	**Data RAM1 (word)**	514 (24-bit)
	Data RAM2 (word)	Internal 1K (24-bit), 1K (16-bit), External 16M (24-bit) • For external **Memory Access Time** **10ns: 1 Wait** **Wait 1 to 7 Wait** **17.5 to 122.5ns (at 70ns Operation)**
	RAM Pointer 1	10-bit x 3, Indirect addressing
	RAM Pointer 2	24-bit x 9, Indirect, Direct, Cyclic Addressing
Instruction Execution Time		High Speed Operation **70ns (at 4.75 to 5.25V, 57.1MHz)** Low Speed Operation —
Interrupts		• RESET • External Pin Interrupt 3 kinds (EX0, EX1, UNMI) • Overflow • I/O • DMA • NMI (For ICE) Multiplex Loop, Multiplex Sub-routine, Interrupts. 15 levels in total (+NMI Interrupt 1 level)
I/O	**Serial Interfaces**	1 to 24-bit x 2
	Parallel Interfaces	24-bit x 1 (I/O Port joint use)
	Special function	DMA 2ch, 64 multiplication PLL built-in
Calculation function	**Calculation Accuracy MUL**	24 x 24 → 48-bit
	Calculation Accuracy ALU	56-bit
	Barrel Shifter	56 → 56-bit (–32 to +31 Shift)
	General-use Register	56-bit x 4 x 2 Bank
	Max/min Value Set	Available
Package		QFP144-P-2020
In-Circuit Emulator		ICE1920802 (Used for the limited function)
Evaluation Chip		MN1920001

Electrical Characteristics

Electrical Characteristics

Parameter	Symbol	Condition	Limit			Unit
			Min.	Typ.	Max.	
Supply Voltage	VDD	Connect all VDD externally	4.75	5.0	5.25	V
Oscillation Frequency	fF		4		57.1	MHz
Machine Cycle	Tcyc	foscF=892.8kHz (With PLL)	70		$1x10^3$	ns
Supply Current	IDD	Without External Load		100	140	mA
Power Consumption	Pt			500	735	mW

(Ta= –20 to +70°C)

※Self-oscillation is up to 30MHz. (Pay attention to the effect of substrate capacitance.)

Pin Configuration

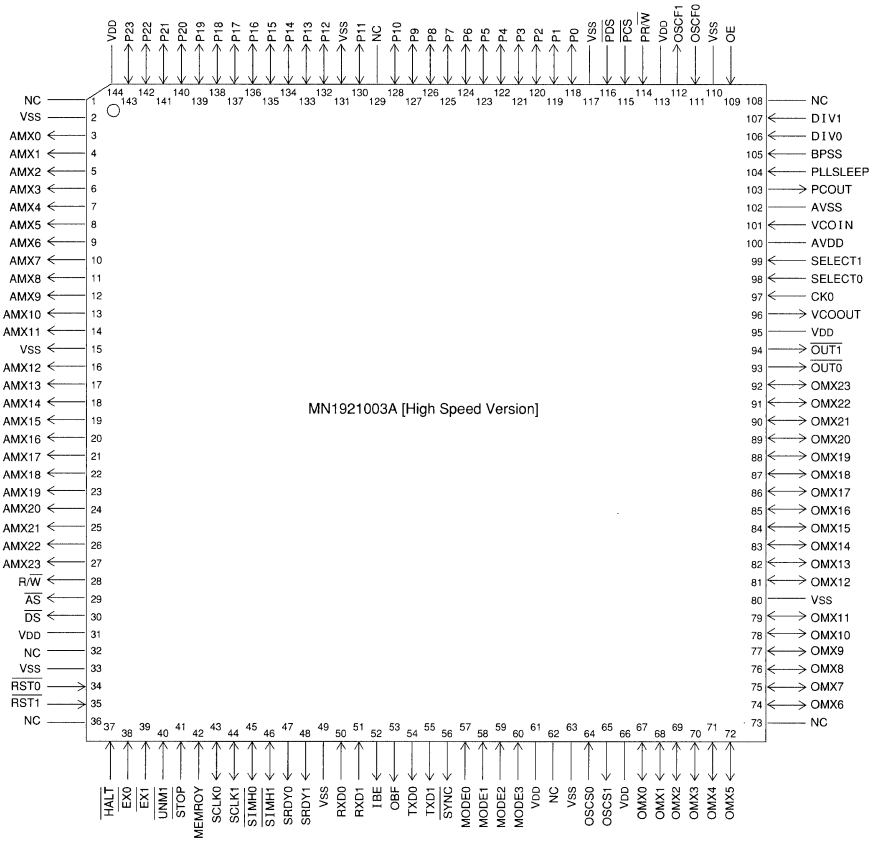

QFP144-P-2020

NC : Nothing connected with pin.

❑ MN1920811

Type		**MN1920811**
Data Type		16-bit Fixed Point
Instruction	**Instruction ROM (word)**	8K (32-bit)
Data	**Data RAM1 (word)**	2K (16-bit), Data ROM: 2.5K (16-bit)
	Data RAM2 (word)	512 (16-bit)
	RAM Pointer 1	13-bit x 9, Indirect, Direct, Initial Value Pointer increment
	RAM Pointer 2	9-bit x 6, Indirect, Initial Value Pointer increment
Instruction Execution Time		High Speed Operation **93ns (at 3.5 to 3.9V, 21.504MHz)** Low Speed Operation —
Interrupts		• RESET • External • Overflow • I/O • DMA Multiplex Loop, Multiplex Sub-routine, Interrupts 15 levels in total
I/O	**Serial Interfaces**	1 to 16-bit x 2
	Parallel Interfaces	16-bit x 1
	Special function	DMA 2ch
Calculation function	**Calculation Accuracy MUL**	16 x 16 → 32-bit
	Calculation Accuracy ALU	17-bit
	Barrel Shifter	32 → 17-bit (–32 to +31 Shift)
	General-use Register	16-bit x 8
	Max/min Value Set	Available
Package		LQFP128-P-1818
In-Circuit Emulator		ICE1920811
Evaluation Chip		MN1920811
Notes		Double Speed MAC (16 x 16 → 32, 32+40 → 40), Low Power Consumption

Electrical Characteristics

Electrical Characteristics

Parameter	Symbol	Condition	Limit			Unit
			Min.	Typ.	Max.	
Supply Voltage	VDD		3.5	3.7	3.9	V
Oscillation Frequency	foscf		4		21.739	MHz
Machine Cycle	Tcyc		92			ns
Supply Current	IDD	foscF=21.504MHz		25	50	mA
Power Consumption	Pt	At execution of VSELP, Without External Load		90	195	mW

(Ta= –20 to +70°C)

Pin Configuration

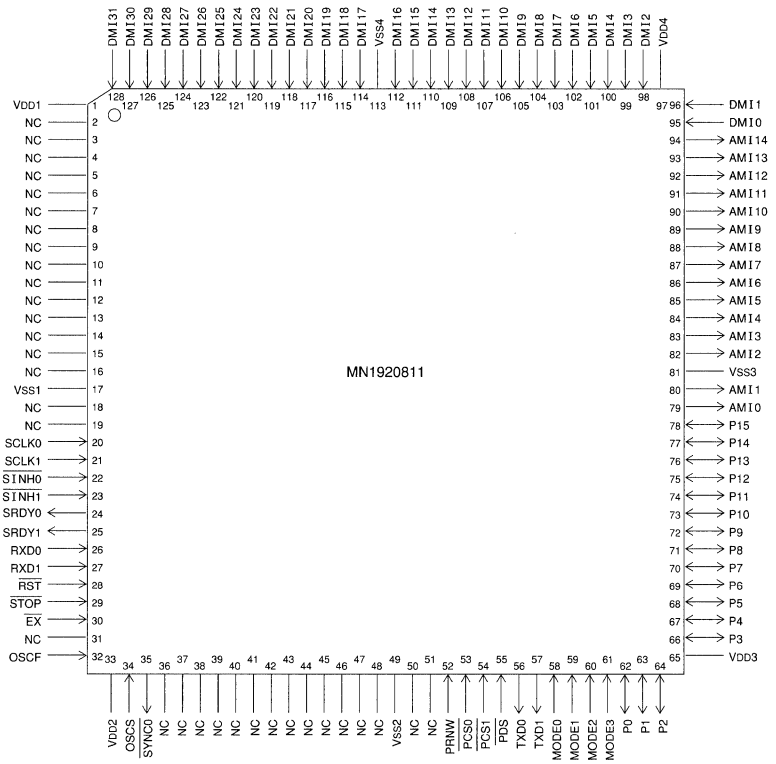

LQFP128-P-1818

NC : Nothing connected with pin.

❑ MN1920813

Type		**MN1920813**
Data Type		16-bit Fixed Point
Instruction	**Instruction ROM (word)**	8K (32-bit)
Data	**Data RAM1 (word)**	2K (16-bit) Data ROM: 2.5K (16-bit)
	Data RAM2 (word)	512 (16-bit)
	RAM Pointer 1	13-bit x 9, Indirect, Direct, Initial Value Pointer increment
	RAM Pointer 2	9-bit x 6, Indirect, Initial Value Pointer increment
Instruction Execution Time		High Speed Operation **92ns (at 3.5 to 3.9V, 21.739MHz), 68ns (at 4.5 to 5.5V, 29.4MHz)** Low Speed Operation **—**
Interrupts		• RESET • External • Overflow • I/O • DMA Multiplex Loop, Multiplex Sub-routine, Interrupts 15 levels in total
I/O	**Serial Interfaces**	1 to 16-bit x 2
	Parallel Interfaces	16-bit x 1
	Special function	DMA 2ch
Calculation function	**Calculation Accuracy MUL**	16 x 16 → 32-bit
	Calculation Accuracy ALU	17-bit
	Barrel Shifter	32 → 17-bit (–32 to +31 Shift)
	General-use Register	16-bit x 8
	Max/min Value Set	Available
Package		TQFP100-P-1414
In-Circuit Emulator		ICE1920811
Evaluation Chip		MN1920811
Notes		Double Speed MAC (16 x 16 → 32, 32+40 → 40), Low Power Consumption

Electrical Characteristics

Electrical Characteristics

Parameter	Symbol	Condition	Limit Min.	Limit Typ.	Limit Max.	Unit
Supply Voltage	VDD		3.5	3.7	3.9	V
			4.5	5.0	5.5	
Oscillation Frequency	foscf	VDD=3.5 to 3.9V	4		21.739	MHz
		VDD=4.5 to 5.5V	4		29.4	
Machine Cycle	Tcyc	VDD=3.5 to 3.9V, 21.739MHz	92			ns
		VDD=4.5 to 5.5V, 29.4MHz	68			
Supply Current	IDD	foscF=21.504MHz		25	50	mA
Power Consumption	Pt	At execution of VSELP, Without External Load		90	195	mW
Supply Current	IDD	foscF=28.57MHz		40	80	mA
Power Consumption	Pt	Without External Load		200	440	mW

(Ta= –20 to +70°C)

Pin Configuration

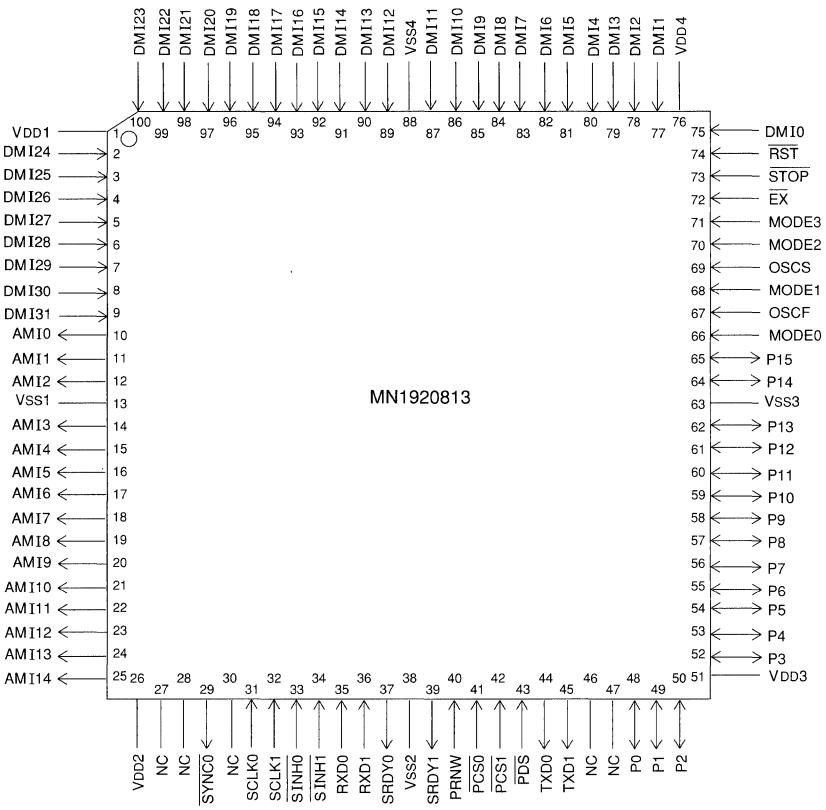

TQFP100-P-1414

NC : Nothing connected with pin.

❑ MN1921814

Type		**MN1921814**
Data Type		16-bit Fixed Point
Instruction	**Instruction ROM (word)**	8K (32-bit)
Data	**Data RAM1 (word)**	2.75K (16-bit), Data ROM: 2.5K (16-bit)
	Data RAM2 (word)	512 (16-bit)
	RAM Pointer 1	13-bit x 9, Indirect, Direct, Initial Value Pointer increment
	RAM Pointer 2	9-bit x 6, Indirect, Initial Value Pointer increment
Instruction Execution Time		High Speed Operation **92ns (at 3.5 to 3.9V, 21.739MHz), 68ns (at 4.5 to 5.5V, 29.4MHz)** Low Speed Operation —
Interrupts		• RESET • External • Overflow • I/O • DMA Multiplex Loop, Multiplex Sub-routine, Interrupts 15 levels in total
I/O	**Serial Interfaces**	1 to 16-bit x 2
	Parallel Interfaces	16-bit x 1
	Special function	DMA 2ch
Calculation function	**Calculation Accuracy MUL**	16 x 16 → 32-bit
	Calculation Accuracy ALU	17-bit
	Barrel Shifter	32 → 17-bit (–32 to +31 Shift)
	General-use Register	16-bit x 8
	Max/min Value Set	Available
Package		TQFP100-P-1414
In-Circuit Emulator		ICE1920811
Evaluation Chip		MN1920811
Notes		Double Speed MAC (16 x 16 → 32, 32+40 → 40), Low Power Consumption

Electrical Characteristics

Electrical Characteristics

Parameter	Symbol	Condition	Limit Min.	Limit Typ.	Limit Max.	Unit
Supply Voltage	VDD		3.5	3.7	3.9	V
			4.5	5.0	5.5	
Oscillation Frequency	foscF	VDD=3.5 to 3.9V	4		21.739	MHz
		VDD=4.5 to 5.5V	4		29.4	
Machine Cycle	Tcyc	VDD=3.5 to 3.9V, 21.739MHz	92			ns
		VDD=4.5 to 5.5V, 29.4MHz	68			
Supply Current	IDD	foscf=21.504MHz		25	50	mA
Power Consumption	Pt	At execution of VSELP, Without External Load		90	195	mW
Supply Current	IDD	foscF=28.57MHz		40	80	mA
Power Consumption	Pt	Without External Load		200	440	mW

(Ta= –20 to +70°C)

Pin Configuration

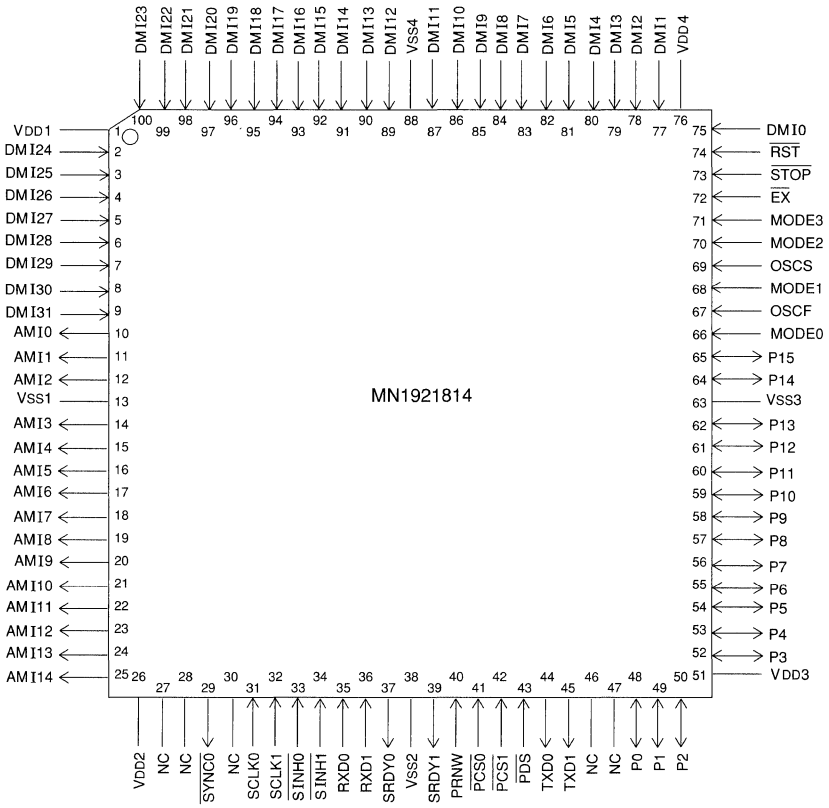

TQFP100-P-1414

NC : Nothing connected with pin.

❑ MN1921816

Type		**MN1921816**
Data Type		16-bit Fixed Point
Instruction	**Instruction ROM (word)**	18K (32-bit)
Data	**Data RAM1 (word)**	2.75K (16-bit) Data ROM: 2.5K (16-bit)
	Data RAM2 (word)	512 (16-bit)
	RAM Pointer 1	13-bit x 9, Indirect, Direct, Initial Value Pointer increment
	RAM Pointer 2	9-bit x 6, Indirect, Initial Value Pointer increment
Instruction Execution Time		High Speed Operation **92ns (at 2.7 to 3.3V, 21.739MHz)** Low Speed Operation —
Interrupts		• RESET • External • Overflow • I/O • DMA Multiplex Loop, Multiplex Sub-routine, Interrupts 15 levels in total
I/O	**Serial Interfaces**	1 to 16-bit x 2
	Parallel Interfaces	16-bit x 1
	Special function	DMA 2ch
Calculation function	**Calculation Accuracy MUL**	16 x 16 → 32-bit
	Calculation Accuracy ALU	17-bit
	Barrel Shifter	32 → 17-bit (–32 to +31 Shift)
	General-use Register	16-bit x 8
	Max/min Value Set	Available
Package		TQFP100-P-1414
In-Circuit Emulator		ICE1920811
Evaluation Chip		MN1920811
Notes		Double Speed MAC (16 x 16 → 32, 32+40 → 40), Low Power Consumption

Electrical Characteristics

Electrical Characteristics

Parameter	Symbol	Condition	Limit			Unit
			Min.	Typ.	Max.	
Supply Voltage	VDD		2.7	3.0	3.3	V
Oscillation Frequency	foscF	VDD=2.7 to 3.3V	4		21.739	MHz
Machine Cycle	Tcyc	VDD=2.7 to 3.3V, 21.739MHz	92			ns
Supply Current	IDD	foscF=21.504MHz At execution of VSELP, Without External Load		13.3	30	mA
Power Consumption	Pt			40	100	mW

(Ta= –20 to +70°C)

Pin Configuration

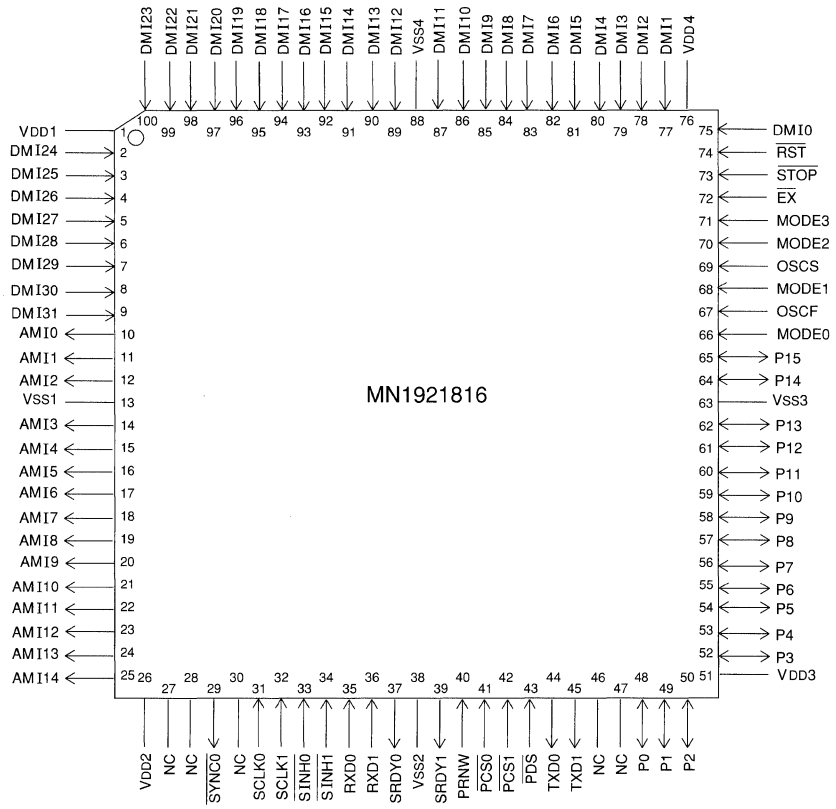

TQFP100-P-1414

NC : Nothing connected with pin.

❑ MN1932801

Type		**MN1932801**
Data Type		16-bit Fixed Point
Instruction	**Instruction ROM (word)**	28K (24-bit)
Data	**Data RAM (word)**	6K (16-bit), Data ROM: 30K (16-bit)
	RAM Pointer	16-bit x 10, Indirect, Direct, Initial Value Pointer increment, Cyclic Addressing • Bit Reverse
Instruction Execution Time		High Speed Operation **27ns (at 2.7 to 3.3V), 25ns (at 3.0 to 3.6V)** Low Speed Operation —
Interrupts		• RESET • External • Overflow • I/O • DMA • Timer Multiplex Loop, Multiplex Sub-routine, Interrupts 15 levels in total
I/O	**Serial Interfaces**	1 to 16-bit x 2
	Parallel Interfaces	16-bit x 1 General-use Output 16-bit General-use Input 4-bit
	Special function	DMA 2ch
Calculation function	**Calculation Accuracy MUL**	16 x 16 → 32-bit
	Calculation Accuracy ALU	16-bit
	Barrel Shifter	40 → 17-bit (–32 to +31 Shift)
	General-use Register	16-bit x 4
	Max/min Value Set	Available
Package		TQFP100-P-1414
In-Circuit Emulator		ICE1932801
Evaluation Chip		MN1932801
Notes		Double Speed MAC (16 x 16 → 32, 32+40 → 40), Low Power Consumption

Electrical Characteristics

Electrical Characteristics

Parameter	Symbol	Condition	Limit			Unit
			Min.	Typ.	Max.	
Supply Voltage	VDD		2.7	3.0	3.6	V
Input Clock Frequency*	fF	VDD=3.0 to 3.6V	65/N		80/N	MHz
		VDD=2.7 to 3.3V	60/N		74/N	MHz
Machine Cycle	tcyc	VDD=3.0 to 3.6V	25			ns
		VDD=2.7 to 3.3V	27			ns
Supply Current	IDD	tcyc=30.0ns		40	130	mA
Power Consumption	Pt	Without External Load		120	429	mW

(Ta= –20 to +70°C)

*N: PLL multiplication factor

Pin Configuration

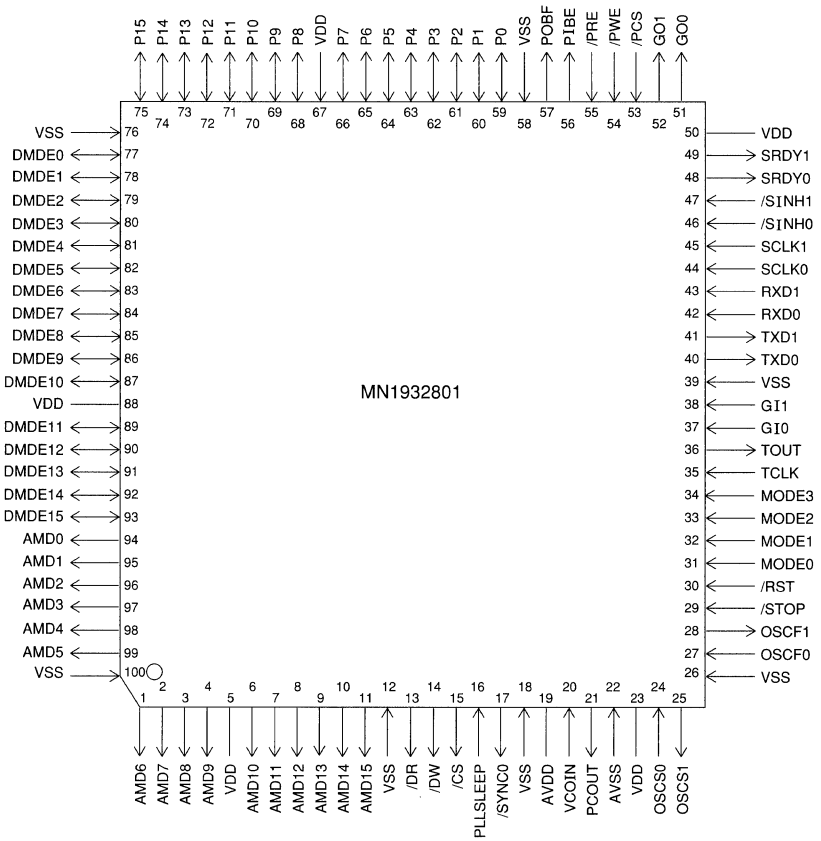

TQFP100-P-1414

❑ MN1933211

Type		**MN1933211**
Data Type		16-bit Fixed Point
Instruction	**Instruction ROM (word)**	32K (24-bit)
Data	**Data RAM (word)**	6K + 32 (16-bit) Data ROM: 30K (16-bit)
	RAM Pointer	16-bit x 10, Indirect, Direct, Initial Value Pointer increment, Cyclic Addressing • Bit Reverse
Instruction Execution Time		High Speed Operation **21.7ns (at 2.7 to 3.3V), 20ns (at 3.0 to 3.6V)** Low Speed Operation —
Interrupts		• RESET • External • Overflow • I/O • DMA • Timer Multiplex Loop, Multiplex Sub-routine, Interrupts 15 levels in total
I/O	**Serial Interfaces**	1 to 16-bit x 2
	Parallel Interfaces	16-bit x 1 General-use Output 16-bit General-use Input 4-bit
	Special function	DMA 2ch
Calculation function	**Calculation Accuracy MUL**	16 x 16 → 32-bit
	Calculation Accuracy ALU	16-bit
	Barrel Shifter	40 → 17-bit (–32 to +31 Shift)
	General-use Register	16-bit x 4
	Max/min Value Set	Available
Package		TQFP100-P-1212, TQFP100-P-1414
In-Circuit Emulator		ICE1933211
Evaluation Chip		MN1933211
Notes		Double Speed MAC (16 x 16 → 32, 32+40 → 40), Low Power Consumption

Electrical Characteristics

Electrical Characteristics

Parameter	Symbol	Condition	Limit			Unit
			Min.	Typ.	Max.	
Supply Voltage	VDD		2.7	3.0	3.6	V
Input Clock Frequency*1	fF	VDD=3.0 to 3.5V	72/N		100/N	MHz
		VDD=2.7 to 3.3V	64/N		92/N	MHz
Machine Cycle	tcyc	VDD ≥ 3.0V	20			ns
		VDD ≥ 2.7V	21.7			ns
Supply Current 1	IDD1	VDD=2.7 to 3.3V, tcyc=21.7ns		30*2	175	mA
Power Consumption1	Pt1	Without External Load			630	mW
Supply Current 2	IDD2	VDD=3.0 to 3.6V, tcyc=20ns			240	mA
Power Consumption2	Pt2	Without External Load			864	mW

(Ta= –20 to +70°C)

*1 N : PLL multiplication factor

*2 Values given are for machine cycle of 27ns at PSI-CELP voice coding execution

Pin Configuration

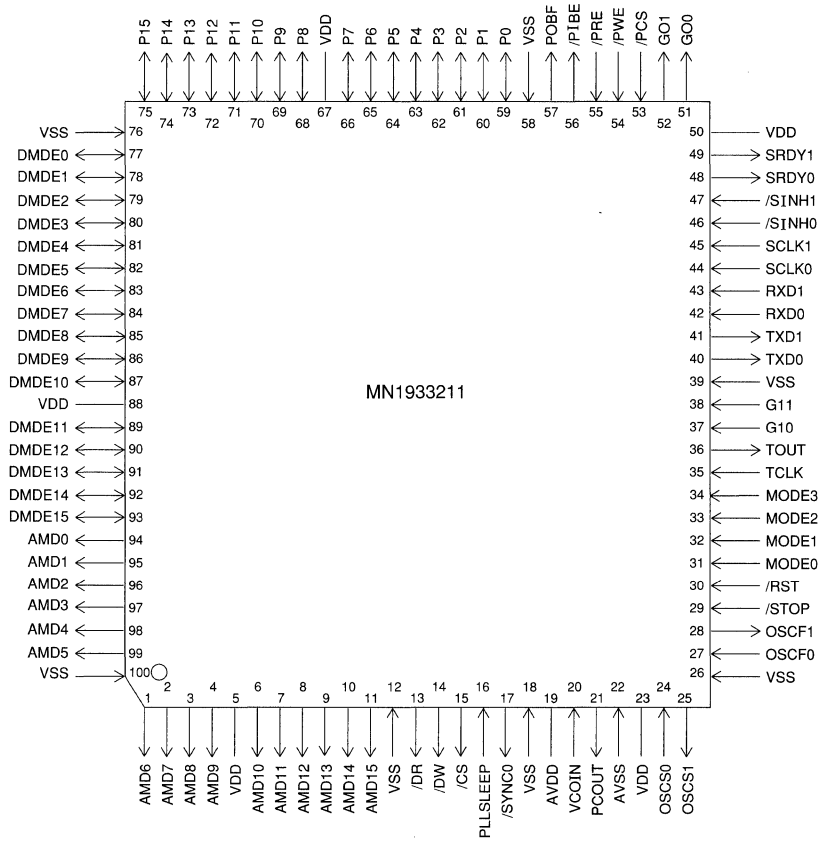

TQFP100-P-1212 / TQFP100-P-1414

❑ MN1931712

Type		**MN1931712**
Data Type		16-bit Fixed Point
Instruction	**Instruction ROM (word)**	17K (24-bit)
Data	**Data RAM (word)**	3.5K (16-bit) Data ROM: 5K (16-bit)
	RAM Pointer	16-bit x 10, Indirect, Direct, Initial Value Pointer increment, Cyclic Addressing • Bit Reverse
Instruction Execution Time		High Speed Operation **20ns (at 3.0 to 3.6V, 100MHz)** Low Speed Operation —
Interrupts		• RESET • External • Overflow • I/O • DMA • Timer Multiplex Loop, Multiplex Sub-routine, Interrupts 15 levels in total
I/O	**Serial Interfaces**	1 to 16-bit x 2
	Parallel Interfaces	16-bit x 1 General-use Output 16-bit General-use Input 4-bit
	Special function	DMA 2ch
Calculation function	**Calculation Accuracy MUL**	16 x 16 → 32-bit
	Calculation Accuracy ALU	16-bit
	Barrel Shifter	40 → 17-bit (–32 to +31 Shift)
	General-use Register	16-bit x 4
	Max/min Value Set	Available
Package		QFP100-P-1818B
In-Circuit Emulator		ICE1933211
Evaluation Chip		MN1933211
Notes		Double Speed MAC (16 x 16 → 32, 32+40 → 40), Low Power Consumption PCM-CODEC I/F, ADPCM I/F, Flash Memory I/F

Electrical Characteristics

Electrical Characteristics

Parameter	Symbol	Condition	Limit			Unit
			Min.	Typ.	Max.	
Supply Voltage	VDD		3.0	3.3	3.6	V
Input Clock Frequency*1	fF	VDD=3.0 to 3.6V	72/N		100/N	MHz
Machine Cycle	tcyc	VDD ≥ 3.0V	20			ns
Supply Current 1	IDD1	VDD=3.3V, tcyc=20ns Without External Load, Double-speed MAC 10% or less		45	128	mA
Power Consumption 1	Pt1			149*2	422	mW

(Ta= –20 to +70°C)

*1 N : PLL multiplication factor

*2 Values when using ADPCM at Ta=25°C, echo cancellation, DTMF

Pin Configuration

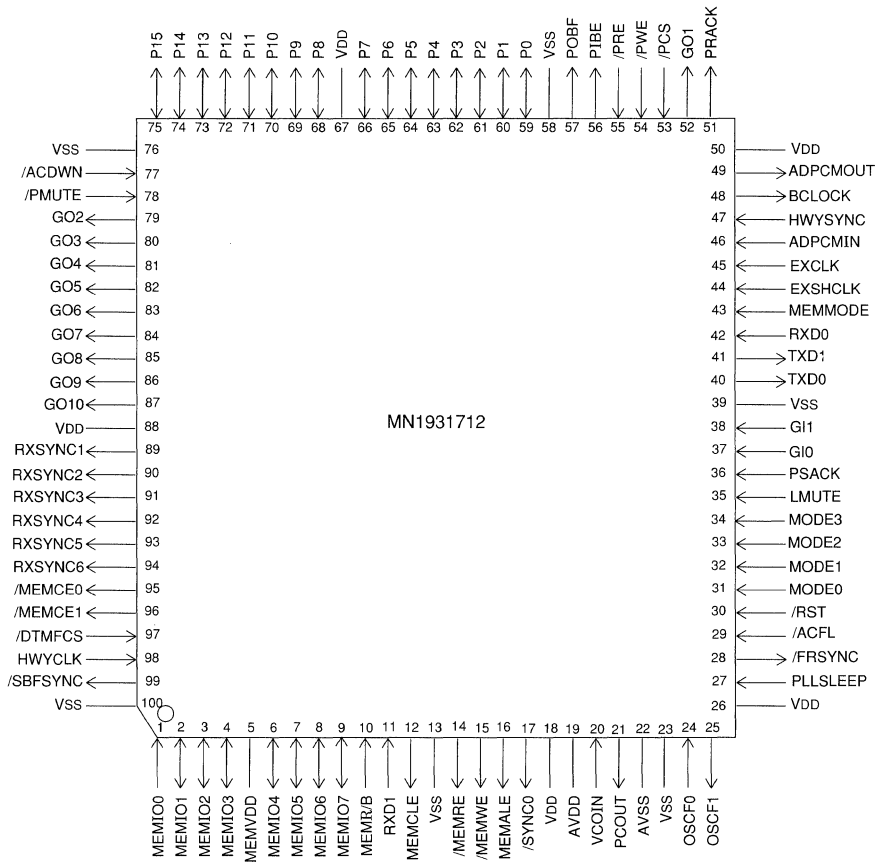

TQFP100-P-1212 / TQFP100-P-1414

ASP SERIES

MN1940 Series

The MN1940 Series includes program-controlled CMOS high-performance digital signal processors with optimum architecture for audio signal processing.

A multiplier, ALU, RAM, audio serial interface, and program RAM are integrated into a single chip.

Features

- **Audio Signal Processing Architecture**
  - 80 ns maximum execution speed.
  - Direct coupling to digital delay DRAM available.
  - Program loading to instruction RAM.
  - Setting of filter coefficient and digital delay time.
- **High-accuracy Operation Functions**
  - 24 x 16 → 40-bit multiplier 44-bit ALU
- **Audio Serial Interface**
  - Input: 2 ports (2 channels/port)
  - Output: 3 ports (2 channels/port)
  - I^2S/CD format switching for individual ports
  - Full 16/24 bit switching

■ **Applications**

ASP Series

❑ MN19411

Type		**MN19411**
Data Type		24-bit Fixed Point
Instruction	**Instruction ROM (word)**	192 (32-bit, On-chip RAM)
Data	**Data RAM1 (word)**	128 (16-bit)
	Data RAM2 (word)	Internal 128 (24-bit) / External 256K or 1M DRAM x 1 to 2 pieces • For external **Memory Access Time 80ns (f_{CLK}=25MHz)**
	RAM Pointer 1	7-bit x 1
	RAM Pointer 2	7-bit x 1 (Internal) 1 (External), Cyclic Addressing
Instruction Execution Time		High Speed Operation **80ns (at 4.5 to 5.5V, 25MHz)** Low Speed Operation
Interrupts		• RESET Multiplex Loop, Multiplex Sub-routine 2 levels in total
I/O	**Serial Interfaces**	16/24-bit (L, R) input x 2, output x 3
	Special function	Direct connection of DRAM for Digital Delay is available, I²C Interface built-in
Calculation function	**Calculation Accuracy MUL**	24 x 16 → 40-bit
	Calculation Accuracy ALU	44
	Barrel Shifter	40 → 40-bit / –4, 0, +1, +4 Shift
	Max/min Value Set	Available
Package		QFP064-P-1818
In-Circuit Emulator		Evaluation Board

Electrical Characteristics

Electrical Characteristics

Parameter	Symbol	Condition	Limit			Unit
			Min.	Typ.	Max.	
Supply Voltage	VDD	Connect respectively all VDD and VSS terminals externally	4.5	5.0	5.5	V
Oscillation Frequency	f_{CLK}		4		25	MHz
Machine Cycle	Tcyc		80		500	ns
Supply Current	IDD	f_{CLK}=24.5MHz, Ta=25°C		65	100	mA
Power Consumption	P_D				550	mW

(Ta= –20 to +70°C, VSS=0V)

Pin Configuration

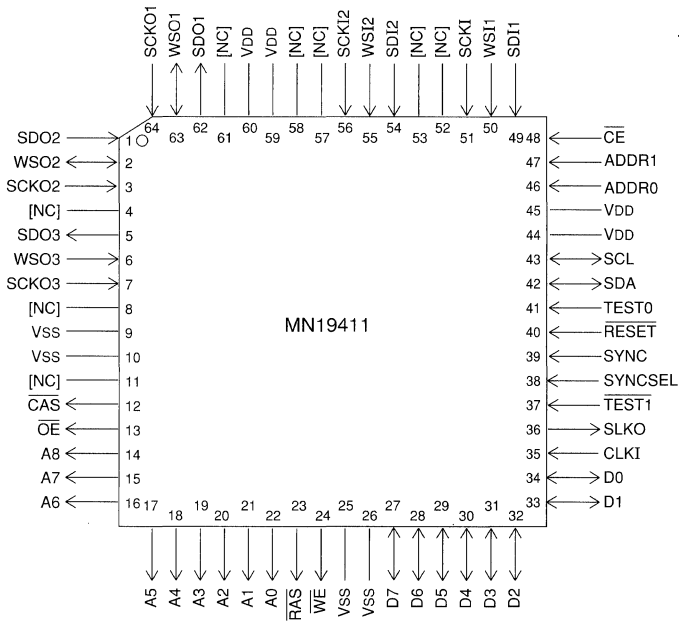

QFP064-P-1818

NC : Nothing connected with pin.

❑ MN19412A

Type		**MN19412A**
Data Type		24-bit Fixed Point
Instruction	**Instruction ROM (word)**	512 (32-bit, On-chip RAM)
Data	**Data RAM1 (word)**	256 (16-bit)
	Data RAM2 (word)	Internal 256 (24-bit) / External 256K or 1M DRAM x 1 to 2 pieces, 256K SRAM x 1 to 2 pieces • For external **Memory Access Time DRAM 80ns, SRAM 100ns (f_{osc}=40MHz)**
	RAM Pointer 1	8-bit x 2
	RAM Pointer 2	8-bit x 2 (Internal), 2 (External), Cyclic Addressing
Instruction Execution Time		High Speed Operation **50ns (at 4.75 to 5.25V, 40MHz)** Low Speed Operation —
Interrupts		• RESET • INT0 Interrupts • INT1 Interrupts Multiplex Loop, Multiplex Sub-routine, Interrupts 3 levels in total
I/O	**Serial Interfaces**	16/24-bit (L, R) input x 2, output x 3
	Parallel Interfaces	8-bit x 1
	Special function	Direct connection to DRAM, SRAM for Digital Delay is available, I²C Interface built-in
Calculation function	**Calculation Accuracy MUL**	24 x 16 → 40-bit
	Calculation Accuracy ALU	44
	Barrel Shifter	40 → 40-bit / 0, +1, +4 Shift, –32 to +31 Shift
	Max/min Value Set	Available
Package		QFP084-P-1818
In-Circuit Emulator		Evaluation Board

Electrical Characteristics

Electrical Characteristics

Parameter	Symbol	Condition	Limit			Unit
			Min.	Typ.	Max.	
Supply Voltage	VDD	fosc=4 to 40MHz	4.75	5.0	5.25	V
	VSS	Connect respectively all VDD and VSS terminals externally				
Oscillation Frequency	f_{osc}	VDD=4.75 to 5.25V	4		40	MHz
Machine Cycle	Tcyc		50		500	ns
Supply Current	IDD	f_{CLK}=40MHz, Ta=25°C		110	150	mA
Power Consumption	P_D				787.5	mW

(Ta= –20 to +70°C, VSS=0V)

Pin Configuration

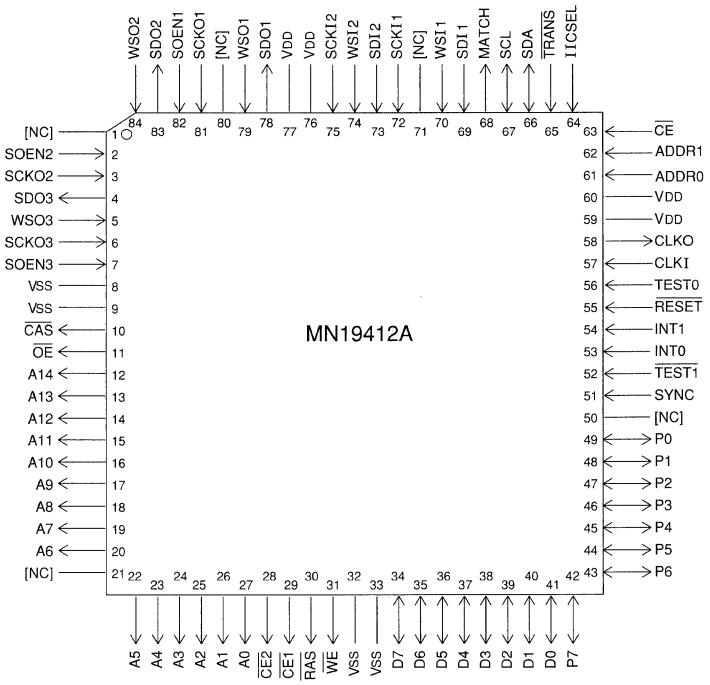

QFP084-P-1818

NC : Nothing connected with pin.

❑ MN19413

Type		**MN19413**
Data Type		24-bit Fixed Point
Instruction	**Instruction ROM (word)**	512 (32-bit, On-chip RAM)
Data	**Data RAM1 (word)**	256 (16-bit)
	Data RAM2 (word)	Internal 256 (24-bit) / External 256K or 1M or 4M DRAM x 1 to 2 pieces, 256K or 1M SRAM x 1 to 2 pieces • For external **Memory Access Time DRAM 80ns, SRAM 100ns (f_{osc}=20MHz)**
	RAM Pointer 1	8-bit x 2
	RAM Pointer 2	8-bit x 2 (Internal), 2 (External), Cyclic Addressing
Instruction Execution Time		High Speed Operation **50ns (at 4.75 to 5.25V, 20MHz)** Low Speed Operation —
Interrupts		• RESET • INT0 Interrupts • INT1 Interrupts Multiplex Loop, Multiplex Sub-routine, Interrupts 3 levels in total
I/O	**Serial Interfaces**	16/24-bit (L, R) input x 1, output x 2
	Parallel Interfaces	4-bit x 1
	Special function	Direct connection to DRAM, SRAM for Digital Delay is available, I²C Interface built-in
Calculation function	**Calculation Accuracy MUL**	24 x 16 → 40-bit
	Calculation Accuracy ALU	44
	Barrel Shifter	40 → 40-bit / 0, +1, +4 Shift, –32 to +31 Shift
	Max/min Value Set	Available
Package		QFP100-P-1818
In-Circuit Emulator		Evaluation Board

Electrical Characteristics

Electrical Characteristics

Parameter	Symbol	Condition	Limit			Unit
			Min.	Typ.	Max.	
Supply Voltage	VDD	fosc=2 to 20MHz	4.75	5.0	5.25	V
	VSS	Connect respectively all VDD and VSS terminals externally				
Oscillation Frequency	f_{osc}	VDD=4.75 to 5.25V	2		20	MHz
Machine Cycle	Tcyc		50		500	ns
Supply Current	IDD	f_{CLK}=20MHz, Ta=25°C		120	190	mA
Power Consumption	P_D				990	mW

(Ta= –20 to +70°C, VSS=0V)

Pin Configuration

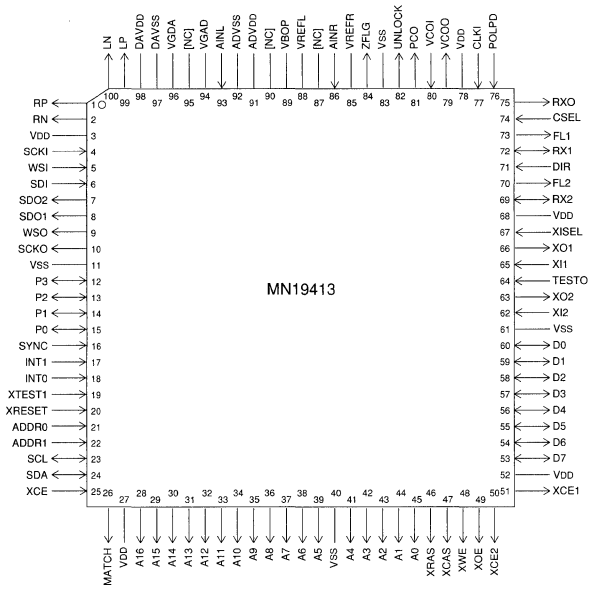

QFP100-P-1818

NC : Nothing connected with pin.

PACKAGE

Package

DIL Packages

Unit : mm

SDIP-022-P-0300

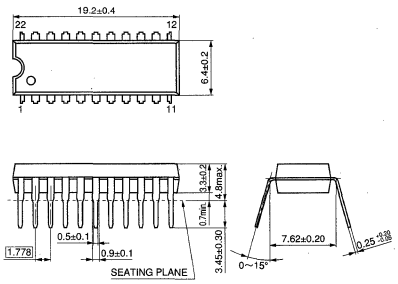

SDIP028-P-0400

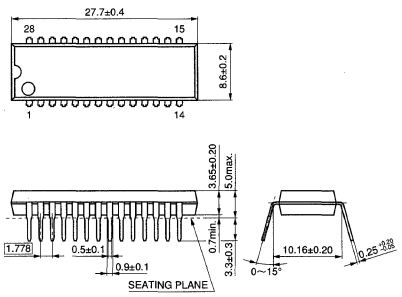

SDIP042-P-0600

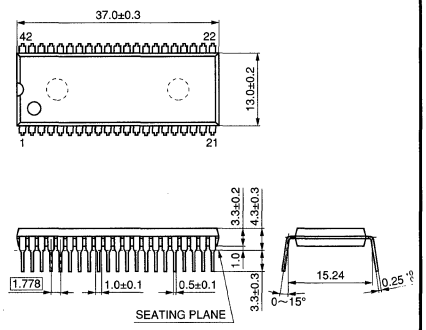

SDIP052-P-0600

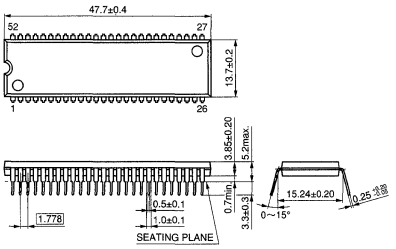

SDIP064-P-0750

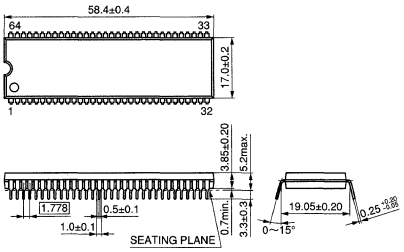

SO Packages

Unit : mm

SOP020-P-0300

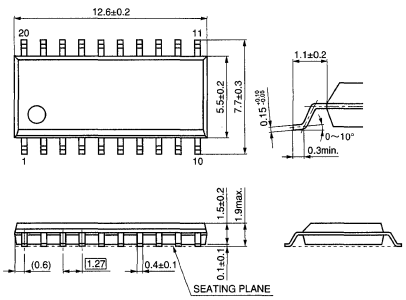

SOP028-P-0375

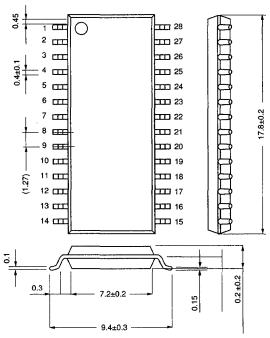

• Package Symbol : SDIP = Shrink Dual - In - Line Plastic Package
SOP = Small Out Line Package

About Package Symbol : The name conformed to EIAJ.

QFP / QFH / QFS / TQFP / LQFP Packages

Unit : mm

QFH032-P-0707

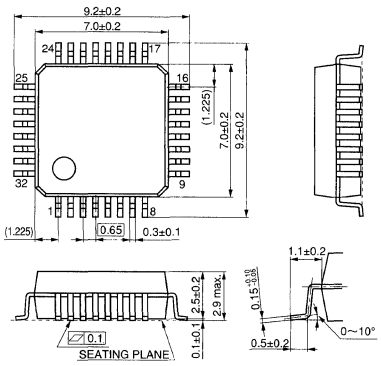

QFP044-P-1010

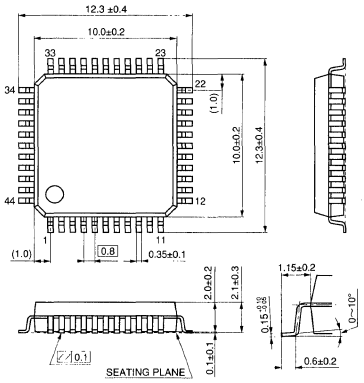

QFP064-P-1414

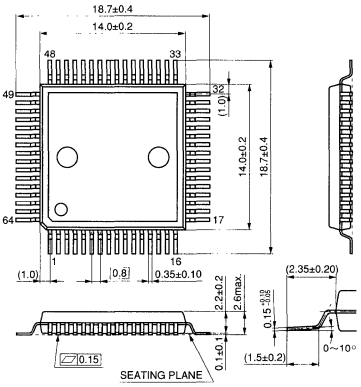

QFH064-P-1818

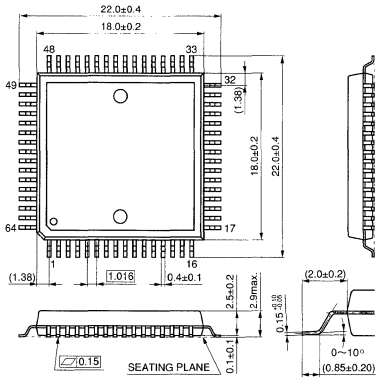

QFH064-P-1212

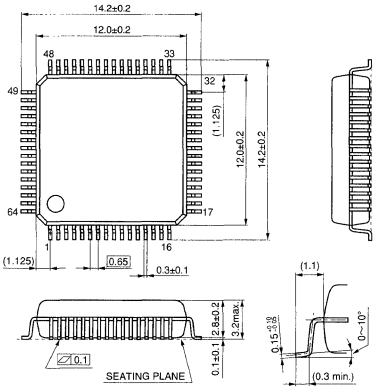

QFH064-P-1414B

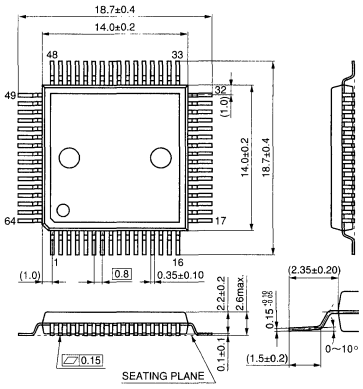

LQFP064-P-1414

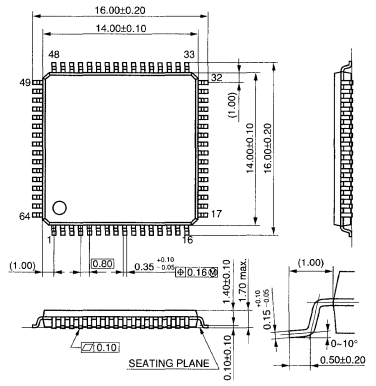

QFH080-P-1212

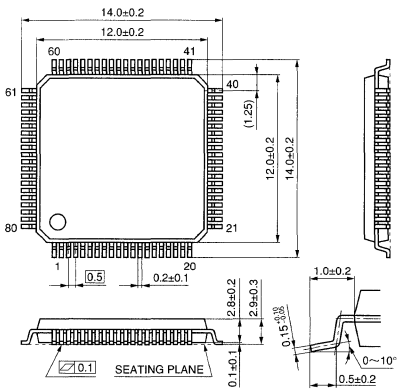

QFH080-P-1414

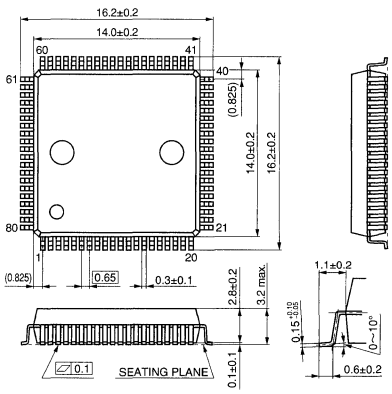

- Package Symbol : QFP = Quad Flat Package
  QFH = Quad Flat High Package
  LQFP = Low Profile Quad Flat Package

About Package Symbol : The name conformed to EIAJ.

QFP / QFS / TQFP / LQFP Packages

Unit : mm

QFS080-P-1414

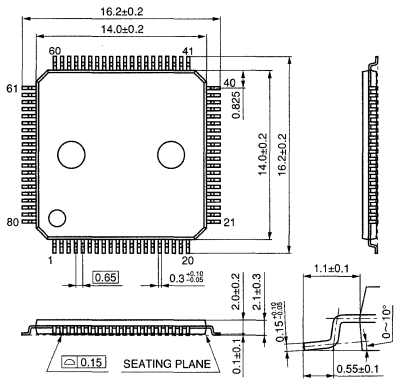

TQFP080-P-1212

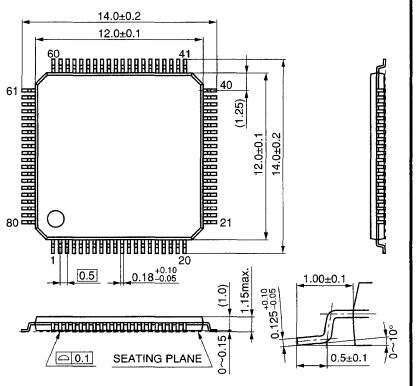

LQFP080-P-1414A

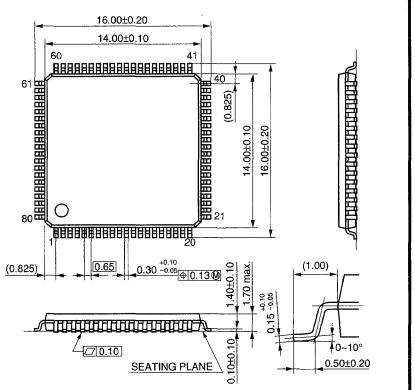

QFP084-P-1818

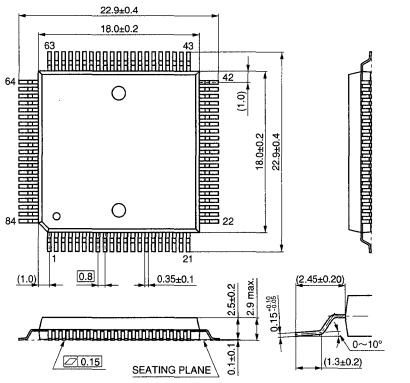

QFP084-P-1818E

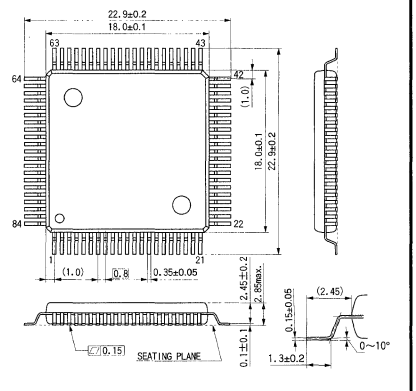

QFH084-P-1212

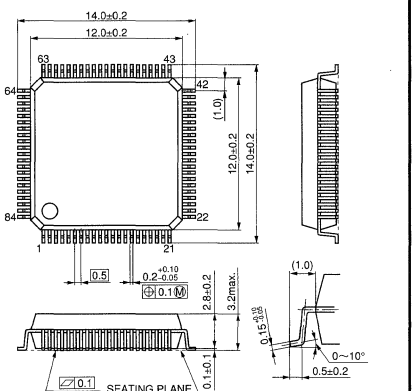

QFP100-P-1818

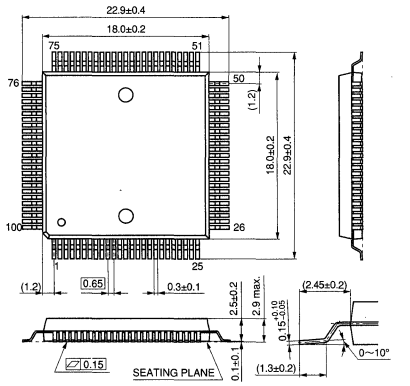

QFP100-P-1818B

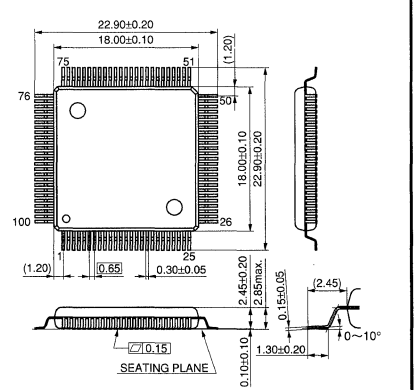

QFH100-P-1414

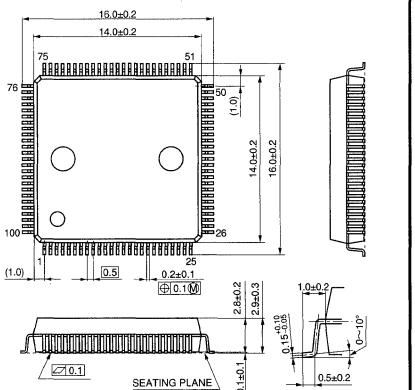

- Package Symbol : QFP = Quad Flat Package
  QFH = Quad Flat High Package
  QFS = Quad Flat L - Leaded Package, Small Package
  TQFP=Thin Quad Flat Package
  LQFP = Low Profile Quad Flat Package

About Package Symbol : The name conformed to EIAJ.

QFP / QFH / QFS / TQFP / LQFP Packages

Unit : mm

TQFP100-P-1212

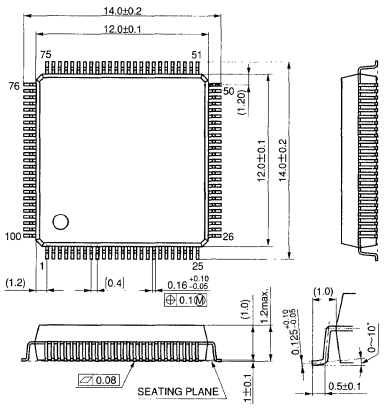

TQFP100-P-1414

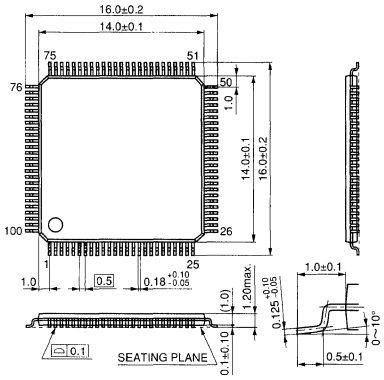

LQFP100-P-1414

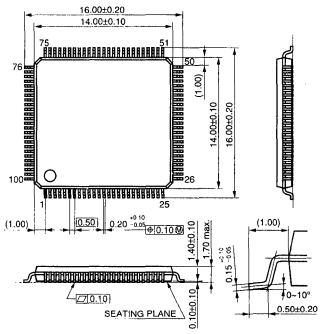

QFP124-P-2828

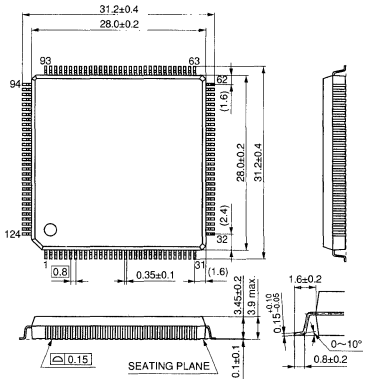

QFH128-P-1818

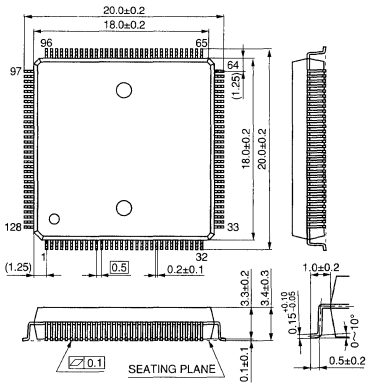

QFP128-P-1818

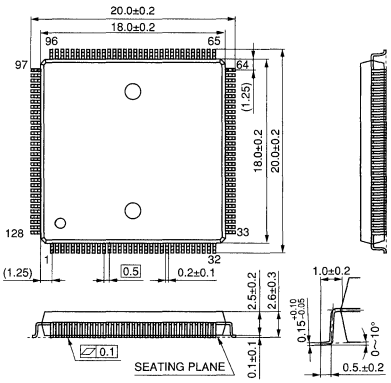

LQFP128-P-1818

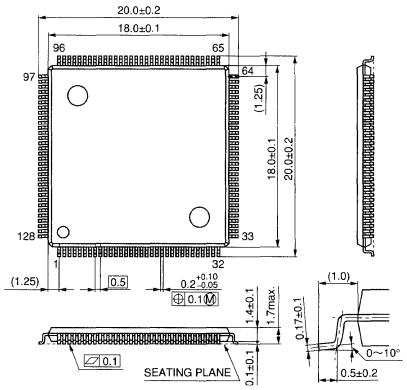

LQFP128-P-1818B

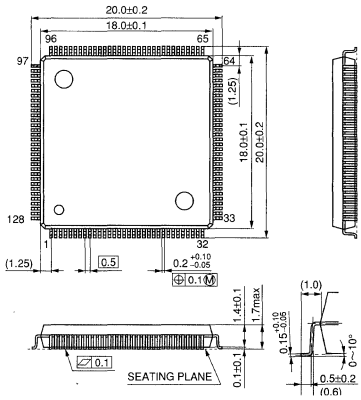

QFP144-P-2020

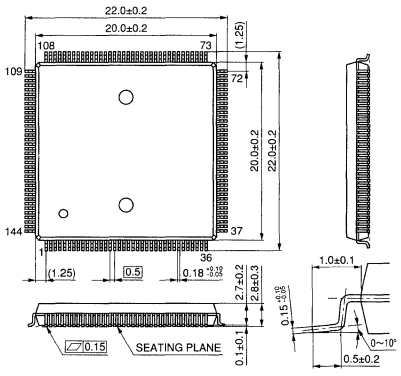

- Package Symbol : QFP = Quad Flat Package
  QFH = Quad Flat High Package
  TQFP =Thin Quad Flat Package
  LQFP=Low Profile Quad Flat Package

About Package Symbol : The name conformed to EIAJ.

QFP / QFH / QFS / TQFP / LQFP Packages Unit : mm

QFP160-P-2828B

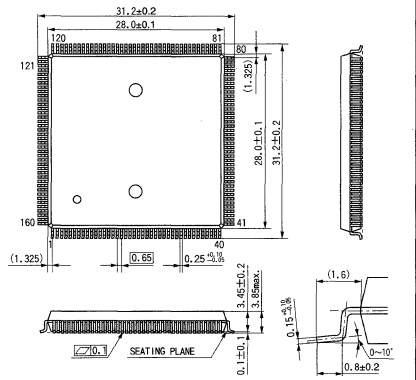

QFP208-P-2828

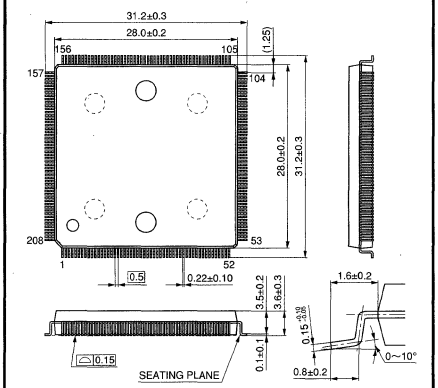

• Package Symbol : QFP = Quad Flat Package
About Package Symbol : The name conformed to EIAJ.

PGA Packages

Unit : mm

PGA144-C-S15U

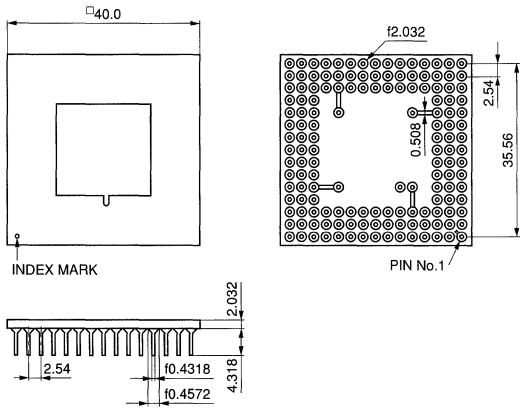

PGA181-C-S15U

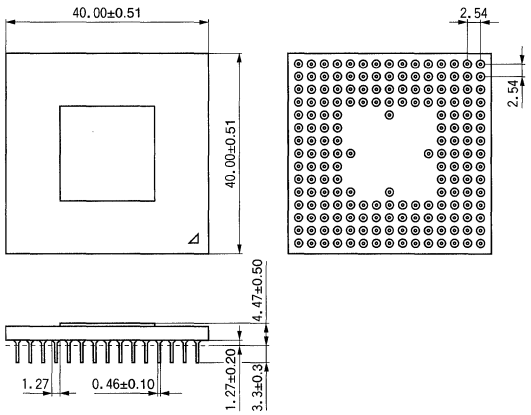

• Package Symbol : PGA = Pin Grid Array
About Package Symbol : The name conformed to EIAJ.

GLOSSARY

Glossary

— C —

■ CRTC

CRT Controller

— D —

■ DTMF

Dual Tone Multiple Frequency

— F —

■ FGICR

Frequency Generator ICR

■ FLP

Fluorescent Light Panel

■ FS

Frequency Synthesizer

— H —

■ HBS

Home Bus System

— I —

■ ICR

Input Capture Register

— L —

■ LCD

Liquid Crystal Display

■ LED

Light Emitting Diode

— O —

■ OCR

Output Compare Register

— P —

■ PLL

Phase Locked Loop

■ PWM

Pulse Width Modulaiton

— S —

■ S/H

Sample Hold

— U —

■ UART

Universal Asynchronous Receiver Transmitter

— V —

■ VF

Vacuum Fluorescent

■ VS

Voltage Synthesizer

Matsushita Electronics Corporation
Semiconductor Group

Nagaokakyo, Kyoto, 617 Japan
Tel: (075) 951-8151

SALES OFFICES

■ U.S.A. SALES OFFICE

Panasonic Industrial Company [PIC]

- **Eastern Office**
  2 Panasonic Way, Secaucus, New Jersey 07094
  Tel: 201-348-5217
  Fax: 201-392-4652
- **Milpitas Office**
  1600 McCandless Drive, Milpitas, California 95035
  Tel: 408-945-5630
  Fax: 408-946-9063
- **Chicago Office**
  1707 N. Randall Road, Elgin, Illinois 60123-7847
  Tel: 847-468-5829
  Fax: 847-468-5725
- **Atlanta Office**
  1225 Northbrook Parkway, Suite 1-151,
  Suwanee, Georgia 30174
  Tel: 770-338-6940
  Fax: 770-338-6849

■ CANADA SALES OFFICE

Matsushita Electric of Canada Ltd. [MELCA]

5770 Ambler Drive Mississauga, Ontario, L4W 2T3
Tel: 905-624-5010
Fax: 905-624-9880

■ GERMANY SALES OFFICE

Panasonic Industrial Europe (Continental) [PIE(C)]

- **Head Office:**
  Winsbergring 15-22525 Hamburg
  Tel: 40-85492-048
  Fax: 40-85492-850
- **München Office.**
  Neukeferloh, Bretonischer Ring 6 85630 Grasbrunn
  Tel: 89-46007-156
  Fax: 89-46007-195

■ U.K. SALES OFFICE

Panasonic Industrial Europe (U.K.) [PIE(UK)]

- **Electric component Group**
  Willoughby Road, Bracknell, Berkshire RG12 8FP
  Tel: 1344-86-2444
  Fax: 1344-85-3313

■ FRANCE SALES OFFICE

Panasonic Industrial Europe (Continental) [PIE(C)]

- **Paris Office**
  270, Avenue de President Wilson
  93218 La Plaine Saint-Denis Cedex
  Tel: 331-4946-4300
  Fax: 331-4946-0010

■ ITALY SALES OFFICE

Panasonic Industrial Europe (Continental) [PIE(C)]

- **Milano Office:**
  Via Lucini N19, 20125 Milano
  Tel: 2-67-881
  Fax: 2-667-13316

■ TAIWAN SALES OFFICE

Panasonic Sales Taiwan Co., Ltd. [PST]

- **Head Office:**
  6th Floor, Tai Ping & First Building No. 550. Sec. 4,
  Chung Hsiao E. Rd. Taipei, 10516
  Tel: 2-757-1900
  Fax: 2-757-1906
- **Kaohsiung Office**
  6th Floor, Hsien 1st Road Kaohsiung
  Tel: 7-223-5815
  Fax: 7-224-8362

■ HONG KONG SALES OFFICE

Panasonic Shun Hing Industrial Sales (Hong Kong) CO., Ltd. [PSI(HK)]

3/F, Harcourt House. 39-40, Gloucester Road.
Wanchai, Hong Kong
Tel: 2861-2767
Fax: 2865-6706

■ SINGAPORE SALES OFFICE

Matsushita Denshi (S) Pte. Ltd. [MECS]

- **Head Office:**
  22, Ang Mo Kio, Industrial Park 2, Singapore 2056.
  Tel: 481-8811
  Fax: 481-6486

Panasonic Industry of Asia Company [PIA]

- **Head Office**
  300 Beach Road # 16-01,
  The Concourse Singapore 0719
  Tel: 225-0444
  Fax: 322-3997
- **Malaysia Office**
  40708 Shah Alam Selangor Darul Ehsan, Malaysia
  Tel: 3-541-6988
  Fax: 3-541-6979

■ CHINA SALES OFFICE

Panasonic SH Industrial Sales (Shenzhen) Co., Ltd. [PSI(SZ)]

Kin Chit Road, Shenzhen,
China Century Plaza Hotel No. 307
Tel: 755-234-4694
Fax: 755-234-4697

Matsushita Electric (China) Co., Ltd.

- **Shanghai Office**
  No.101 Shanghai Harbour Business Center, 628
  Dong Da Ming Road, Shanghai 200080
  Tel: 21-6546-7436
  Fax: 21-6546-7435

019710M Ⓐ

Printed in JAPAN